CAT3637

6-Channel Programmable High Efficiency LED Driver

ON Semiconductor®

http://onsemi.com

TQFN−16
HV3 SUFFIX
CASE 510AD

Description

The CAT3637 is a high efficiency fractional charge pump that can drive up to six LEDs programmable by a 1−wire digital interface. The inclusion of a 1.33x fractional charge pump mode increases device efficiency by up to 10% over traditional 1.5x charge pumps with no added external capacitors.

Low noise input ripple is achieved by operating at a constant switching frequency which allows the use of small external ceramic capacitors. The multi−fractional charge pump supports a wide range of input voltages from 2.5 V to 5.5 V.

The EN/SET logic input functions as a chip enable and a digital programming interface for setting the current in the LED channels. The 1−wire pulse−programming interface supports 15 linear steps from zero current to 30 mA full−brightness in 2 mA steps.

The device is available in a tiny 16−pad TQFN 3 x 3 mm package with a maximum height of 0.8 mm.

ON Semiconductor's 1.33x, charge pump switching architecture is patented.

Features

- High Efficiency 1.33x Charge Pump
- Charge Pump: 1x, 1.33x, 1.5x, 2x
- Drives 6 LEDs Between 30 mA and 0 mA Each
- 1−wire EZDim™ Interface with 2 mA Step
- Power Efficiency up to 92%
- Low Noise Input Ripple in All Modes
- "Zero" Current Shutdown Mode
- Soft Start and Current Limiting
- Short Circuit Protection
- Thermal Shutdown Protection
- Tiny 3 mm x 3 mm, 16−pad TQFN Package
- These Devices are Pb−Free, Halogen Free/BFR Free and are RoHS Compliant

Applications

- LCD Display Backlight
- Cellular Phones
- Digital Still Cameras
- Handheld Devices

PIN CONNECTIONS

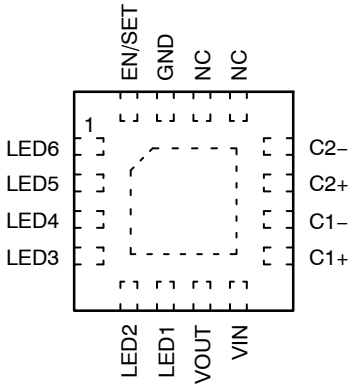

(Top View)

MARKING DIAGRAM

JAAM
AXXX
YWW

JAAM = CAT3637HV3−GT2
A = Assembly Location
XXX = Last Three Digits of Assembly Lot Number
Y = Production Year (Last Digit)
WW = Production Week (Two Digits)

ORDERING INFORMATION

Device	Package	Shipping†
CAT3637HV3−GT2 (Note 1)	TQFN−16 (Pb−Free)	2000 / Tape & Reel

†For information on tape and reel specifications, including part orientation and tape sizes, please refer to our Tape and Reel Packaging Specifications Brochure, BRD8011/D.

1. NiPdAu Plated Finish (RoHS−compliant).

© Semiconductor Components Industries, LLC, 2014

August, 2014 − Rev. 4

Publication Order Number:
CAT3637/D

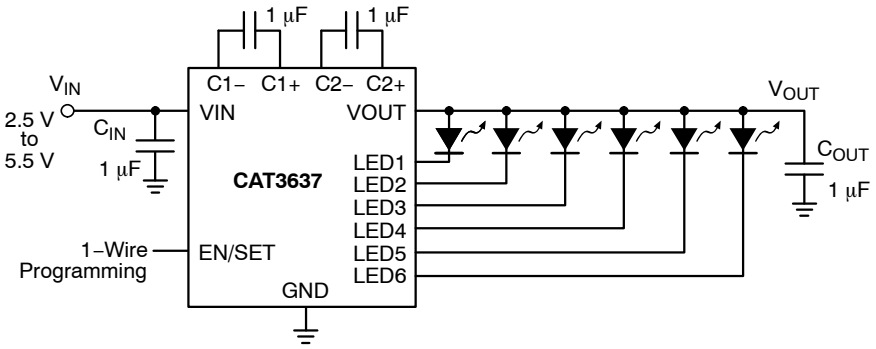

Figure 1. Typical Application Circuit

Table 1. ABSOLUTE MAXIMUM RATINGS

Parameter	Rating	Unit
VIN, LEDx, C1±, C2± voltage	6	V
VOUT Voltage	7	V
EN/SET Voltage	VIN + 0.7 V	V
Storage Temperature Range	−65 to +160	°C
Junction Temperature Range (Note 2)	−40 to +150	°C
Lead Temperature	300	°C

Stresses exceeding those listed in the Maximum Ratings table may damage the device. If any of these limits are exceeded, device functionality should not be assumed, damage may occur and reliability may be affected.

Table 2. RECOMMENDED OPERATING CONDITIONS

Parameter	Range	Unit
VIN	2.5 to 5.5	V
Ambient Temperature Range (Note 2)	−40 to +85	°C
I_{LED} per LED pin	0 to 30	mA
Total Output Current	0 to 180	mA

Functional operation above the stresses listed in the Recommended Operating Ranges is not implied. Extended exposure to stresses beyond the Recommended Operating Ranges limits may affect device reliability.

2. Package thermal resistance is below 50°C/W when mounted on FR4 board.

Table 3. ELECTRICAL OPERATING CHARACTERISTICS

(over recommended operating conditions unless specified otherwise) V_{IN} = 3.6 V, EN = High, T_{AMB} = 25°C

Symbol	Name	Conditions	Min	Typ	Max	Units
I_Q	Quiescent Current	1x mode, V_{IN} = 4.2 V 1.33x mode, V_{IN} = 3.3 V 1.5x mode, V_{IN} = 2.8 V 2x mode, V_{IN} = 2.5 V		1.5 2.8 3.7 3.8		mA
I_{QSHDN}	Shutdown Current	V_{EN} = 0 V			1	μA
$I_{LED-ACC}$	LED Current Accuracy	2 mA ≤ I_{LED} ≤ 30 mA		±3		%
$I_{LED-DEV}$	LED Channel Matching	$\frac{I_{LED} - I_{LEDAVG}}{I_{LEDAVG}}$		±1		%
R_{OUT}	Output Resistance (open loop)	1x mode, I_{OUT} = 120 mA 1.33x mode, I_{OUT} = 120 mA 1.5x mode, I_{OUT} = 120 mA 2x mode, I_{OUT} = 120 mA		0.5 3.5 3.5 6		Ω
F_{OSC}	Charge Pump Frequency	1.33x and 2x mode 1.5x mode	0.6 0.8	0.8 1.1	1.1 1.4	MHz
I_{SC_MAX}	Output short circuit Current Limit	V_{OUT} < 0.5 V		80		mA
LED_{TH}	1x to 1.33x or 1.33x to 1.5x or 1.5x to 2x Transition Thresholds at any LEDx pin			150		mV
V_{HYS}	1.33x to 1x Transition Hysteresis	V_{IN} − Highest LED V_F		400		mV
T_{DF}	Mode Transition Filter Delay			120		μs
I_{IN_MAX}	Input Current Limit	V_{OUT} > 1 V		450		mA
	EN/DIM Pin					
$R_{EN/DIM}$	− Internal Pull−down Resistor			100		kΩ
V_{HI}	− Logic High Level		1.3			V
V_{LO}	− Logic Low Level				0.4	V
T_{SD}	Thermal Shutdown			150		°C
T_{HYS}	Thermal Hysteresis			20		°C
V_{UVLO}	Undervoltage lockout (UVLO) threshold			2		V

Product parametric performance is indicated in the Electrical Characteristics for the listed test conditions, unless otherwise noted. Product performance may not be indicated by the Electrical Characteristics if operated under different conditions.

NOTE: Typical application circuit with external components is shown on page 2.

Table 4. RECOMMENDED EN/SET TIMING (For 2.5 ≤ V_{IN} ≤ 5.5 V, over full ambient temperature range −40° to +85°C.)

Symbol	Name	Conditions	Min	Typ	Max	Units
T_{LO}	EN/SET program low time		0.2		100	μs
T_{HI}	EN/SET program high time		0.2			μs
T_{OFF}	EN/SET low time to shutdown		1.5			ms
T_D	LED current settling time			10		μs

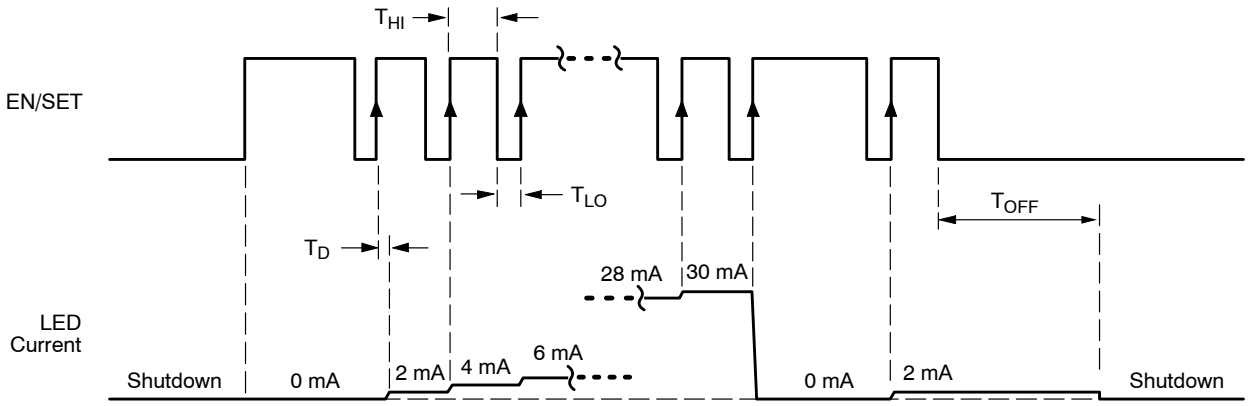

Figure 2. EN/SET One Wire Addressable Timing Diagram

TYPICAL PERFORMANCE CHARACTERISTICS

(V_{IN} = 3.6 V, I_{OUT} = 120 mA (6 LEDs at 20 mA), C_{IN} = C_{OUT} = C_1 = C_2 = 1 μF, T_{AMB} = 25°C unless otherwise specified.)

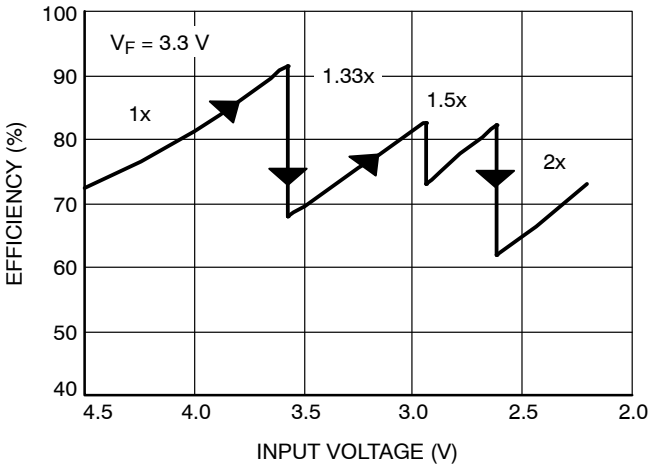

Figure 3. Efficiency vs. Input Voltage

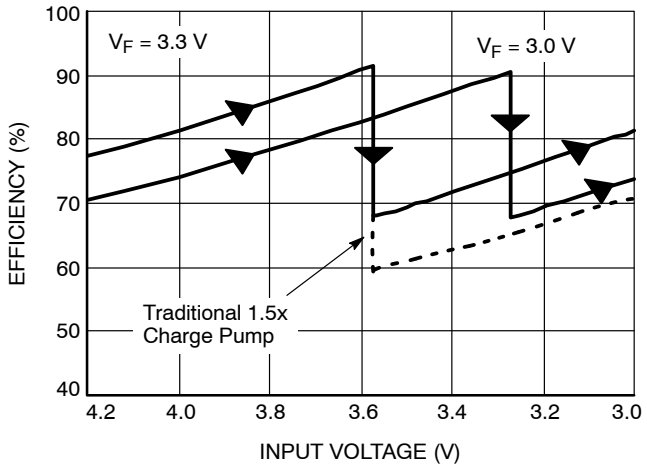

Figure 4. Efficiency vs. Li−Ion Voltage

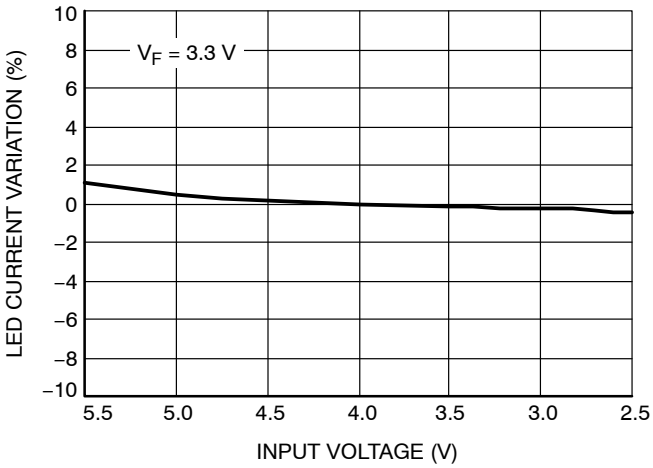

Figure 5. LED Current Change vs. Input Voltage

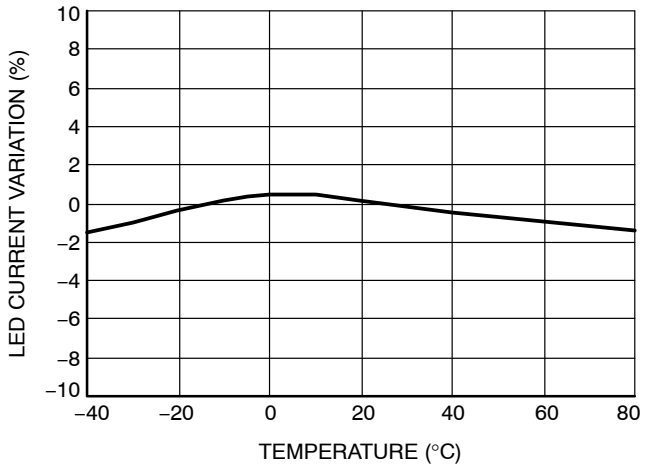

Figure 6. LED Current Change vs. Temperature

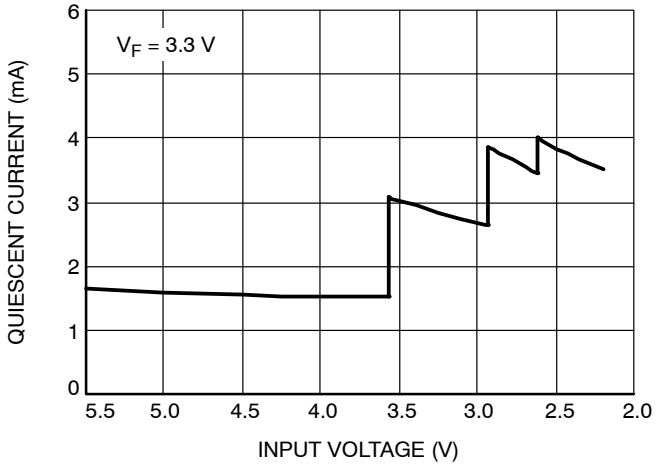

Figure 7. Quiescent Current vs. Input Voltage

TYPICAL PERFORMANCE CHARACTERISTICS

(V_{IN} = 3.6 V, I_{OUT} = 120 mA (6 LEDs at 20 mA), C_{IN} = C_{OUT} = C_1 = C_2 = 1 μF, T_{AMB} = 25°C unless otherwise specified.)

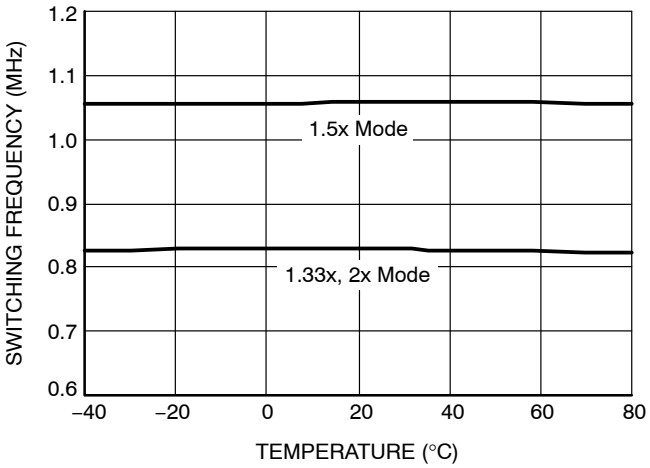

Figure 8. Switching Frequency vs. Temperature

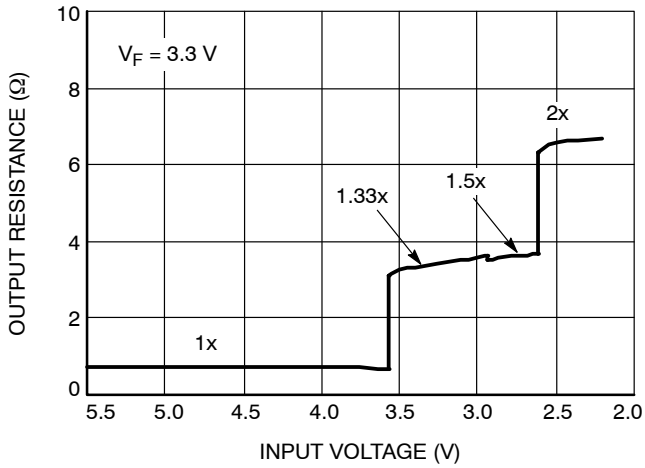

Figure 9. Output Resistance vs. Input Voltage

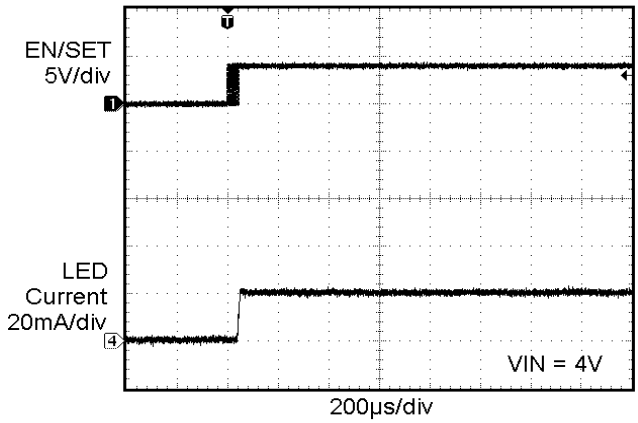

Figure 10. Power Up in 1x Mode

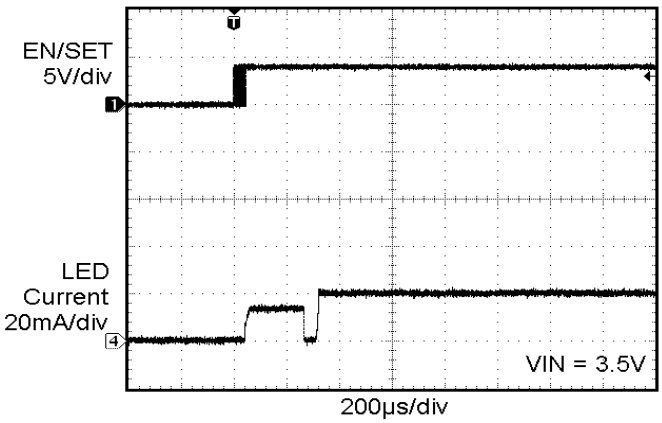

Figure 11. Power Up in 1.33x Mode

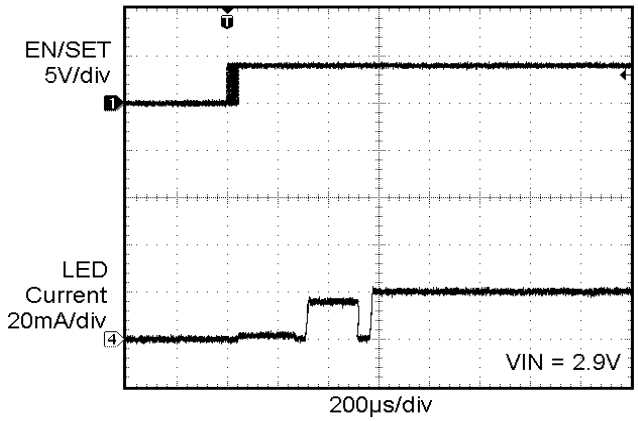

Figure 12. Power Up in 1.5x Mode

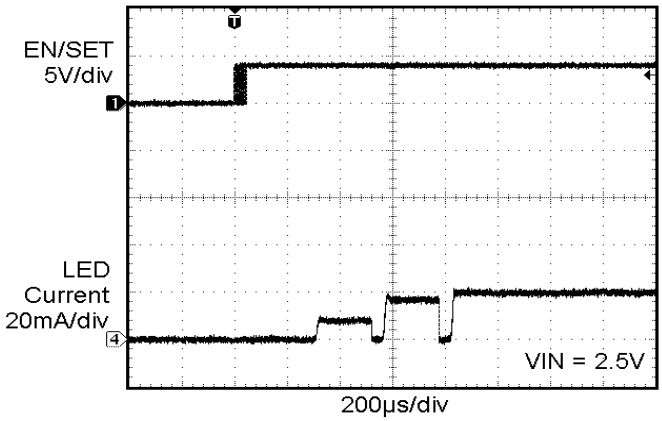

Figure 13. Power Up in 2x Mode

TYPICAL PERFORMANCE CHARACTERISTICS

(V_{IN} = 3.6 V, I_{OUT} = 120 mA (6 LEDs at 20 mA), C_{IN} = C_{OUT} = C_1 = C_2 = 1 μF, T_{AMB} = 25°C unless otherwise specified.)

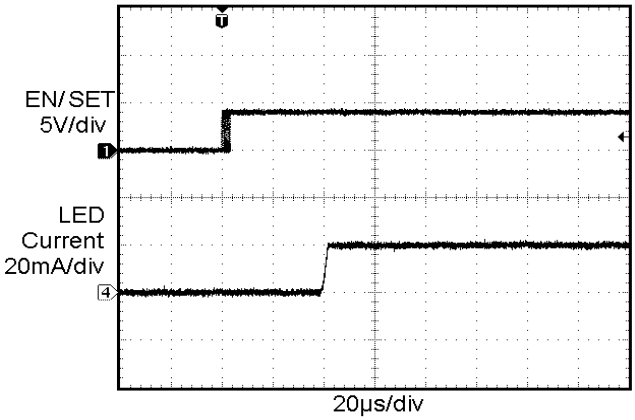

Figure 14. Power Up Delay (1x Mode)

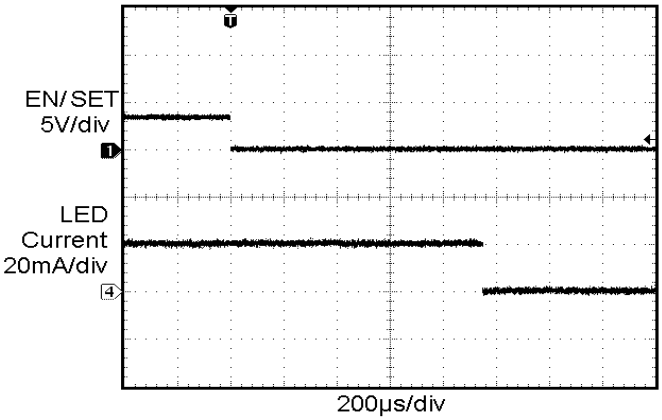

Figure 15. Power Down Delay (1x Mode)

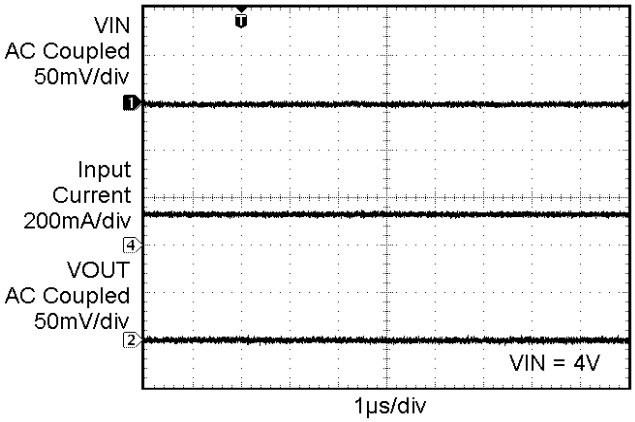

Figure 16. Operating Waveforms in 1x Mode

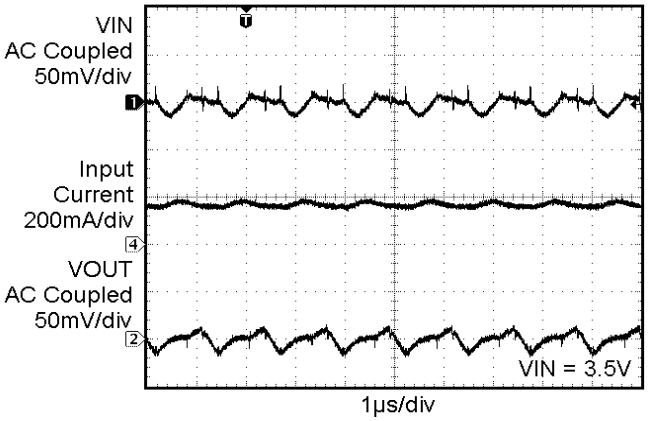

Figure 17. Switching Waveforms in 1.33x Mode

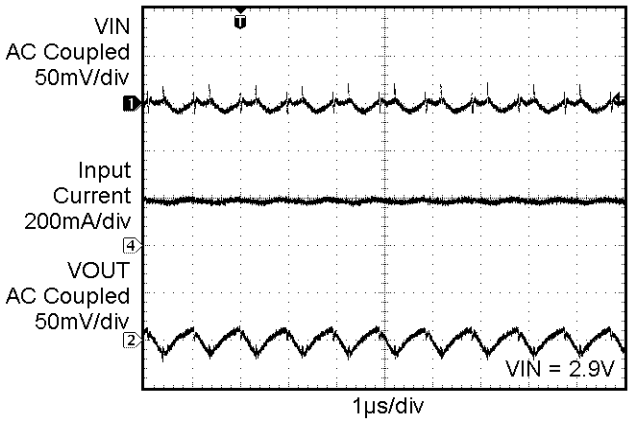

Figure 18. Switching Waveforms in 1.5x Mode

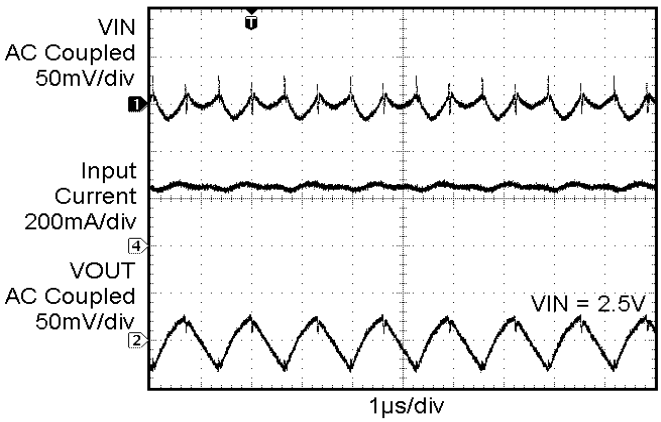

Figure 19. Switching Waveforms in 2x Mode

TYPICAL PERFORMANCE CHARACTERISTICS

(V_{IN} = 3.6 V, I_{OUT} = 120 mA (6 LEDs at 20 mA), C_{IN} = C_{OUT} = C_1 = C_2 = 1 μF, T_{AMB} = 25°C unless otherwise specified.)

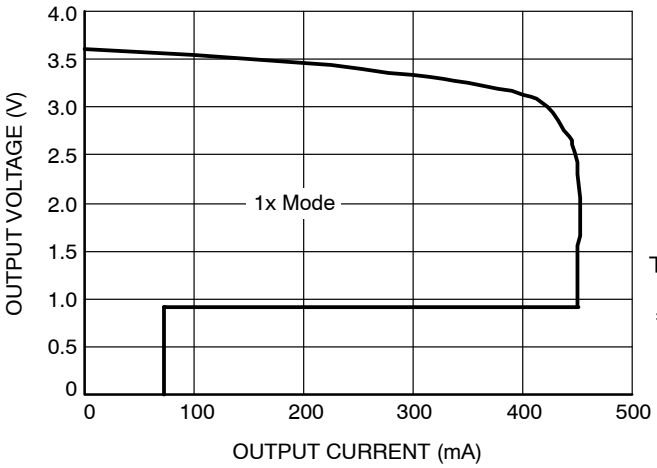

Figure 20. Foldback Current Limit

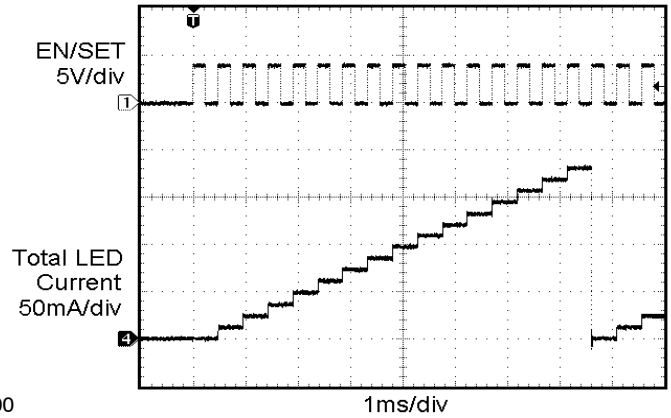

Figure 21. LED Brightness Levels

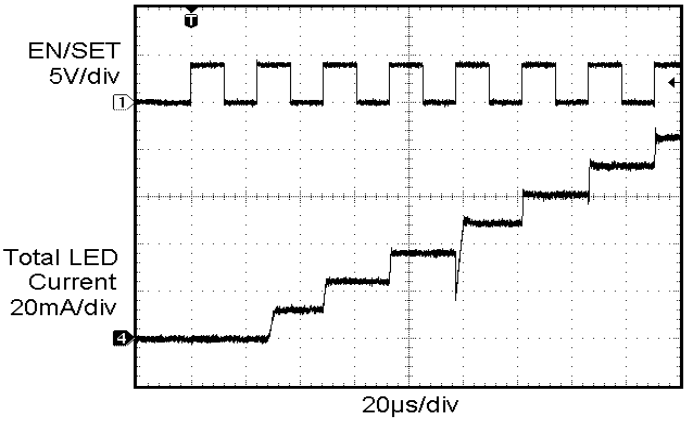

Figure 22. LED Settling Time

Table 5. PIN DESCRIPTION

Pin #	Name	Function
1	LED6	LED6 cathode terminal
2	LED5	LED5 cathode terminal
3	LED4	LED4 cathode terminal
4	LED3	LED3 cathode terminal
5	LED2	LED2 cathode terminal
6	LED1	LED1 cathode terminal
7	VOUT	Charge pump output, connect to LED anodes
8	VIN	Charge pump input, connect to battery or supply
9	C1+	Bucket capacitor 1, positive terminal
10	C1−	Bucket capacitor 1, negative terminal
11	C2+	Bucket capacitor 2, positive terminal
12	C2−	Bucket capacitor 2, negative terminal
13/14	NC	No connect
15	GND	Ground reference
16	EN/SET	Device enable (active high) and 1 wire control input
TAB	TAB	Connect to GND on the PCB

Pin Function

VIN is the supply pin for the charge pump. A small 1 μF ceramic bypass capacitor is required between the VIN pin and ground near the device. The operating input voltage range is from 2.5 V to 5.5 V. Whenever the input supply falls below the under−voltage threshold (2 V) all the LED channels will be automatically disabled and the device register are reset to default values.

EN/SET is the enable and one wire addressable control logic input for all LED channels. Guaranteed levels of logic high and logic low are set at 1.3 V and 0.4 V respectively. When EN/SET is initially taken high, the device becomes enabled and all LED currents remain at 0 mA. To place the device into zero current mode, the EN/SET pin must be held low for more than 1.5 ms.

VOUT is the charge pump output that is connected to the LED anodes. A small 1 μF ceramic bypass capacitor is required between the VOUT pin and ground near the device.

GND is the ground reference for the charge pump. The pin must be connected to the ground plane on the PCB.

C1+, C1− are connected to each side of the ceramic bucket capacitor C1.

C2+, C2− are connected to each side of the ceramic bucket capacitor C2.

LED1 to LED6 provide the internal regulated current for each of the LED cathodes. These pins enter high−impedance zero current state whenever the device is placed in shutdown mode.

TAB is the exposed pad underneath the package. For best thermal performance, the tab should be soldered to the PCB and connected to the ground plane.

Simplified Block Diagram

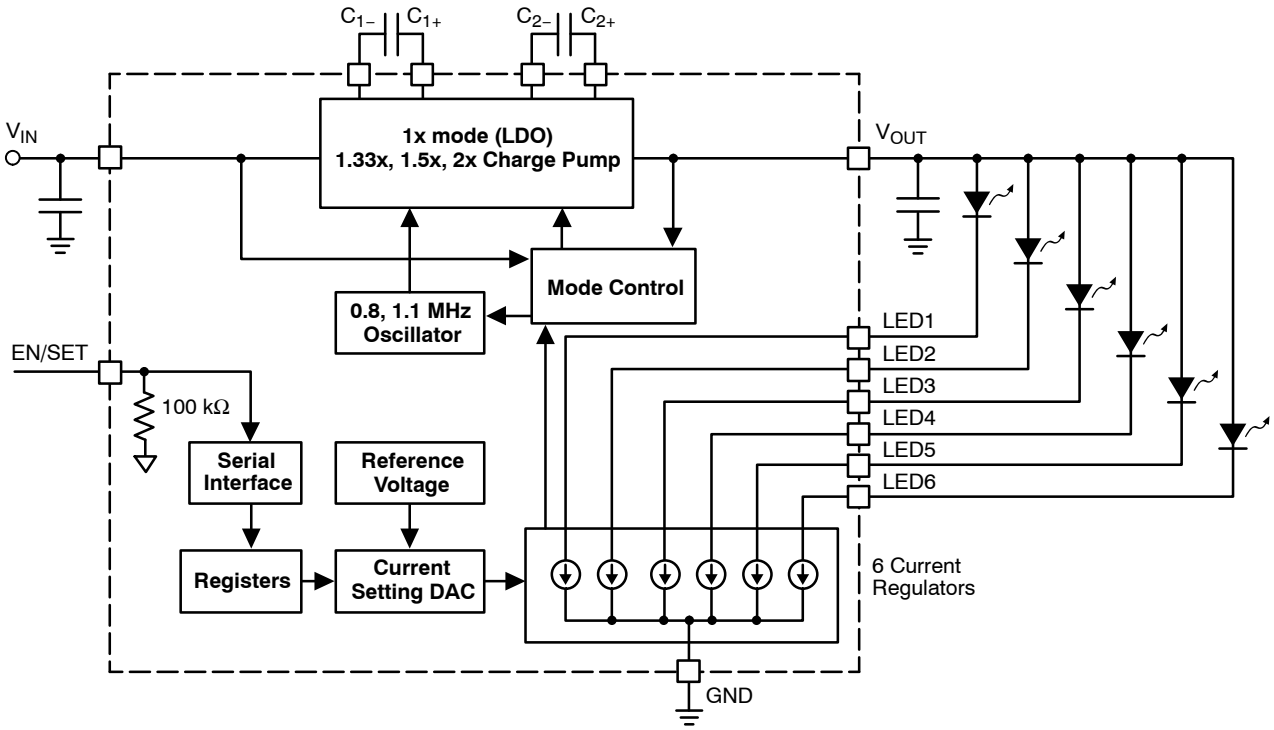

Figure 23. CAT3637 Functional Block Diagram

Basic Operation

At power−up, the CAT3637 starts operating in 1x mode where the output will be approximately equal to the input supply voltage (less any internal voltage losses). If the output voltage is sufficient to regulate all LED currents, the device remains in 1x operating mode.

If the output voltage is insufficient or falls to a level where the regulated current cannot be maintained, the device automatically switches into 1.33x mode (after a fixed delay time of about 120 μs). In 1.33x mode, the output voltage is approximately equal to 1.33 times the input supply voltage (less any internal voltage losses).

If the output voltage is still insufficient or falls to a level where the regulated currents cannot be maintained, the device will automatically switch to the 1.5x mode (after a fixed delay time of about 400 μs). In 1.5x mode, the output is approximately equal to 1.5 times the input supply voltage (less any internal voltage losses).

If the output voltage is still insufficient to drive the LEDs, it will automatically switch into 2x mode where the output is approximately equal to 2 times the input supply voltage (less any internal voltage losses).

If the device detects a sufficient output voltage to drive all LED currents in 1x mode, it will revert back to 1x mode. This only applies for changing back to the 1x mode.

LED Current Setting

The current in each of the six LED channels is programmed through the 1−wire EN/SET digital control input. At the initial power−up and once the EN/SET is set high, the LED current remains at zero in all channels. On the first EN/SET pulse (positive edge), the current is set to 2 mA in all channels. On each consecutive pulse, the current is incremented by 2 mA. On the 15th pulse, the current is equal to the full scale of 30 mA. On the following pulse (16th pulse), the current goes back to zero and the previous sequence can be repeated. The EN/SET pin can be pulsed at high frequency 15 times to decrement the current by 2 mA or to program the current from 0 mA to 30 mA. The maximum EN/SET signal frequency for programming the LED current is 2.5 MHz.

To power−down the device and turn−off all current sources, the EN/SET input should be kept low for a duration T_{OFF} of 1.5 ms or more. The driver typically powers−down with a delay of about 1 ms.

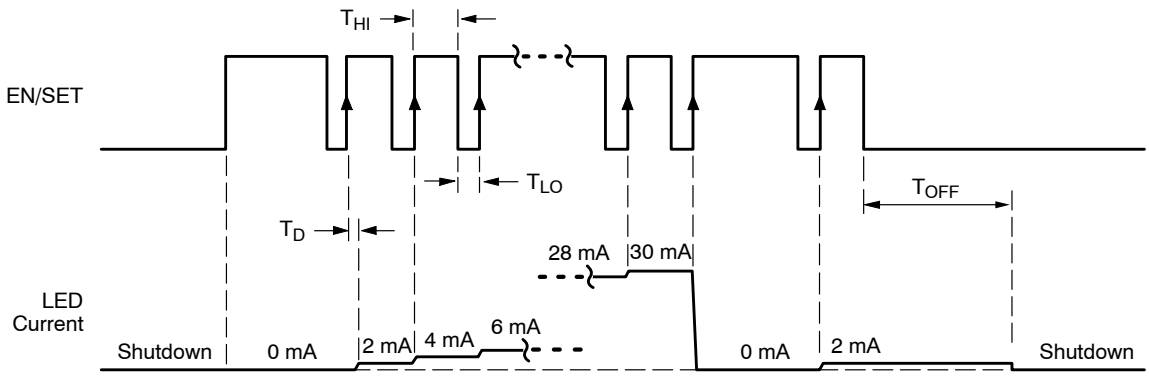

Figure 24. EN/SET One Wire Addressable Timing Diagram

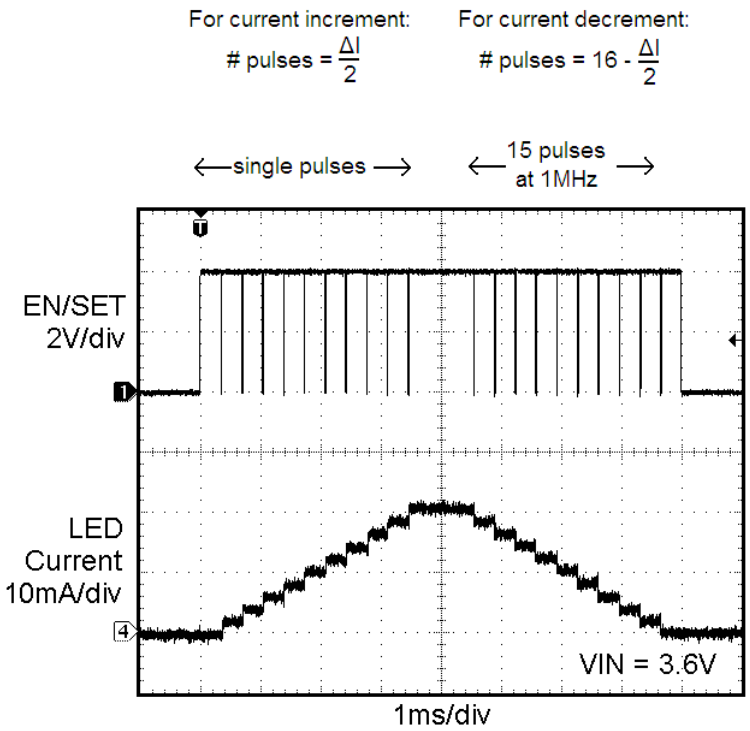

Figure 25. EN/SET Program Increasing / Decreasing LED Current by 2 mA

Unused LED Channels

For applications with 5 LEDs or less, unused LEDs can be disabled by connecting the LED pin directly to VOUT, as shown on Figure 26. If LED pin voltage is within 1 V of VOUT, then the channel is switched off and a 200 μA test current is placed in the channel to sense when the channel moves below VOUT – 1 V.

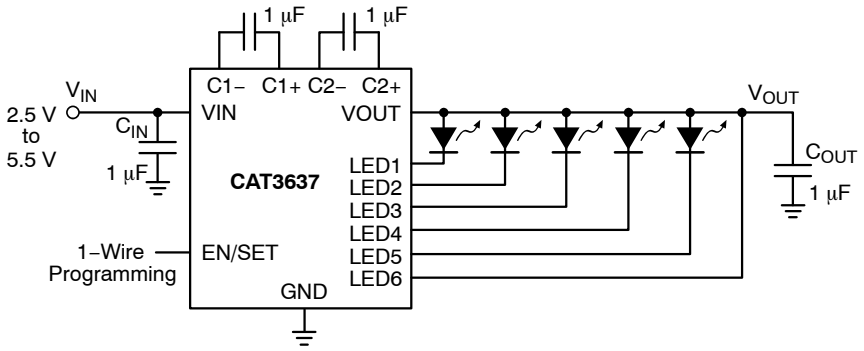

Figure 26. Five LED Application

Protection Mode

If an LED is disconnected, the output voltage VOUT automatically limits at about 5.5 V. This is to prevent the output pin from exceeding its absolute maximum rating.

If the die temperature exceeds +150°C the driver will enter a thermal protection shutdown mode. When the device temperature drops by about 20°C the device will resume normal operation.

LED Selection

LEDs with forward voltages (V_F) ranging from 1.3 V to 5.0 V may be used with the CAT3637. Selecting LEDs with lower V_F is recommended in order to improve the efficiency by keeping the driver in 1x mode longer as the battery voltage decreases.

For example, if a white LED with a V_F of 3.3 V is selected over one with V_F of 3.5 V, the CAT3637 will stay in 1x mode for lower supply voltage of 0.2 V. This helps improve the efficiency and extends battery life.

External Components

The driver requires two external 1 μF ceramic capacitors for decoupling input, output, and for the charge pump. Both capacitors type X5R and X7R are recommended for the LED driver application. In all charge pump modes, the input current ripple is kept very low by design and an input bypass capacitor of 1 μF is sufficient.

In 1x mode, the device operates in linear mode and does not introduce switching noise back onto the supply.

Recommended Layout

In charge pump mode, the driver switches internally at a high frequency. It is recommended to minimize trace length to all four capacitors. A ground plane should cover the area under the driver IC as well as the bypass capacitors. Short connection to ground on capacitors C_{IN} and C_{OUT} can be implemented with the use of multiple via. A copper area matching the TQFN exposed pad (TAB) must be connected to the ground plane underneath. The use of multiple via improves the package heat dissipation.

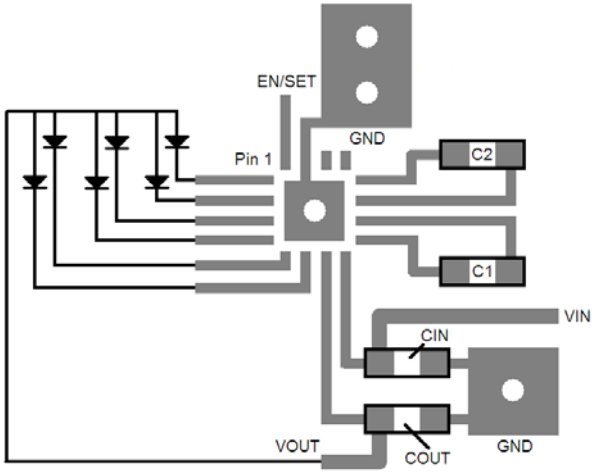

Figure 27. Recommended Layout

TQFN16, 3x3
CASE 510AD−01
ISSUE A

DATE 19 MAR 2008

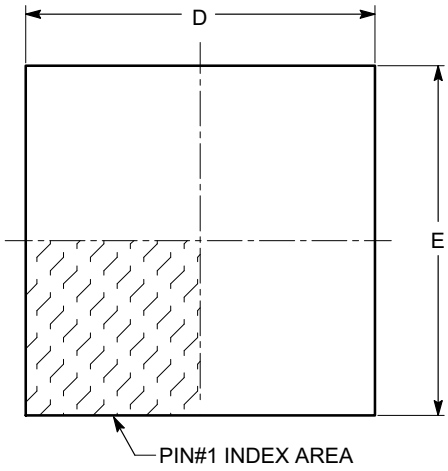

TOP VIEW

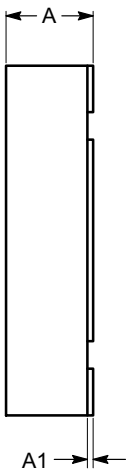

SIDE VIEW

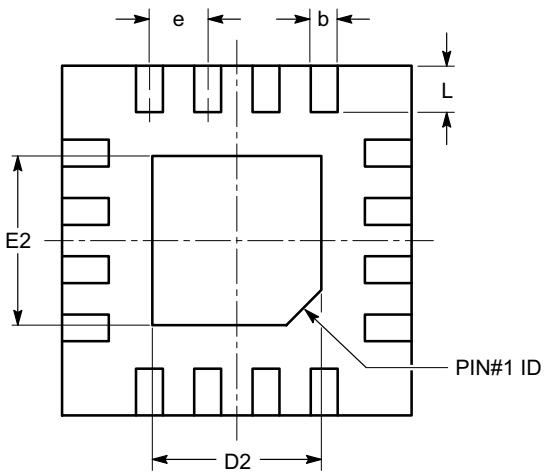

BOTTOM VIEW

SYMBOL	MIN	NOM	MAX
A	0.70	0.75	0.80
A1	0.00	0.02	0.05
A3		0.20 REF	
b	0.18	0.25	0.30
D	2.90	3.00	3.10
D2	1.40	–––	1.80
E	2.90	3.00	3.10
E2	1.40	–––	1.80
e		0.50 BSC	
L	0.30	0.40	0.50

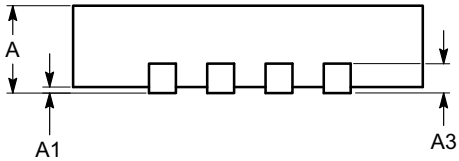

FRONT VIEW

Notes:
(1) All dimensions are in millimeters.
(2) Complies with JEDEC MO-220.

DOCUMENT NUMBER:	**98AON34373E**	Electronic versions are uncontrolled except when accessed directly from the Document Repository. Printed versions are uncontrolled except when stamped "CONTROLLED COPY" in red.
DESCRIPTION:	**TQFN16, 3X3**	**PAGE 1 OF 1**

ON Semiconductor and ON are trademarks of Semiconductor Components Industries, LLC dba ON Semiconductor or its subsidiaries in the United States and/or other countries. ON Semiconductor reserves the right to make changes without further notice to any products herein. ON Semiconductor makes no warranty, representation or guarantee regarding the suitability of its products for any particular purpose, nor does ON Semiconductor assume any liability arising out of the application or use of any product or circuit, and specifically disclaims any and all liability, including without limitation special, consequential or incidental damages. ON Semiconductor does not convey any license under its patent rights nor the rights of others.

© Semiconductor Components Industries, LLC, 2019

onsemi, onsemi, and other names, marks, and brands are registered and/or common law trademarks of Semiconductor Components Industries, LLC dba "**onsemi**" or its affiliates and/or subsidiaries in the United States and/or other countries. **onsemi** owns the rights to a number of patents, trademarks, copyrights, trade secrets, and other intellectual property. A listing of **onsemi**'s product/patent coverage may be accessed at www.onsemi.com/site/pdf/Patent−Marking.pdf. **onsemi** reserves the right to make changes at any time to any products or information herein, without notice. The information herein is provided "as−is" and **onsemi** makes no warranty, representation or guarantee regarding the accuracy of the information, product features, availability, functionality, or suitability of its products for any particular purpose, nor does **onsemi** assume any liability arising out of the application or use of any product or circuit, and specifically disclaims any and all liability, including without limitation special, consequential or incidental damages. Buyer is responsible for its products and applications using **onsemi** products, including compliance with all laws, regulations and safety requirements or standards, regardless of any support or applications information provided by **onsemi**. "Typical" parameters which may be provided in **onsemi** data sheets and/or specifications can and do vary in different applications and actual performance may vary over time. All operating parameters, including "Typicals" must be validated for each customer application by customer's technical experts. **onsemi** does not convey any license under any of its intellectual property rights nor the rights of others. **onsemi** products are not designed, intended, or authorized for use as a critical component in life support systems or any FDA Class 3 medical devices or medical devices with a same or similar classification in a foreign jurisdiction or any devices intended for implantation in the human body. Should Buyer purchase or use **onsemi** products for any such unintended or unauthorized application, Buyer shall indemnify and hold **onsemi** and its officers, employees, subsidiaries, affiliates, and distributors harmless against all claims, costs, damages, and expenses, and reasonable attorney fees arising out of, directly or indirectly, any claim of personal injury or death associated with such unintended or unauthorized use, even if such claim alleges that **onsemi** was negligent regarding the design or manufacture of the part. **onsemi** is an Equal Opportunity/Affirmative Action Employer. This literature is subject to all applicable copyright laws and is not for resale in any manner.

ADDITIONAL INFORMATION

TECHNICAL PUBLICATIONS:
Technical Library: www.onsemi.com/design/resources/technical−documentation
onsemi Website: www.onsemi.com

ONLINE SUPPORT: www.onsemi.com/support
For additional information, please contact your local Sales Representative at
www.onsemi.com/support/sales