High-Current, High & Low-Side, Gate-Drive IC

FAN7390

ON Semiconductor®

www.onsemi.com

SOIC8
8−SOP
CASE 751EG

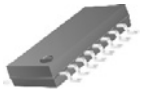

SOIC14
14−SOP
CASE 751ER

Description

The FAN7390 is a monolithic high− and low−side gate−drive IC, which can drive high speed MOSFETs and IGBTs that operate up to +600 V. It has a buffered output stage with all NMOS transistors designed for high pulse current driving capability and minimum cross−conduction.

ON Semiconductor's high−voltage process and common−mode noise canceling techniques provide stable operation of the high−side driver under high dv/dt noise circumstances. An advanced level shift circuit offers high−side gate driver operation up to V_S = −9.8 V (typical) for V_{BS} = 15 V.

The UVLO circuit prevents malfunction when V_{DD} and V_{BS} are lower than the specified threshold voltage.

The high current and low output voltage drop feature make this device suitable for the PDP sustain pulse driver, motor driver, switching power supply, and high− power DC−DC converter applications.

Features

- Floating Channels for Bootstrap Operation to +600 V
- Typically 4.5 A / 4.5 A Sourcing / Sinking Current Driving Capability
- Common−Mode dv/dt Noise−Canceling Circuit
- Built−in Under−Voltage Lockout for Both Channels
- Matched Propagation Delay for Both Channels
- Logic (V_{SS}) and Power (COM) Ground ±7 V Offset
- 3.3 V and 5 V Input Logic Compatible
- Output In−Phase with Input
- This is a Pb−Free Device

Applications

- PDP Sustain Driver
- HID Lamp Ballast
- SMPS
- Motor Driver

MARKING DIAGRAM

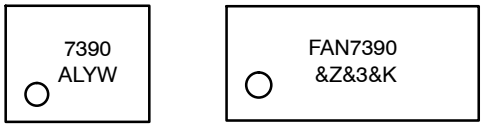

FAN7390MX FAN7390M1X

7390, FAN7390	= Device Code
A	= Assembly Site
L	= Wafer Lot Number
YW	= Assembly Start Week
&Z	= Assembly Plant Code
&3	= 3−Digit Date Code
&K	= 2−Digits Lot Run Traceability Code

ORDERING INFORMATION

See detailed ordering and shipping information on page 12 of this data sheet.

© Semiconductor Components Industries, LLC, 2008

TYPICAL APPLICATION CIRCUIT

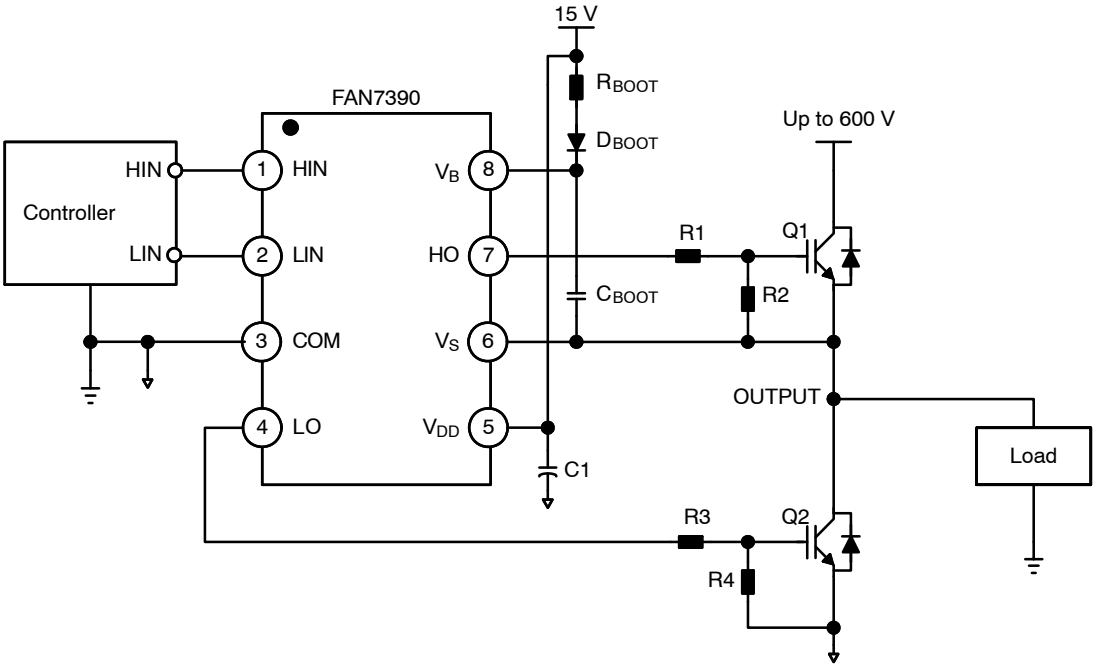

Figure 1. Application Circuit for Half−Bridge (Referenced 8−SOP)

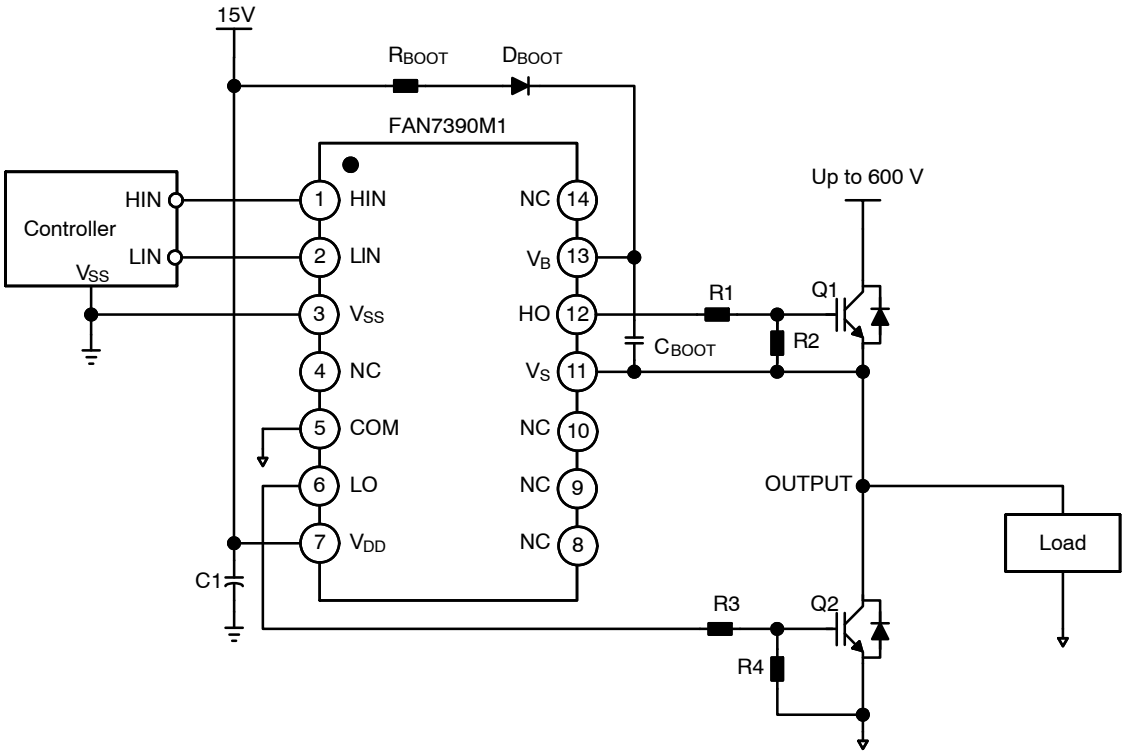

Figure 2. Application Circuit for Half−Bridge (Referenced 14−SOP)

INTERNAL BLOCK DIAGRAM

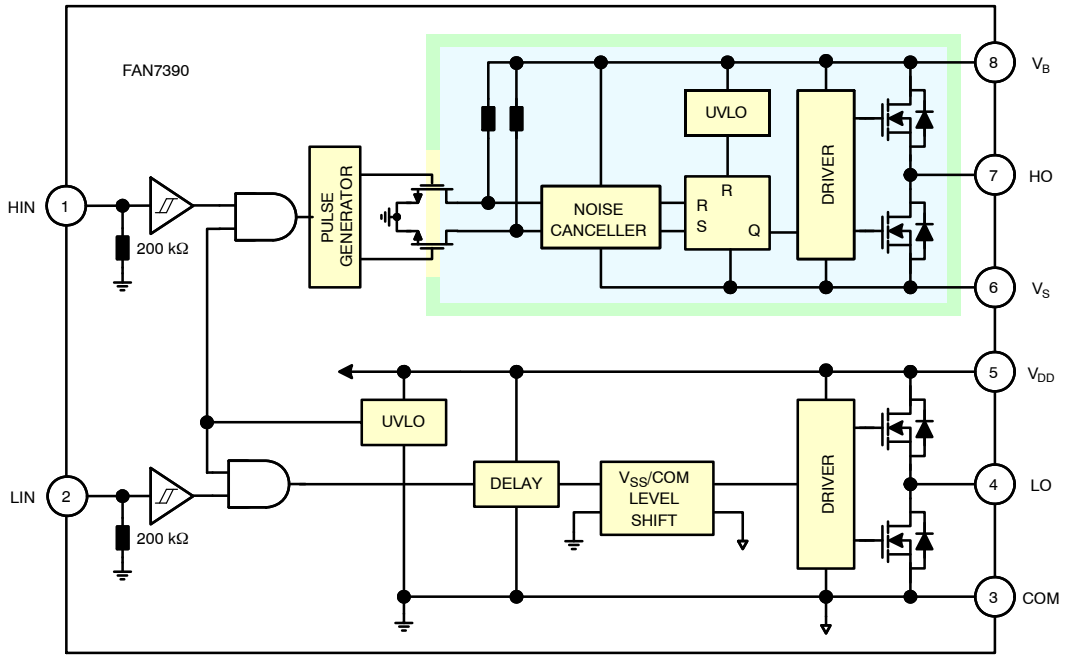

Figure 3. Functional Block Diagram (Referenced 8−SOP)

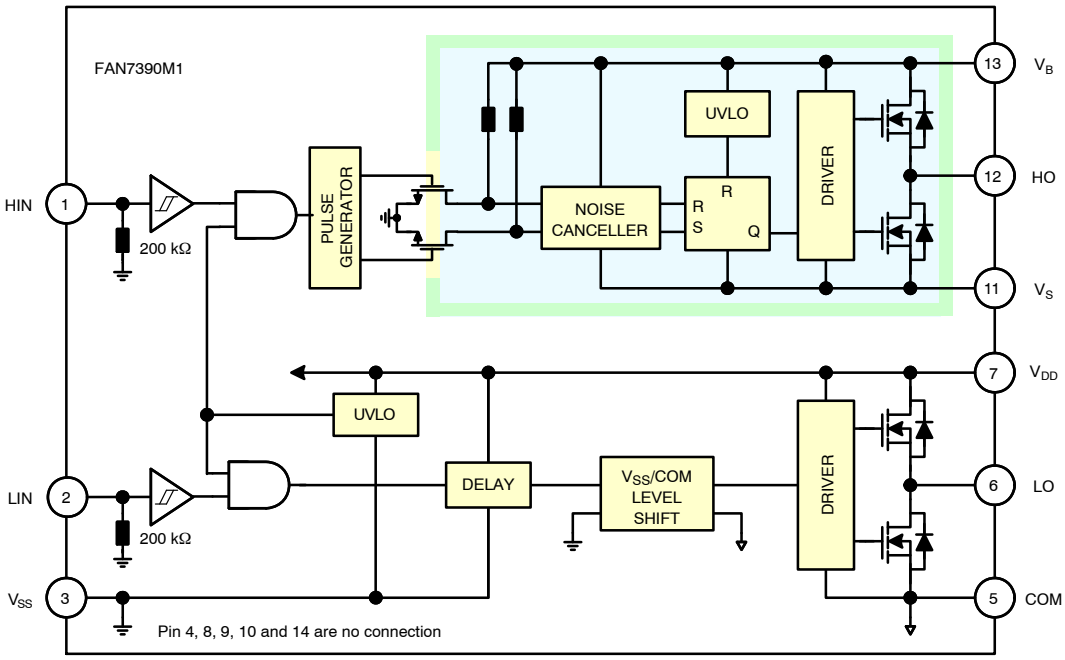

Figure 4. Functional Block Diagram (Referenced 14−SOP)

PIN CONFIGURATION

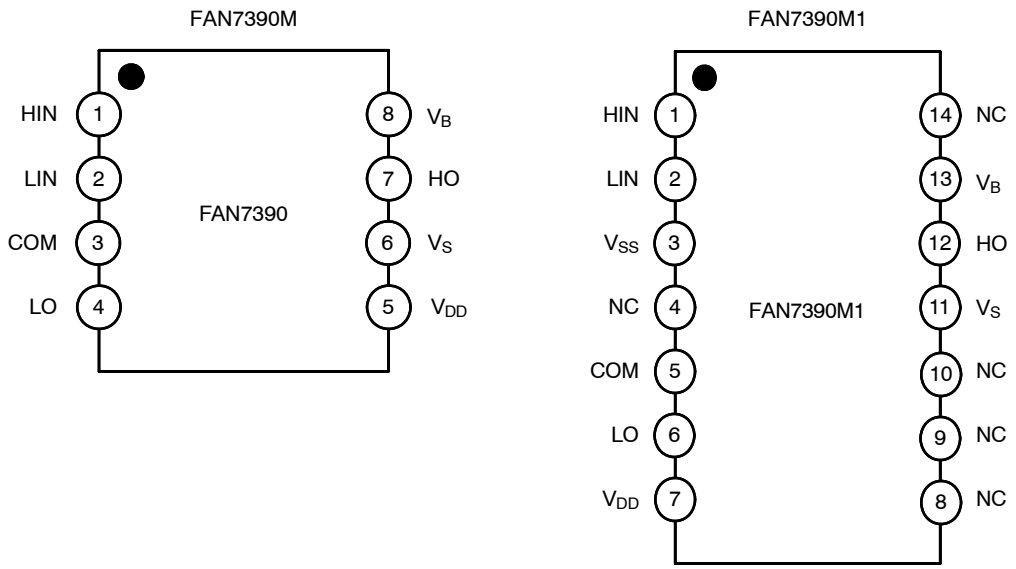

Figure 5. Pin Assignments (Top View)

PIN DEFINITIONS

8−Pin	14−Pin	Name	Description
1	1	HIN	Logic Input for High−Side Gate Driver Output
2	2	LIN	Logic Input for Low−Side Gate Driver Output
	3	V_{SS}	Logic Ground (FAN7390M1 only)
3	5	COM	Low−Side Driver Return
4	6	LO	Low−Side Driver Output
5	7	V_{DD}	Low−Side and Logic Part Supply Voltage
6	11	V_S	High−Voltage Floating Supply Return
7	12	HO	High−Side Driver Output
8	13	V_B	High−Side Floating Supply
	4, 8, 9, 10, 14	NC	No Connect

ABSOLUTE MAXIMUM RATINGS (T_A = 25°C, unless otherwise noted)

Symbol	Characteristics	Min	Max	Unit
V_S	High−Side Floating Supply Offset Voltage	V_B − 25	V_B + 0.3	V
V_B	High−Side Floating Supply Voltage	−0.3	625.0	V
V_{HO}	High−Side Floating Output Voltage HO	V_S − 0.3	V_B + 0.3	V
V_{DD}	Low−Side and Logic Fixed Supply Voltage	−0.3	25.0	V
V_{LO}	Low−Side Output Voltage LO	−0.3	V_{DD} + 0.3	V
V_{IN}	Logic Input Voltage (HIN and LIN)	V_{SS} − 0.3	V_{DD} + 0.3	V
V_{SS}	Logic Ground (FAN7390M1 only)	V_{DD} − 25	V_{DD} + 0.3	V
dV_S/dt	Allowable Offset Voltage Slew Rate	−	50	V/ns
P_D (Note 1, 2, 3)	Power Dissipation	8−SOP	0.625	W
		14−SOP	1.000	
θ_{JA}	Thermal Resistance, Junction−to−Ambient	8−SOP	200	°C/W
		14−SOP	110	
T_J	Junction Temperature	−	+150	°C
T_{STG}	Storage Temperature	−	+150	°C

Stresses exceeding those listed in the Maximum Ratings table may damage the device. If any of these limits are exceeded, device functionality should not be assumed, damage may occur and reliability may be affected.

1. Mounted on 76.2 x 114.3 x 1.6 mm PCB (FR−4 glass epoxy material).
2. Refer to the following standards:
   JESD51−2: Integral circuits thermal test method environmental conditions − natural convection
   JESD51−3: Low effective thermal conductivity test board for leaded surface mount packages.
3. Do not exceed P_D under any circumstances.

RECOMMENDED OPERATING CONDITIONS

Symbol	Parameter	Min	Max	Unit
V_B	High−Side Floating Supply Voltage	V_S + 10	V_S + 22	V
V_S	High−Side Floating Supply Offset Voltage	6 − V_{DD}	600	V
V_{HO}	High−Side Output Voltage	V_S	V_B	V
V_{DD}	Low−Side and Logic Supply Voltage	10	22	V
V_{LO}	Low−Side Output Voltage	COM	V_{DD}	V
V_{IN}	Logic Input Voltage (HIN and LIN)	V_{SS}	V_{DD}	V
T_A	Operating Ambient Temperature	−40	+125	°C

Functional operation above the stresses listed in the Recommended Operating Ranges is not implied. Extended exposure to stresses beyond the Recommended Operating Ranges limits may affect device reliability.

ELECTRICAL CHARACTERISTICS (V_{BIAS} (V_{DD}, V_{BS}) = 15.0 V, V_S = V_{SS} = COM, T_A = 25°C, unless otherwise specified. The V_{IL}, V_{IH}, and I_{IN} parameters are referenced to V_{SS}/COM and are applicable to the respective input signals HIN and LIN. The V_O and I_O parameters are referenced to COM and V_S is applicable to the respective output signals HO and LO.)

Symbol	Characteristics	Test Condition	Min	Typ	Max	Unit
POWER SUPPLY SECTION (V_{DD} AND V_{BS})						
V_{DDUV+} V_{BSUV+}	V_{DD} and V_{BS} Supply Under−Voltage Positive−going Threshold		8.0	8.8	9.8	V
V_{DDUV-} V_{BSUV-}	V_{DD} and V_{BS} Supply Under−Voltage Negative−going Threshold		7.4	8.3	9.0	
V_{DDUVH} V_{BSUVH}	V_{DD} and V_{BS} Supply Under−Voltage Lockout Hysteresis Voltage		–	0.5	–	
I_{LK}	Offset Supply Leakage Current	V_B = V_S = 600 V	–	–	50	μA
I_{QBS}	Quiescent V_{BS} Supply Current	V_{IN} = 0 V or 5 V	–	45	80	
I_{QDD}	Quiescent V_{DD} Supply Current	V_{IN} = 0 V or 5 V	–	75	110	
I_{PBS}	Operating V_{BS} Supply Current	f_{IN} = 20 kHz, rms value	–	530	640	μA
I_{PDD}	Operating V_{DD} Supply Current	f_{IN} = 20 kHz, rms value	–	530	640	
LOGIC INPUT SECTION (HIN, LIN)						
V_{IH}	Logic “1” Input Voltage		2.5	–	–	V
V_{IL}	Logic “0” Input Voltage		–	–	1.2	
I_{IN+}	Logic “1” Input Bias Current	V_{IN} = 5 V	–	25	50	μA
I_{IN-}	Logic “0” Input Bias Current	V_{IN} = 0 V	–	1.0	2.0	
R_{IN}	Input Pull−down Resistance		100	200	–	kΩ
GATE DRIVER OUTPUT SECTION (HO, LO)						
V_{OH}	High−level Output Voltage, V_{BIAS}−V_O	No Load	–	–	1.0	V
V_{OL}	Low−level Output Voltage, V_O	No Load	–	–	35	mV
I_{O+}	Output High, Short−circuit Pulsed Current (Note 4)	V_O = 0 V, V_{IN} = 5 V with PW < 1 0 μs	3.5	4.5		A
I_{O-}	Output Low, Short−circuit Pulsed Current (Note 4)	V_O = 15 V, V_{IN} = 0 V with PW < 10 μs	3.5	4.5	–	
V_S	Allowable Negative V_S Pin Voltage for HIN Signal Propagation to HO		–	−9.8	−7.0	V
V_{SS}−COM	V_{SS}−COM/COM−V_{SS} Voltage Endurability		−7.0	–	7.0	V

Product parametric performance is indicated in the Electrical Characteristics for the listed test conditions, unless otherwise noted. Product performance may not be indicated by the Electrical Characteristics if operated under different conditions.

4. This parameter guaranteed by design.

DYNAMIC ELECTRICAL CHARACTERISTICS (V_{BIAS} (V_{DD}, V_{BS}) = 15.0 V, V_S = V_{SS} = COM = 0 V, C_L = 1000 pF, and T_A = 25°C unless otherwise specified.)

Symbol	Characteristics	Test Condition	Min	Typ	Max	Unit
t_{on}	Turn−on Propagation Delay	V_S = 0 V	–	140	220	ns
t_{off}	Turn−off Propagation Delay	V_S = 0 V	–	140	220	
MT	Delay Matching, HS & LS Turn−on/off		–	0	50	
t_r	Turn−on Rise Time		–	25	50	
t_f	Turn−off Fall Time		–	20	45	

TYPICAL CHARACTERISTICS

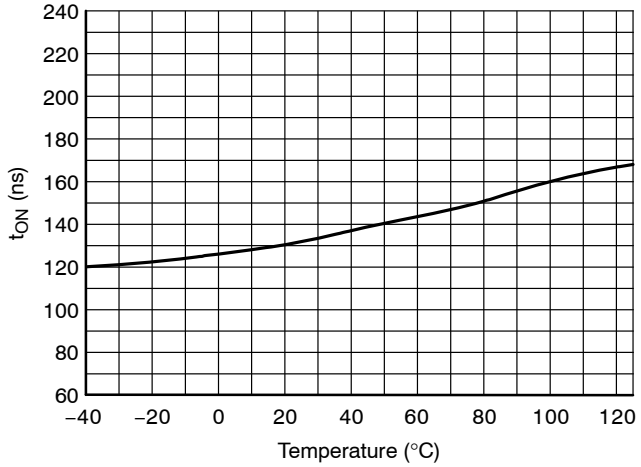

Figure 6. Turn−on Propagation Delay vs. Temperature

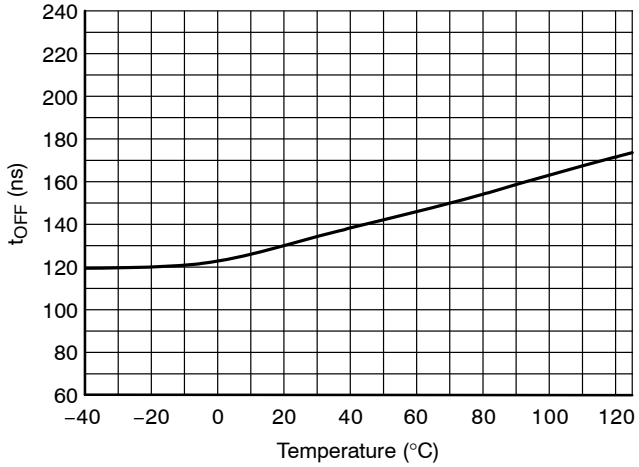

Figure 7. Turn−off Propagation Delay vs. Temperature

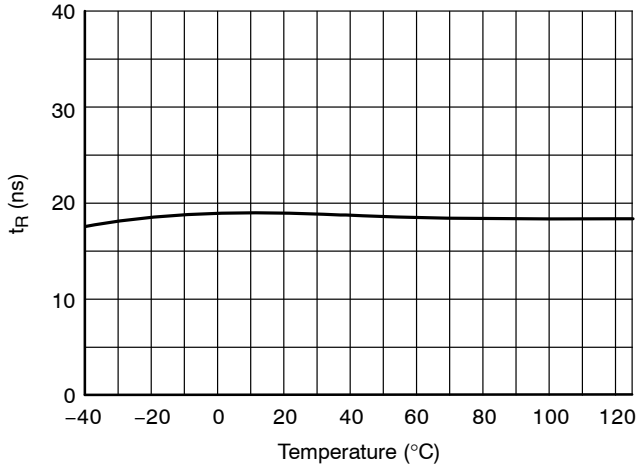

Figure 8. Turn−on Rise Time vs. Temperature

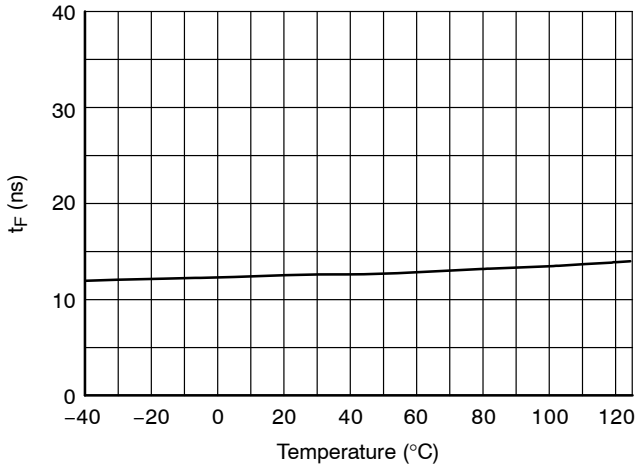

Figure 9. Turn−off Fall Time vs. Temperature

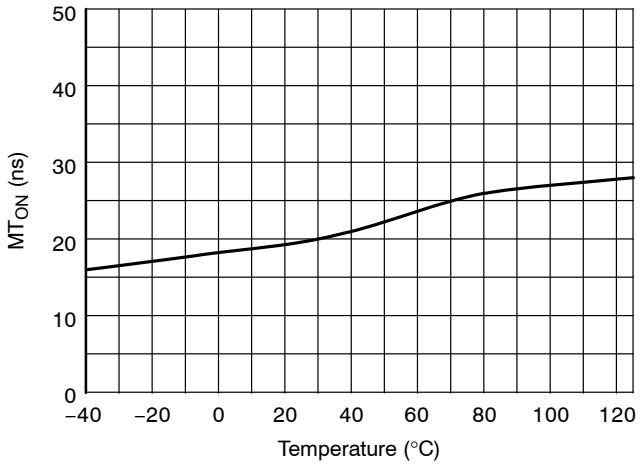

Figure 10. Turn−on Delay Matching vs. Temperature

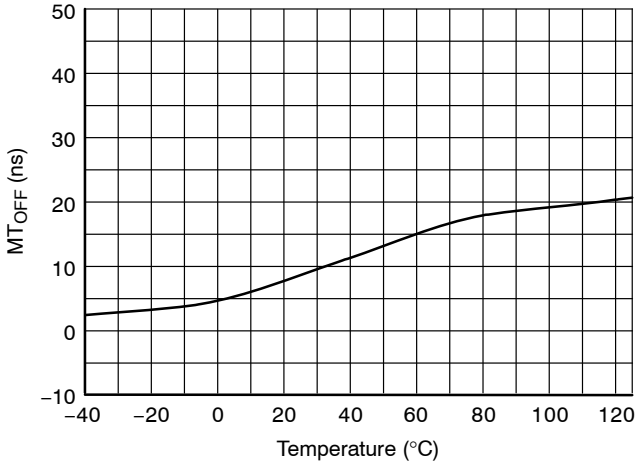

Figure 11. Turn−off Delay Matching vs. Temperature

TYPICAL CHARACTERISTICS (continued)

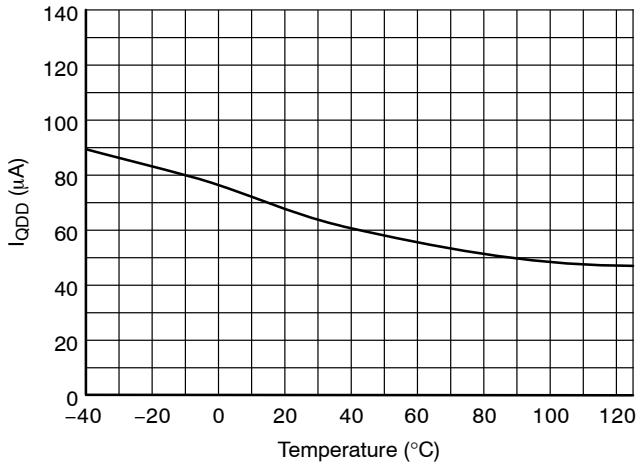

Figure 12. Quiescent V_{DD} Supply Current vs. Temperature

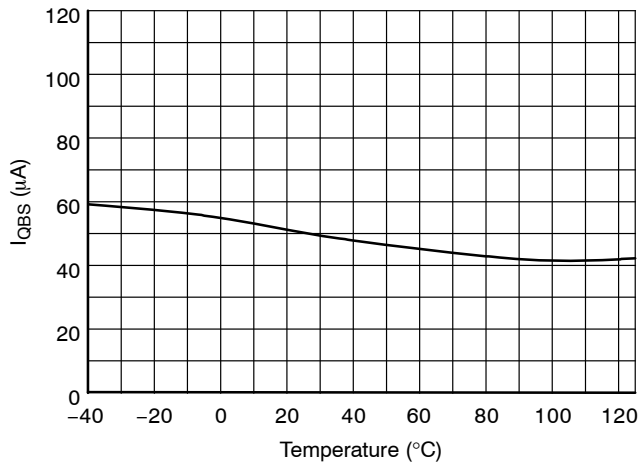

Figure 13. Quiescent V_{BS} Supply Current vs. Temperature

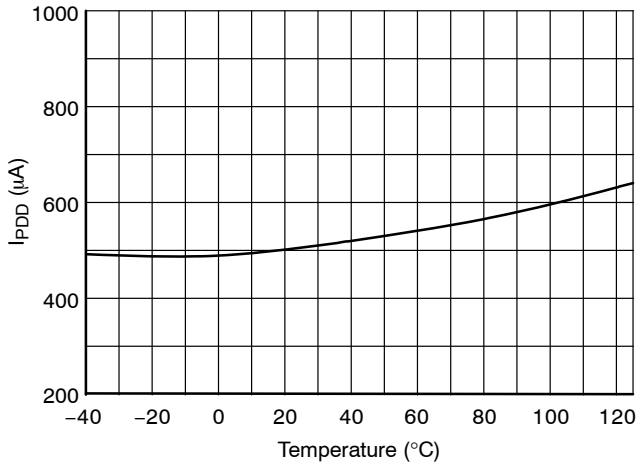

Figure 14. Operating V_{DD} Supply Current vs. Temperature

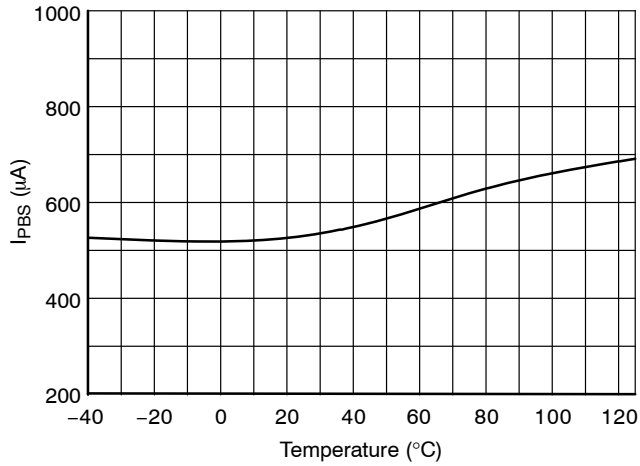

Figure 15. Operating V_{BS} Supply Current vs. Temperature

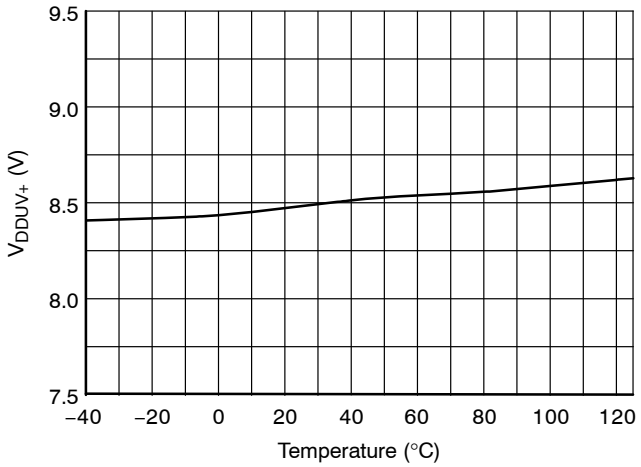

Figure 16. V_{DD} UVLO+ vs. Temperature

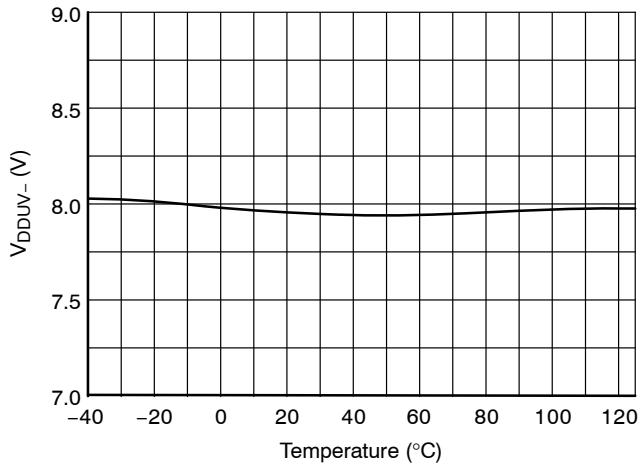

Figure 17. V_{DD} UVLO− vs. Temperature

TYPICAL CHARACTERISTICS (continued)

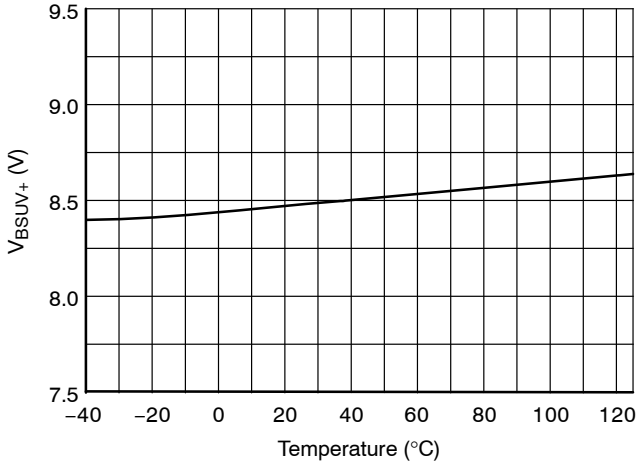

Figure 18. V_{BS} UVLO+ vs. Temperature

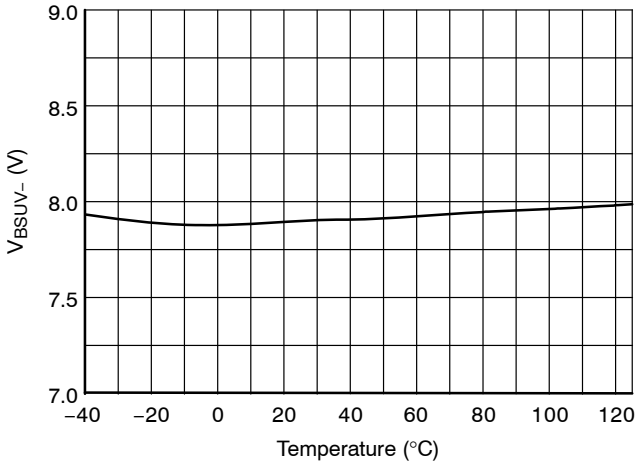

Figure 19. V_{BS} UVLO− vs. Temperature

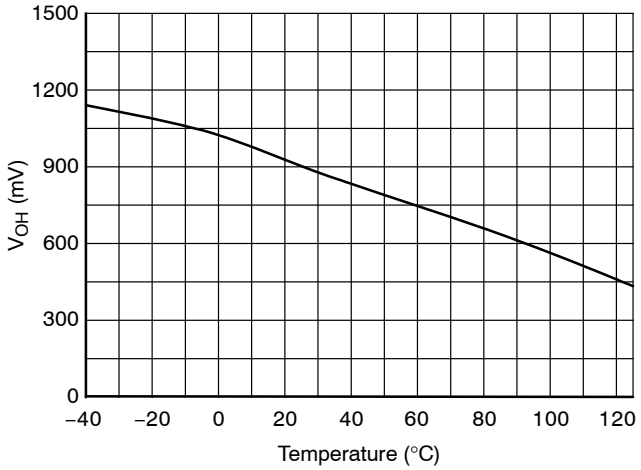

Figure 20. High−Level Output Voltage vs. Temperature

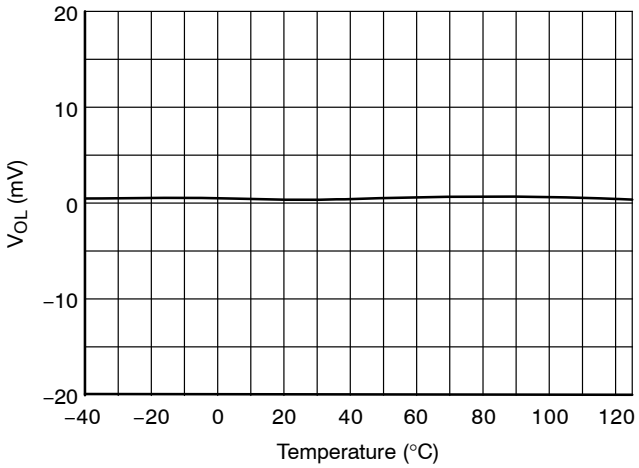

Figure 21. Low−Level Output Voltage vs. Temperature

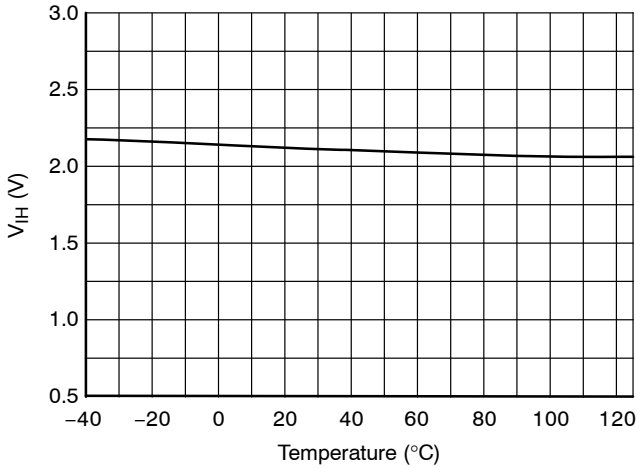

Figure 22. Logic High Input Voltage vs. Temperature

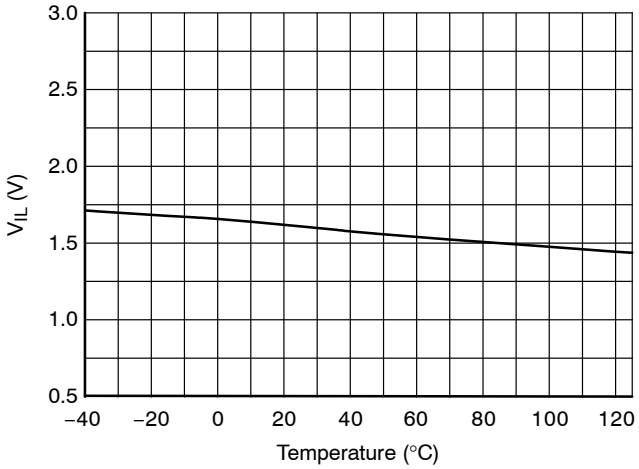

Figure 23. Low Input Voltage vs. Temperature

TYPICAL CHARACTERISTICS (continued)

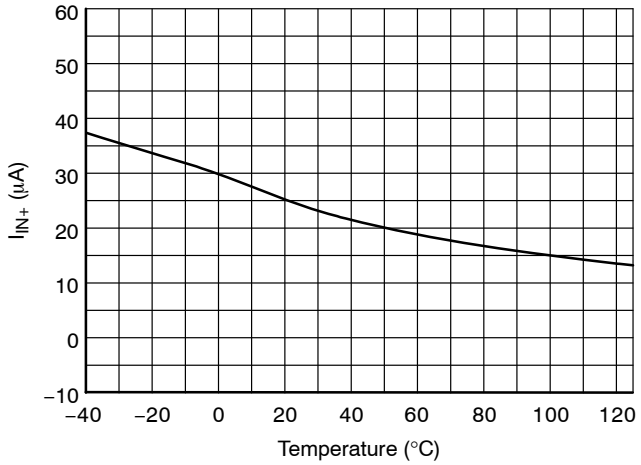

Figure 24. Logic Input High Bias Current vs. Temperature

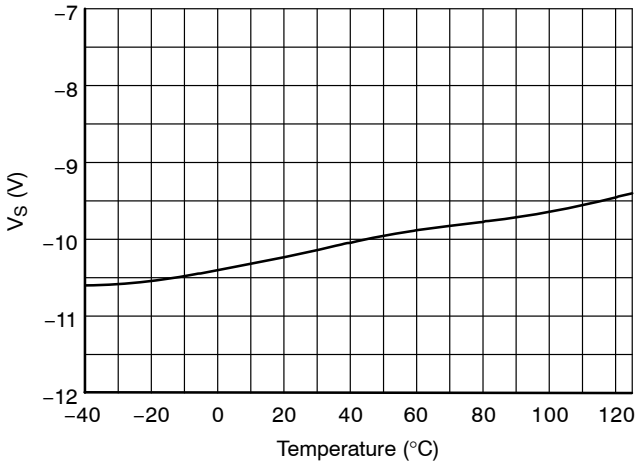

Figure 25. Allowable Negative V_S Voltage vs. Temperature

SWITCHING TIME DEFINITIONS

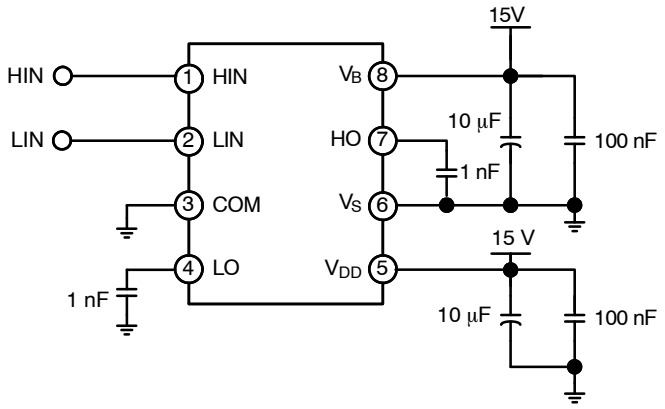

Figure 26. Switching Time Test Circuit (Referenced 8−SOP)

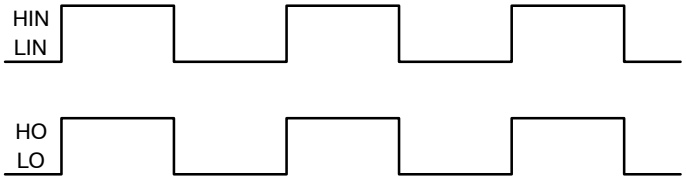

Figure 27. Input/Output Timing Diagram

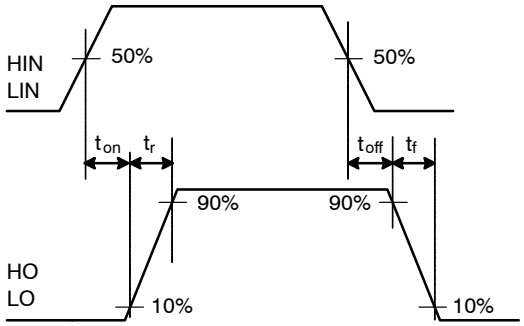

Figure 28. Switching Time Waveform Definitions

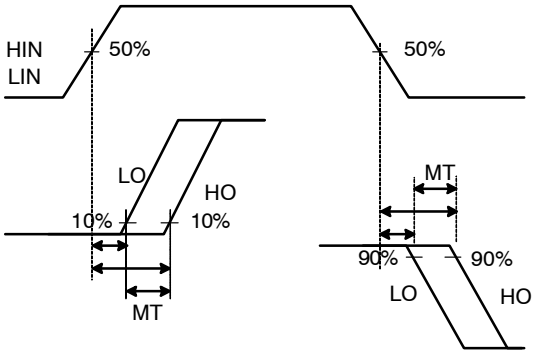

Figure 29. Delay Matching Waveform Definitions

ORDERING INFORMATION

Device	Package	Operating Temperature Range	Shipping†
FAN7390MX	SOIC8 8−SOP (Pb−Free)	−40°C~125°C	3000 / Tape & Reel
FAN7390M1X	SOIC14 14−SOP (Pb−Free)		3000 / Tape & Reel

†For information on tape and reel specifications, including part orientation and tape sizes, please refer to our Tape and Reel Packaging Specifications Brochure, BRD8011/D.

SOIC8
CASE 751EG
ISSUE O

DATE 30 SEP 2016

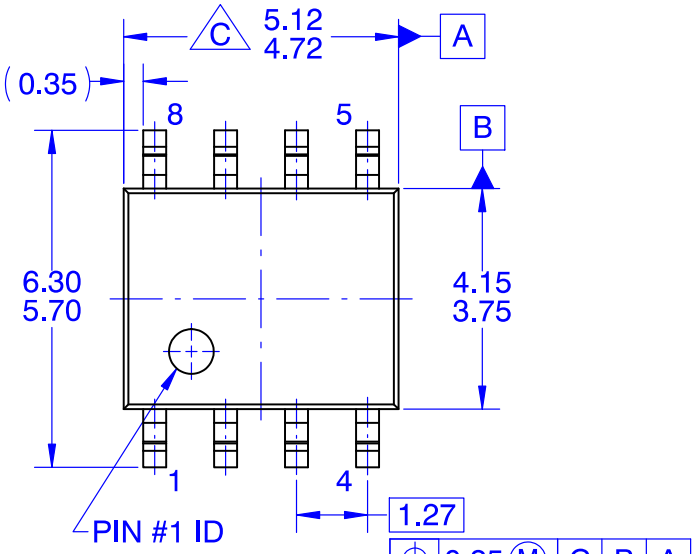

TOP VIEW

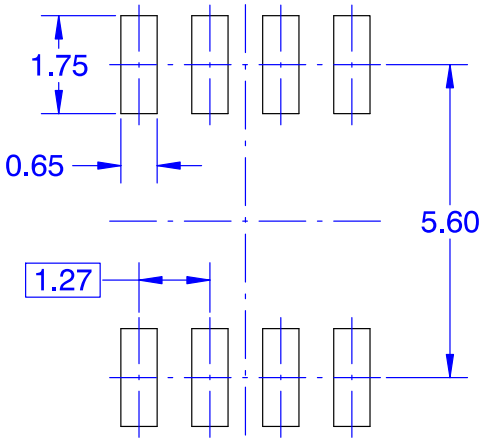

LAND PATTERN RECOMMENDATION

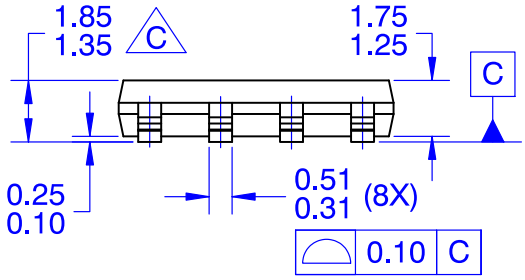

FRONT VIEW

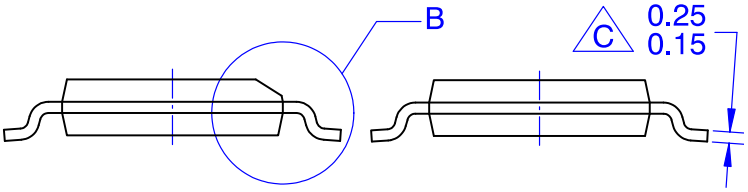

OPTION A
BEVEL EDGE

OPTION B
NON–BEVEL EDGE

SIDE VIEW

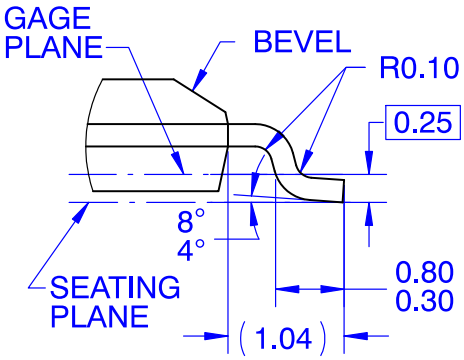

DETAIL "B"
SCALE 2:1

NOTES: UNLESS OTHERWISED SPECIFIED

A. THIS PACKAGE CONFORMS TO JEDEC MS–012 VARIATION A EXCEPT WHERE NOTED.
B. ALL DIMENSIONS ARE IN MILLIMETERS
C. OUT OF JEDEC STANDARD VALUE
D. DIMENSIONS ARE EXCLUSIVE OF BURRS, MOLD FLASH AND TIE BAR EXTRUSIONS.
E. LAND PATTERN AS PER IPC SOIC127P600X175–8M

DOCUMENT NUMBER:	**98AON13741G**	Electronic versions are uncontrolled except when accessed directly from the Document Repository. Printed versions are uncontrolled except when stamped "CONTROLLED COPY" in red.
DESCRIPTION:	**SOIC8**	**PAGE 1 OF 1**

ON Semiconductor and ON are trademarks of Semiconductor Components Industries, LLC dba ON Semiconductor or its subsidiaries in the United States and/or other countries. ON Semiconductor reserves the right to make changes without further notice to any products herein. ON Semiconductor makes no warranty, representation or guarantee regarding the suitability of its products for any particular purpose, nor does ON Semiconductor assume any liability arising out of the application or use of any product or circuit, and specifically disclaims any and all liability, including without limitation special, consequential or incidental damages. ON Semiconductor does not convey any license under its patent rights nor the rights of others.

SOIC14 N
CASE 751ER
ISSUE O

DATE 31 DEC 2016

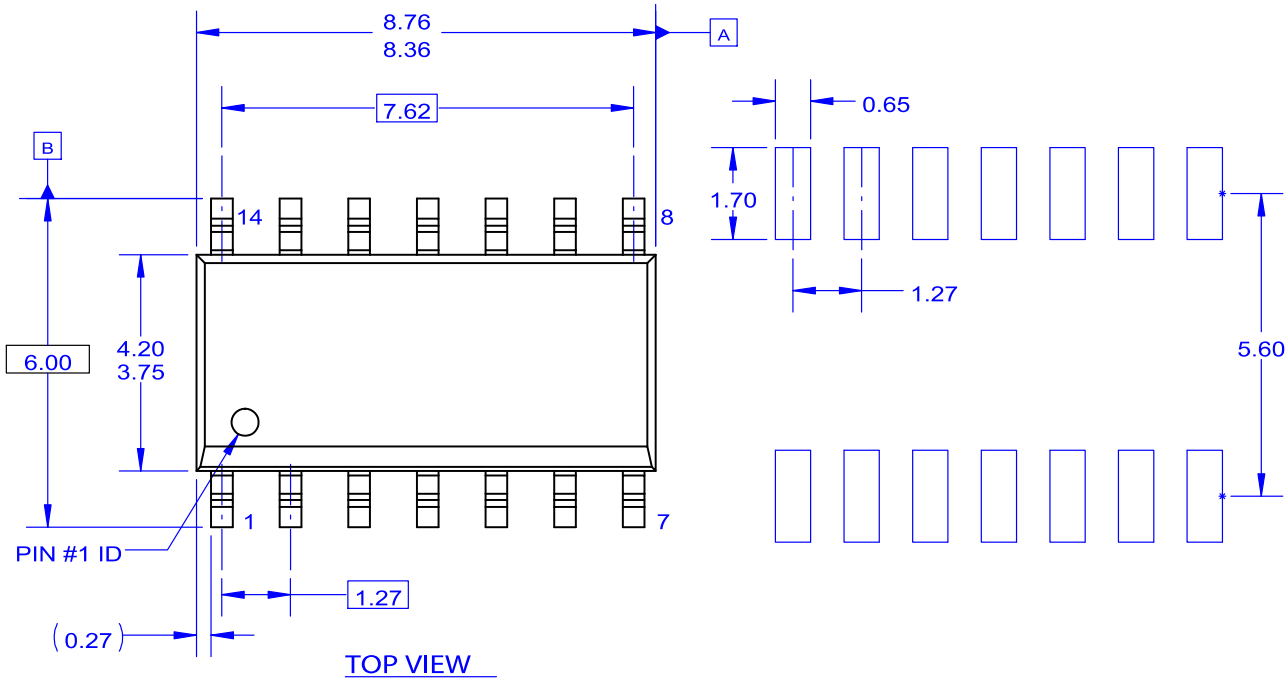

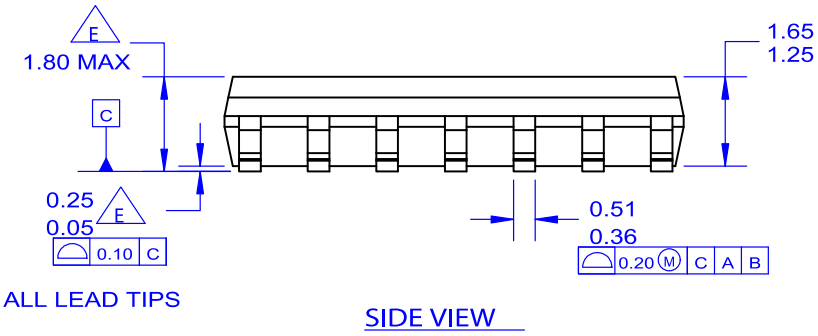

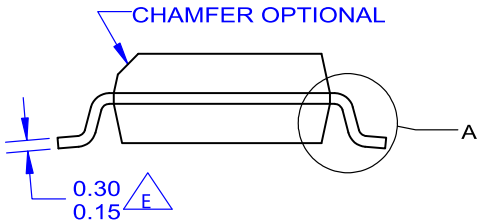

NOTES: UNLESS OTHERWISE SPECIFIED

A. THIS PACKAGE REFERENCE TO JEDEC MS-012 VARIATION AB.
B. ALL DIMENSIONS ARE IN MILLIMETERS.
C. DIMENSIONS ARE EXCLUSIVE OF BURRS, MOLD FLASH AND TIE BAR EXTRUSIONS.
D. DIMENSIONS AND TOLERANCES AS PER ASME Y14.5-1994.
E. OUT OF JEDEC STANDARD VALUE.

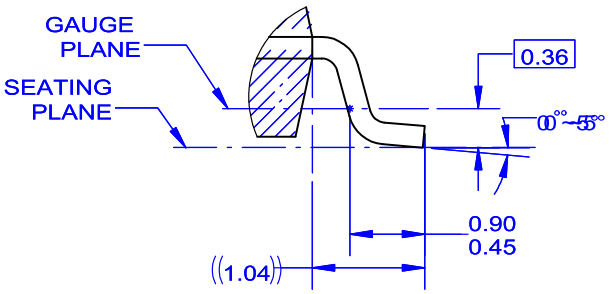

DETAIL "A"
SCALE 2:1

DOCUMENT NUMBER:	98AON13761G	Electronic versions are uncontrolled except when accessed directly from the Document Repository. Printed versions are uncontrolled except when stamped "CONTROLLED COPY" in red.
DESCRIPTION:	SOIC14 N	PAGE 1 OF 1

ON Semiconductor and ON are trademarks of Semiconductor Components Industries, LLC dba ON Semiconductor or its subsidiaries in the United States and/or other countries. ON Semiconductor reserves the right to make changes without further notice to any products herein. ON Semiconductor makes no warranty, representation or guarantee regarding the suitability of its products for any particular purpose, nor does ON Semiconductor assume any liability arising out of the application or use of any product or circuit, and specifically disclaims any and all liability, including without limitation special, consequential or incidental damages. ON Semiconductor does not convey any license under its patent rights nor the rights of others.

onsemi, onsemi, and other names, marks, and brands are registered and/or common law trademarks of Semiconductor Components Industries, LLC dba "**onsemi**" or its affiliates and/or subsidiaries in the United States and/or other countries. **onsemi** owns the rights to a number of patents, trademarks, copyrights, trade secrets, and other intellectual property. A listing of **onsemi**'s product/patent coverage may be accessed at www.onsemi.com/site/pdf/Patent−Marking.pdf. **onsemi** reserves the right to make changes at any time to any products or information herein, without notice. The information herein is provided "as−is" and **onsemi** makes no warranty, representation or guarantee regarding the accuracy of the information, product features, availability, functionality, or suitability of its products for any particular purpose, nor does **onsemi** assume any liability arising out of the application or use of any product or circuit, and specifically disclaims any and all liability, including without limitation special, consequential or incidental damages. Buyer is responsible for its products and applications using **onsemi** products, including compliance with all laws, regulations and safety requirements or standards, regardless of any support or applications information provided by **onsemi**. "Typical" parameters which may be provided in **onsemi** data sheets and/or specifications can and do vary in different applications and actual performance may vary over time. All operating parameters, including "Typicals" must be validated for each customer application by customer's technical experts. **onsemi** does not convey any license under any of its intellectual property rights nor the rights of others. **onsemi** products are not designed, intended, or authorized for use as a critical component in life support systems or any FDA Class 3 medical devices or medical devices with a same or similar classification in a foreign jurisdiction or any devices intended for implantation in the human body. Should Buyer purchase or use **onsemi** products for any such unintended or unauthorized application, Buyer shall indemnify and hold **onsemi** and its officers, employees, subsidiaries, affiliates, and distributors harmless against all claims, costs, damages, and expenses, and reasonable attorney fees arising out of, directly or indirectly, any claim of personal injury or death associated with such unintended or unauthorized use, even if such claim alleges that **onsemi** was negligent regarding the design or manufacture of the part. **onsemi** is an Equal Opportunity/Affirmative Action Employer. This literature is subject to all applicable copyright laws and is not for resale in any manner.

ADDITIONAL INFORMATION

TECHNICAL PUBLICATIONS:
Technical Library: www.onsemi.com/design/resources/technical−documentation
onsemi Website: www.onsemi.com

ONLINE SUPPORT: www.onsemi.com/support
For additional information, please contact your local Sales Representative at
www.onsemi.com/support/sales