MOSFET - N-Channel, SOT-23

500 mA, 60 V

MMBF170L, NVBF170L

500 mA, 60 V
$R_{DS(on)}$ = 5 Ω

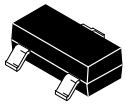

SOT−23
CASE 318
STYLE 21

N−Channel

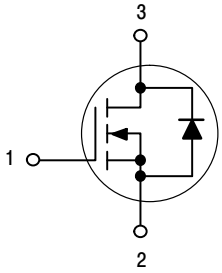

Features

- NVBF Prefix for Automotive and Other Applications Requiring Unique Site and Control Change Requirements; AEC−Q101 Qualified and PPAP Capable
- These Devices are Pb−Free and are RoHS Compliant

MAXIMUM RATINGS

Rating	Symbol	Value	Unit
Drain−Source Voltage	V_{DSS}	60	Vdc
Drain−Gate Voltage	V_{DGS}	60	Vdc
Gate−Source Voltage − Continuous − Non−repetitive ($t_p \leq 50$ μs)	 V_{GS} V_{GSM}	 ±20 ±40	 Vdc Vpk
Drain Current − Continuous − Pulsed	I_D I_{DM}	0.5 0.8	Adc

THERMAL CHARACTERISTICS

Characteristic	Symbol	Max	Unit
Total Device Dissipation FR−5 Board (Note 1.) T_A = 25°C Derate above 25°C	P_D	 225 1.8	 mW mW/°C
Thermal Resistance, Junction−to−Ambient	$R_{\theta JA}$	556	°C/W
Junction and Storage Temperature	T_J, T_{stg}	−55 to +150	°C

Stresses exceeding those listed in the Maximum Ratings table may damage the device. If any of these limits are exceeded, device functionality should not be assumed, damage may occur and reliability may be affected.

1. FR−5 = 1.0 × 0.75 × 0.062 in.

MARKING DIAGRAM & PIN ASSIGNMENT

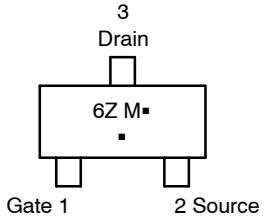

6Z = Specific Device Code
M = Date Code
▪ = Pb−Free Package
(Note: Microdot may be in either location)

ORDERING INFORMATION

See detailed ordering and shipping information in the package dimensions section on page 2 of this data sheet.

© Semiconductor Components Industries, LLC, 1994

ELECTRICAL CHARACTERISTICS (T_C = 25°C unless otherwise noted)

Characteristic	Symbol	Min	Max	Unit
OFF CHARACTERISTICS				
Drain−Source Breakdown Voltage (V_{GS} = 0, I_D = 100 μA)	$V_{(BR)DSS}$	60	–	Vdc
Gate−Body Leakage Current, Forward (V_{GSF} = 15 Vdc, V_{DS} = 0)	I_{GSS}	–	10	nAdc
ON CHARACTERISTICS (Note 1)				
Gate Threshold Voltage (V_{DS} = V_{GS}, I_D = 1.0 mA)	$V_{GS(th)}$	0.8	3.0	Vdc
Static Drain−Source On−Resistance (V_{GS} = 10 Vdc, I_D = 200 mA)	$r_{DS(on)}$	–	5.0	Ω
On−State Drain Current (V_{DS} = 25 Vdc, V_{GS} = 0)	$I_{D(off)}$	–	0.5	μA
DYNAMIC CHARACTERISTICS				
Input Capacitance (V_{DS} = 10 Vdc, V_{GS} = 0 V, f = 1.0 MHz)	C_{iss}	–	60	pF
SWITCHING CHARACTERISTICS (Note 1)				
Turn−On Delay Time (V_{DD} = 25 Vdc, I_D = 500 mA, R_{gen} = 50 Ω) Figure 1	$t_{d(on)}$	–	10	ns
Turn−Off Delay Time	$t_{d(off)}$	–	10	

Product parametric performance is indicated in the Electrical Characteristics for the listed test conditions, unless otherwise noted. Product performance may not be indicated by the Electrical Characteristics if operated under different conditions.

1. Pulse Test: Pulse Width ≤ 300 μs, Duty Cycle ≤ 2.0%.

ORDERING INFORMATION

Device	Package	Shipping†
MMBF170LT1G	SOT−23 (TO−236) (Pb−Free)	3000 / Tape & Reel
MMBF170LT3G	SOT−23 (TO−236) (Pb−Free)	10000 / Tape & Reel
NVBF170LT1G*	SOT−23 (TO−236) (Pb−Free)	3000 / Tape & Reel

†For information on tape and reel specifications, including part orientation and tape sizes, please refer to our Tape and Reel Packaging Specifications Brochure, BRD8011/D.

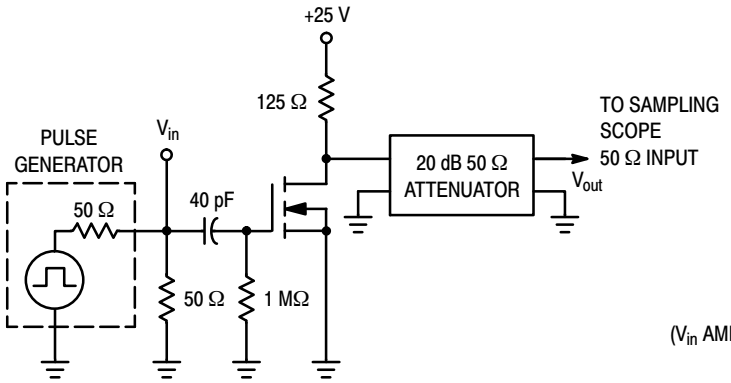

Figure 1. Switching Test Circuit

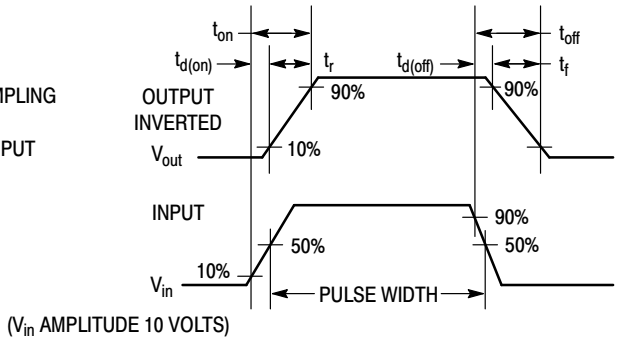

Figure 2. Switching Waveform

TYPICAL ELECTRICAL CHARACTERISTICS

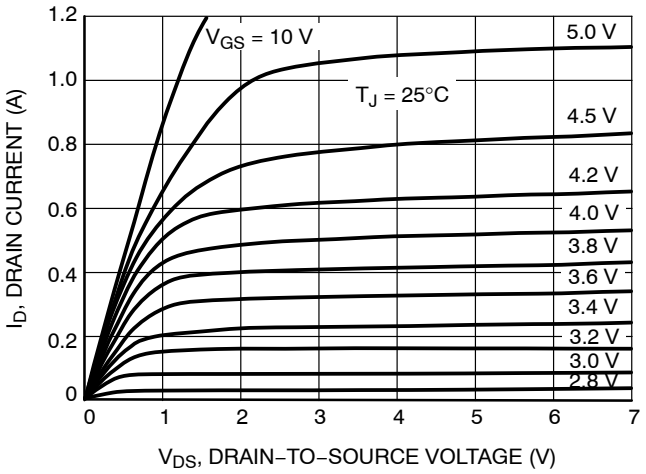

Figure 3. On−Region Characteristics

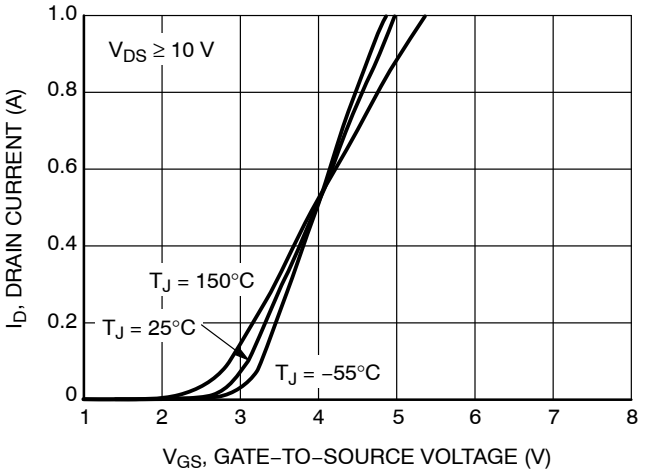

Figure 4. Transfer Characteristics

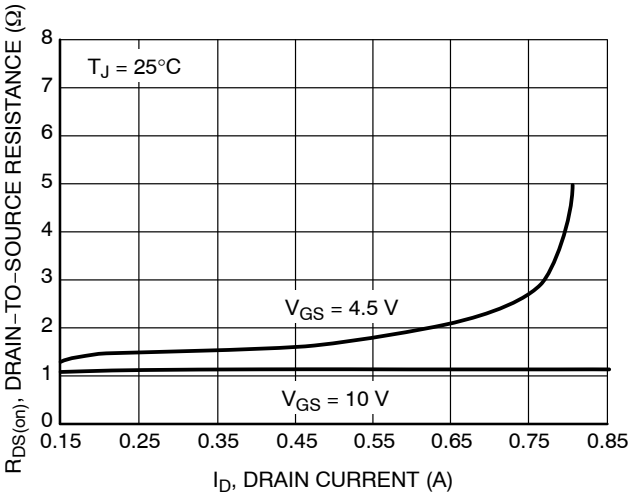

Figure 5. On−Resistance vs. Drain Current and Gate Voltage

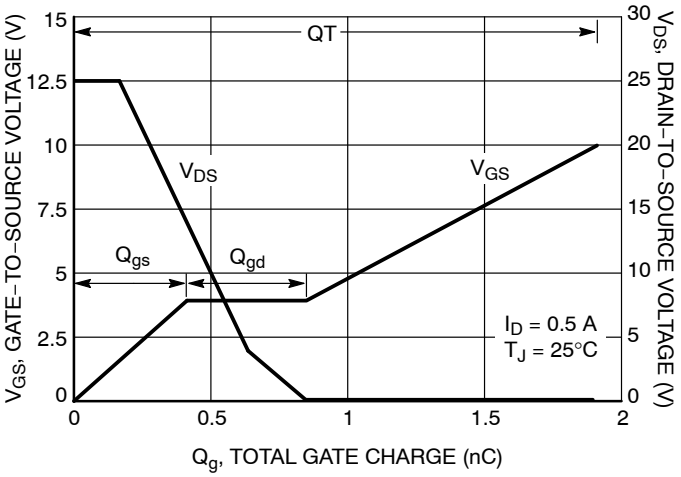

Figure 6. Gate−to−Source and Drain−to−Source Voltage vs. Total Charge

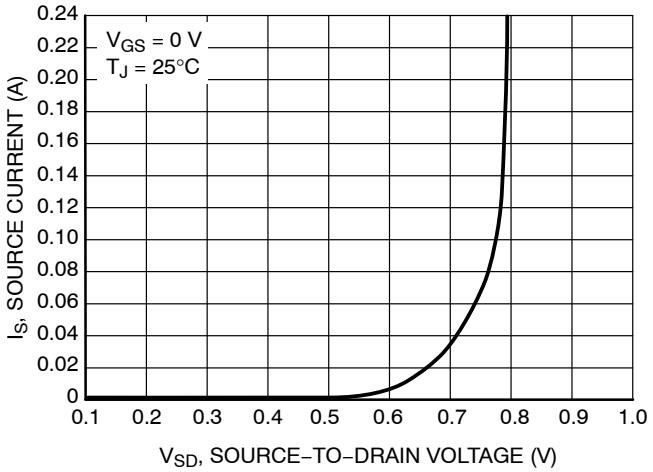

Figure 7. Diode Forward Voltage vs. Current

TYPICAL ELECTRICAL CHARACTERISTICS

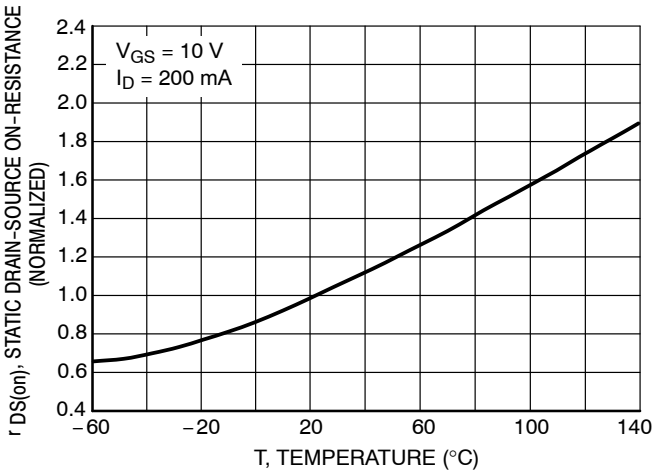

Figure 8. Temperature versus Static Drain−Source On−Resistance

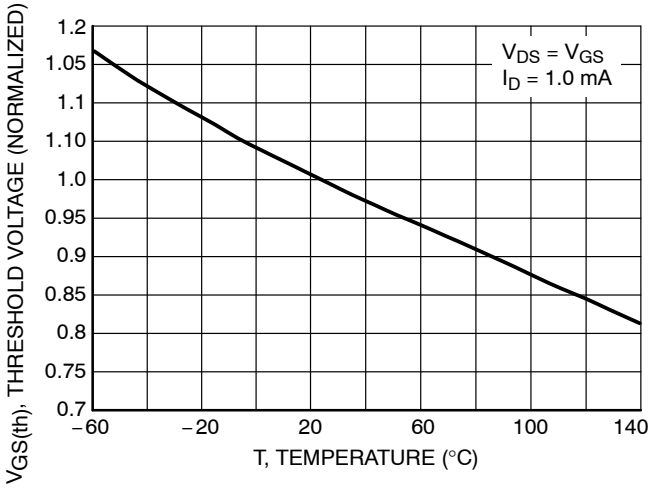

Figure 9. Temperature versus Gate Threshold Voltage

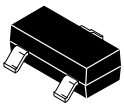

SCALE 4:1

SOT−23 (TO−236) 2.90x1.30x1.00 1.90P
CASE 318
ISSUE AU

DATE 14 AUG 2024

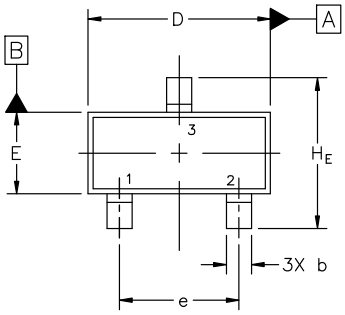

TOP VIEW

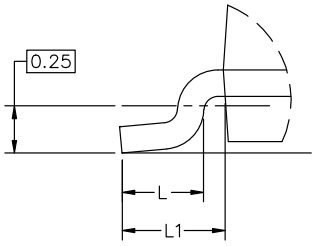

DETAIL "A"
Scale 3:1

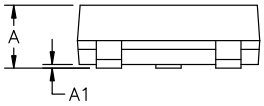

SIDE VIEW

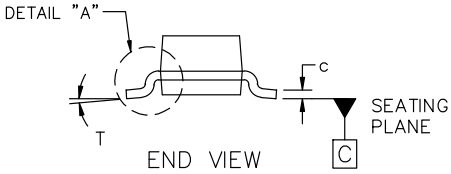

END VIEW

MILLIMETERS			
DIM	MIN	NOM	MAX
A	0.89	1.00	1.11
A1	0.01	0.06	0.10
b	0.37	0.44	0.50
c	0.08	0.14	0.20
D	2.80	2.90	3.04
E	1.20	1.30	1.40
e	1.78	1.90	2.04
L	0.30	0.43	0.55
L1	0.35	0.54	0.69
H_E	2.10	2.40	2.64
T	0°	−−−	10°

NOTES:
1. DIMENSIONING AND TOLERANCING PER ASME Y14.5M, 2018.
2. CONTROLLING DIMENSIONS: MILLIMETERS.
3. MAXIMUM LEAD THICKNESS INCLUDES LEAD FINISH. MINIMUM LEAD THICKNESS IS THE MINIMUM THICKNESS OF THE BASE MATERIAL.
4. DIMENSIONS D AND E DO NOT INCLUDE MOLD FLASH, PROTRUSIONS, OR GATE BURRS.

GENERIC MARKING DIAGRAM*

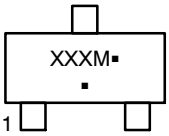

XXX = Specific Device Code
M = Date Code
▪ = Pb−Free Package

*This information is generic. Please refer to device data sheet for actual part marking. Pb−Free indicator, "G" or microdot "▪", may or may not be present. Some products may not follow the Generic Marking.

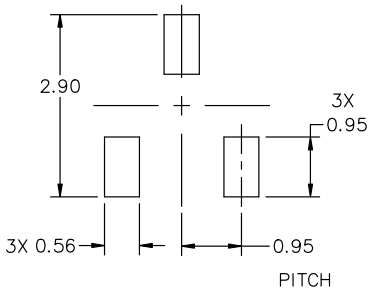

RECOMMENDED
MOUNTING FOOTPRINT

* For additional information on our Pb−Free strategy and soldering details, please download the onsemi Soldering and Mounting Techniques Reference Manual, SOLDERRM/D.

STYLES ON PAGE 2

DOCUMENT NUMBER:	**98ASB42226B**	Electronic versions are uncontrolled except when accessed directly from the Document Repository. Printed versions are uncontrolled except when stamped "CONTROLLED COPY" in red.
DESCRIPTION:	**SOT−23 (TO−236) 2.90x1.30x1.00 1.90P**	**PAGE 1 OF 2**

onsemi and onsemi are trademarks of Semiconductor Components Industries, LLC dba **onsemi** or its subsidiaries in the United States and/or other countries. **onsemi** reserves the right to make changes without further notice to any products herein. **onsemi** makes no warranty, representation or guarantee regarding the suitability of its products for any particular purpose, nor does **onsemi** assume any liability arising out of the application or use of any product or circuit, and specifically disclaims any and all liability, including without limitation special, consequential or incidental damages. **onsemi** does not convey any license under its patent rights nor the rights of others.

SOT−23 (TO−236) 2.90x1.30x1.00 1.90P
CASE 318
ISSUE AU

DATE 14 AUG 2024

STYLE 1 THRU 5:
CANCELLED

STYLE 6:
PIN 1. BASE
2. EMITTER
3. COLLECTOR

STYLE 7:
PIN 1. EMITTER
2. BASE
3. COLLECTOR

STYLE 8:
PIN 1. ANODE
2. NO CONNECTION
3. CATHODE

STYLE 9:
PIN 1. ANODE
2. ANODE
3. CATHODE

STYLE 10:
PIN 1. DRAIN
2. SOURCE
3. GATE

STYLE 11:
PIN 1. ANODE
2. CATHODE
3. CATHODE−ANODE

STYLE 12:
PIN 1. CATHODE
2. CATHODE
3. ANODE

STYLE 13:
PIN 1. SOURCE
2. DRAIN
3. GATE

STYLE 14:
PIN 1. CATHODE
2. GATE
3. ANODE

STYLE 15:
PIN 1. GATE
2. CATHODE
3. ANODE

STYLE 16:
PIN 1. ANODE
2. CATHODE
3. CATHODE

STYLE 17:
PIN 1. NO CONNECTION
2. ANODE
3. CATHODE

STYLE 18:
PIN 1. NO CONNECTION
2. CATHODE
3. ANODE

STYLE 19:
PIN 1. CATHODE
2. ANODE
3. CATHODE−ANODE

STYLE 20:
PIN 1. CATHODE
2. ANODE
3. GATE

STYLE 21:
PIN 1. GATE
2. SOURCE
3. DRAIN

STYLE 22:
PIN 1. RETURN
2. OUTPUT
3. INPUT

STYLE 23:
PIN 1. ANODE
2. ANODE
3. CATHODE

STYLE 24:
PIN 1. GATE
2. DRAIN
3. SOURCE

STYLE 25:
PIN 1. ANODE
2. CATHODE
3. GATE

STYLE 26:
PIN 1. CATHODE
2. ANODE
3. NO CONNECTION

STYLE 27:
PIN 1. CATHODE
2. CATHODE
3. CATHODE

STYLE 28:
PIN 1. ANODE
2. ANODE
3. ANODE

onsemi and onsemi are trademarks of Semiconductor Components Industries, LLC dba **onsemi** or its subsidiaries in the United States and/or other countries. **onsemi** reserves the right to make changes without further notice to any products herein. **onsemi** makes no warranty, representation or guarantee regarding the suitability of its products for any particular purpose, nor does **onsemi** assume any liability arising out of the application or use of any product or circuit, and specifically disclaims any and all liability, including without limitation special, consequential or incidental damages. **onsemi** does not convey any license under its patent rights nor the rights of others.

© Semiconductor Components Industries, LLC, 2019

onsemi, onsemi, and other names, marks, and brands are registered and/or common law trademarks of Semiconductor Components Industries, LLC dba "**onsemi**" or its affiliates and/or subsidiaries in the United States and/or other countries. **onsemi** owns the rights to a number of patents, trademarks, copyrights, trade secrets, and other intellectual property. A listing of **onsemi**'s product/patent coverage may be accessed at www.onsemi.com/site/pdf/Patent−Marking.pdf. **onsemi** reserves the right to make changes at any time to any products or information herein, without notice. The information herein is provided "as−is" and **onsemi** makes no warranty, representation or guarantee regarding the accuracy of the information, product features, availability, functionality, or suitability of its products for any particular purpose, nor does **onsemi** assume any liability arising out of the application or use of any product or circuit, and specifically disclaims any and all liability, including without limitation special, consequential or incidental damages. Buyer is responsible for its products and applications using **onsemi** products, including compliance with all laws, regulations and safety requirements or standards, regardless of any support or applications information provided by **onsemi**. "Typical" parameters which may be provided in **onsemi** data sheets and/or specifications can and do vary in different applications and actual performance may vary over time. All operating parameters, including "Typicals" must be validated for each customer application by customer's technical experts. **onsemi** does not convey any license under any of its intellectual property rights nor the rights of others. **onsemi** products are not designed, intended, or authorized for use as a critical component in life support systems or any FDA Class 3 medical devices or medical devices with a same or similar classification in a foreign jurisdiction or any devices intended for implantation in the human body. Should Buyer purchase or use **onsemi** products for any such unintended or unauthorized application, Buyer shall indemnify and hold **onsemi** and its officers, employees, subsidiaries, affiliates, and distributors harmless against all claims, costs, damages, and expenses, and reasonable attorney fees arising out of, directly or indirectly, any claim of personal injury or death associated with such unintended or unauthorized use, even if such claim alleges that **onsemi** was negligent regarding the design or manufacture of the part. **onsemi** is an Equal Opportunity/Affirmative Action Employer. This literature is subject to all applicable copyright laws and is not for resale in any manner.

ADDITIONAL INFORMATION

TECHNICAL PUBLICATIONS:
Technical Library: www.onsemi.com/design/resources/technical−documentation
onsemi Website: www.onsemi.com

ONLINE SUPPORT: www.onsemi.com/support
For additional information, please contact your local Sales Representative at
www.onsemi.com/support/sales