NCV51411

Buck Converter - Low Voltage, Synchronization Capability

1.5 A, 260 kHz

The NCV51411 is a 1.5 A buck regulator IC operating at a fixed−frequency of 260 kHz. The device uses the V^2™ control architecture to provide unmatched transient response, the best overall regulation and the simplest loop compensation for today's high−speed logic. The NCV51411 accommodates input voltages from 4.5 V to 40 V and contains synchronization circuitry.

The on−chip NPN transistor is capable of providing a minimum of 1.5 A of output current, and is biased by an external "boost" capacitor to ensure saturation, thus minimizing on−chip power dissipation. Protection circuitry includes thermal shutdown, cycle−by−cycle current limiting and frequency foldback. The NCV51411 is functionally pin−compatible with the LT1375.

Features

- V^2 Architecture Provides Ultra−Fast Transient Response, Improved Regulation and Simplified Design
- 2.0% Error Amp Reference Voltage Tolerance
- Switch Frequency Decrease of 4:1 in Short Circuit Conditions Reduces Short Circuit Power Dissipation
- BOOST Lead Allows "Bootstrapped" Operation to Maximize Efficiency
- Sync Function for Parallel Supply Operation or Noise Minimization
- Shutdown Pin Provides Power−Down Option
- 85 μA Quiescent Current During Power−Down
- Thermal Shutdown
- Soft−Start
- Pin Compatible with LT1375 (SO−8 Version)
- NCV Prefix for Automotive and Other Applications Requiring Unique Site and Control Change Requirements; AEC−Q100 Qualified and PPAP Capable
- These Devices are Pb−Free and are RoHS Compliant

ON Semiconductor®

http://onsemi.com

MARKING DIAGRAMS

SO−8
D SUFFIX
CASE 751

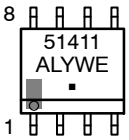

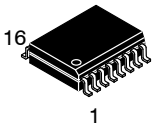

SO−16W EP
PW SUFFIX
CASE 751AG

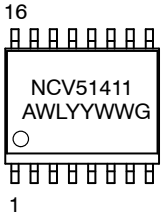

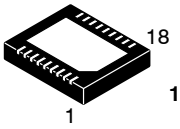

18−LEAD DFN
MN SUFFIX
CASE 505

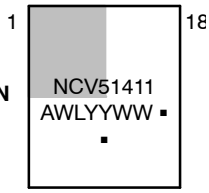

A	= Assembly Location
L, WL	= Wafer Lot
Y, YY	= Year
W, WW	= Work Week
E	= Automotive Grade
▪ or G	= Pb−Free Package

(Note: Microdot may be in either location)

ORDERING INFORMATION

See detailed ordering and shipping information in the package dimensions section on page 13 of this data sheet.

© Semiconductor Components Industries, LLC, 2013

August, 2019 − Rev. 16

Publication Order Number:
NCV51411/D

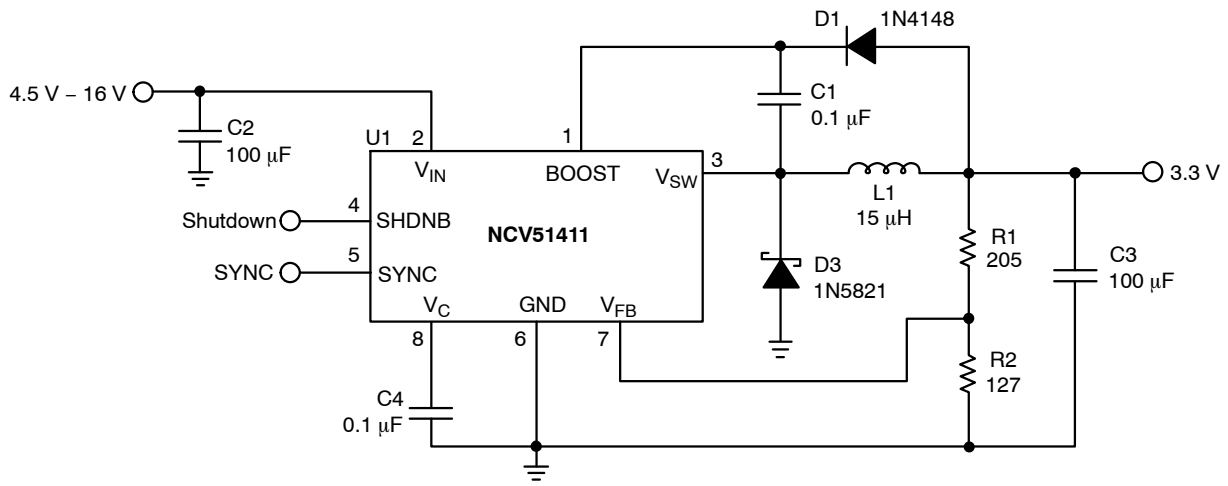

Figure 1. Application Diagram, 4.5 V – 16 V to 3.3 V @ 1.0 A Converter

MAXIMUM RATINGS*

Rating	Value	Unit
Peak Transient Voltage (31 V Load Dump @ V_{IN} = 14 V)	45	V
Operating Junction Temperature Range, T_J	−40 to 150	°C
Lead Temperature Soldering: Reflow: (Note 1)	240 peak (Note 2)	°C
Storage Temperature Range, T_S	−65 to +150	°C
ESD (Human Body Model) (Machine Model) (Charge Device Model)	2.0 200 >1.0	kV V kV
Package Thermal Resistance SO−8 Junction−to−Case, $R_{\theta JC}$ SO−8 Junction−to−Ambient, $R_{\theta JA}$ SO−16 Junction−to−Case, $R_{\theta JC}$ SO−16 Junction−to−Ambient, $R_{\theta JA}$ (Note 3) 18−Lead DFN Junction−to−Ambient, $R_{\theta JA}$ (Note 3)	 45 165 16 35 38	 °C/W °C/W °C/W °C/W °C/W

Stresses exceeding Maximum Ratings may damage the device. Maximum Ratings are stress ratings only. Functional operation above the Recommended Operating Conditions is not implied. Extended exposure to stresses above the Recommended Operating Conditions may affect device reliability.

*The maximum package power dissipation must be observed.

1. 60 second maximum above 183°C.
2. −5°C/0°C allowable conditions.
3. 4 layer board, 1 oz copper outer layers, 0.5 oz copper inner layers, 600 sqmm copper area

MAXIMUM RATINGS (Voltages are with respect to GND)

Pin Name	V_{Max}	V_{MIN}	I_{SOURCE}	I_{SINK}
V_{IN} (DC)*	40 V	−0.3 V	N/A	4.0 A
BOOST	40 V	−0.3 V	N/A	100 mA
V_{SW}	40 V	−0.6 V/−1.0 V, t < 50 ns	4.0 A	10 mA
V_C	7.0 V	−0.3 V	1.0 mA	1.0 mA
SHDNB	7.0 V	−0.3 V	1.0 mA	1.0 mA
SYNC	7.0 V	−0.3 V	1.0 mA	1.0 mA
V_{FB}	7.0 V	−0.3 V	1.0 mA	1.0 mA

*See table above for load dump.

PACKAGE PIN DESCRIPTION

SO−8	SO−16	DFN−18	PIN SYMBOL	FUNCTION
1	15	1	BOOST	The BOOST pin provides additional drive voltage to the on−chip NPN power transistor. The resulting decrease in switch on voltage increases efficiency.
2	16	2, 3, 4	V_{IN}	This pin is the main power input to the IC.
3	1	5, 6, 7	V_{SW}	This is the connection to the emitter of the on−chip NPN power transistor and serves as the switch output to the inductor. This pin may be subjected to negative voltages during switch off−time. A catch diode is required to clamp the pin voltage in normal operation. This node can stand −1.0 V for less than 50 ns during switch node flyback.
4	2	8	SHDNB	Shutdown_bar input. This is an active−low logical input, TTL compatible, with an internal pull−up current source. The IC goes into sleep mode, drawing less than 85 μA when the pin voltage is pulled below 1.0 V. This pin may be left floating in applications where a shutdown function is not required.
5	7	10	SYNC	This pin provides the synchronization input.
6	8	13	GND	Power return connection for the IC.
7	9	16	V_{FB}	The FB pin provides input to the inverting input of the error amplifier. If V_{FB} is lower than 0.29 V, the oscillator frequency is divided by four, and current limit folds back to about 1 ampere. These features protect the IC under severe overcurrent or short circuit conditions.
8	10	17	V_C	The V_C pin provides a connection point to the output of the error amplifier and input to the PWM comparator. Driving of this pin should be avoided because on−chip test circuitry becomes active whenever current exceeding 0.5 mA is forced into the IC.
–	3 – 6, 11 – 14	9, 11, 12, 14, 15, 18	NC	No Connection

PIN CONNECTIONS

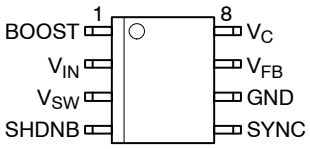

SO−8

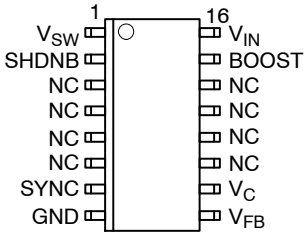

SO−16W EP

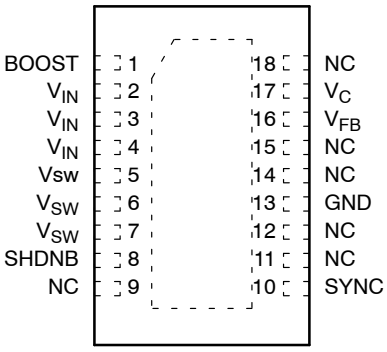

18−Lead DFN

Note: DFN exposed pad may be soldered to a heat spreader for enhanced thermal performance. The exposed pad may be connected to GND; do not connect to any other potential.

ELECTRICAL CHARACTERISTICS (–40°C < T_J < 125°C, 4.5 V< V_{IN} < 40 V; unless otherwise specified.)

Characteristic	Test Conditions	Min	Typ	Max	Unit
Oscillator					
Operating Frequency	–	224	260	296	kHz
Frequency Line Regulation	–	–	0.05	0.15	%/V
Maximum Duty Cycle	–	85	90	95	%
V_{FB} Frequency Foldback Threshold	–	0.29	0.32	0.36	V
PWM Comparator					
Slope Compensation Voltage	Fix V_{FB}, $\Delta V_C/\Delta T_{ON}$	8.0	17	26	mV/μs
Minimum Output Pulse Width	V_{FB} to V_{SW}	–	150	300	ns
Power Switch					
Current Limit	V_{FB} > 0.36 V	1.6	2.3	3.0	A
Foldback Current	V_{FB} < 0.29 V	0.9	1.5	2.1	A
Saturation Voltage	I_{OUT} = 1.5 A, V_{BOOST} = V_{IN} + 2.5 V	0.4	0.7	1.0	V
Current Limit Delay	Note 4	–	120	160	ns
Error Amplifier					
Internal Reference Voltage	–	1.244	1.270	1.296	V
Reference PSRR	Note 4	–	40	–	dB
FB Input Bias Current	–	–	0.02	0.1	μA
Output Source Current	V_C = 1.270 V, V_{FB} = 1.0 V	15	25	35	μA
Output Sink Current	V_C = 1.270 V, V_{FB} = 2.0 V	15	25	35	μA
Output High Voltage	V_{FB} = 1.0 V	1.39	1.46	1.53	V
Output Low Voltage	V_{FB} = 2.0 V	5.0	20	60	mV
Unity Gain Bandwidth	Note 4	–	500	–	kHz
Open Loop Amplifier Gain	Note 4	–	70	–	dB
Amplifier Transconductance	Note 4	–	6.4	–	mA/V
Sync					
Sync Frequency Range	–	305	–	470	kHz
Sync Pin Bias Current	V_{SYNC} = 0 V V_{SYNC} = 5.0 V	– 230	0.1 360	0.2 485	μA μA
Sync Threshold Voltage	–	0.9	1.5	1.9	V
Shutdown					
Shutdown Threshold Voltage	I_{CC} = 2 mA	1.0	1.3	1.6	V
Shutdown Pin Bias Current	V_{SHDNB} = 0 V	0.14	5.00	35	μA
Thermal Shutdown					
Overtemperature Trip Point	Note 4	175	185	195	°C
Thermal Shutdown Hysteresis	Note 4	–	42	–	°C

4. Guaranteed by design, not 100% tested in production.

ELECTRICAL CHARACTERISTICS (continued) (–40°C < T_J < 125°C, 4.5 V< V_{IN} < 40 V; unless otherwise specified.)

Characteristic	Test Conditions	Min	Typ	Max	Unit
General					
Quiescent Current	I_{SW} = 0 A	–	4.0	6.25	mA
Shutdown Quiescent Current	V_{SHDNB} = 0 V	–	20	85	μA
Boost Operating Current	V_{BOOST} – V_{SW} = 2.5 V	6.0	15	40	mA/A
Minimum Boost Voltage	Note 5	–	–	2.5	V
Startup Voltage	–	2.2	3.3	4.4	V
Minimum Output Current	–	–	7.0	12	mA

5. Guaranteed by design, not 100% tested in production.

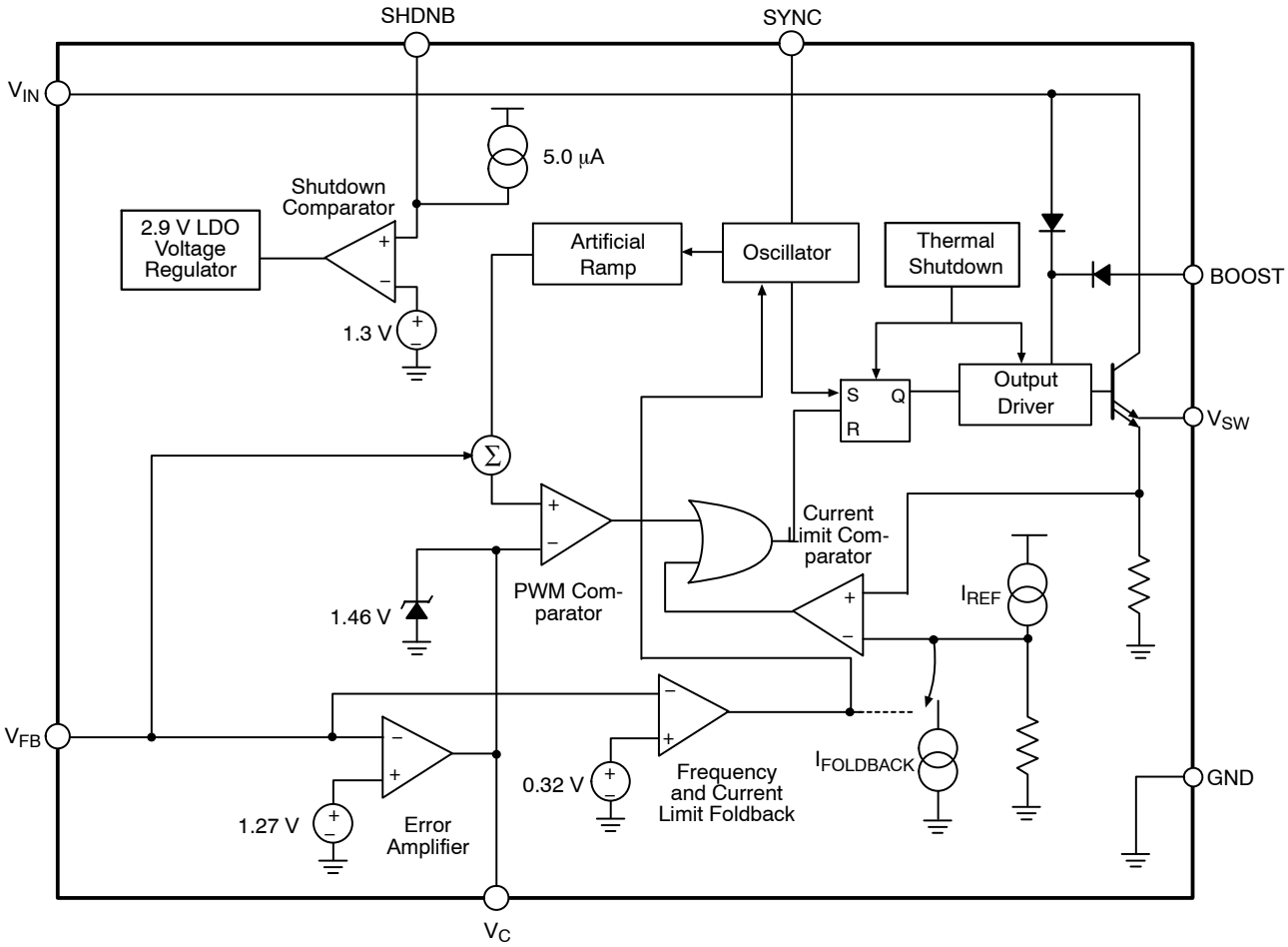

Figure 2. Block Diagram

APPLICATIONS INFORMATION

THEORY OF OPERATION

V^2 Control

The NCV51411 buck regulator provides a high level of integration and high operating frequencies allowing the layout of a switch−mode power supply in a very small board area. This device is based on the proprietary V^2 control architecture. V^2 control uses the output voltage and its ripple as the ramp signal, providing an ease of use not generally associated with voltage or current mode control. Improved line regulation, load regulation and very fast transient response are also major advantages.

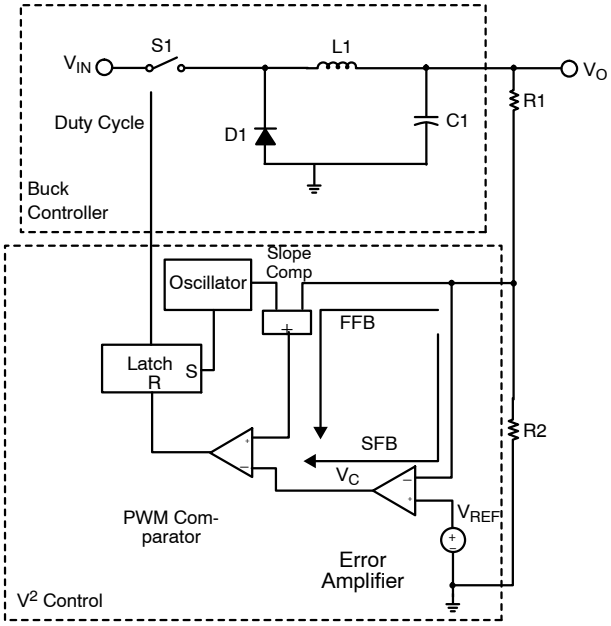

Figure 3. Buck Converter with V^2 Control.

As shown in Figure 3, there are two voltage feedback paths in V^2 control, namely FFB(Fast Feedback) and SFB(Slow Feedback). In FFB path, the feedback voltage connects directly to the PWM comparator. This feedback path carries the ramp signal as well as the output DC voltage. Artificial ramp derived from the oscillator is added to the feedback signal to improve stability. The other feedback path, SFB, connects the feedback voltage to the error amplifier whose output V_C feeds to the other input of the PWM comparator. In a constant frequency mode, the oscillator signal sets the output latch and turns on the switch S1. This starts a new switch cycle. The ramp signal, composed of both artificial ramp and output ripple, eventually comes across the V_C voltage, and consequently resets the latch to turn off the switch. The switch S1 will turn on again at the beginning of the next switch cycle. In a buck converter, the output ripple is determined by the ripple current of the inductor L1 and the ESR (equivalent series resistor) of the output capacitor C1.

The slope compensation signal is a fixed voltage ramp provided by the oscillator. Adding this signal eliminates subharmonic oscillation associated with the operation at duty cycle greater than 50%. The artificial ramp also ensures the proper PWM function when the output ripple voltage is inadequate. The slope compensation signal is properly sized to serve it purposes without sacrificing the transient response speed.

Under load and line transient, not only the ramp signal changes, but more significantly the DC component of the feedback voltage varies proportionally to the output voltage. FFB path connects both signals directly to the PWM comparator. This allows instant modulation of the duty cycle to counteract any output voltage deviations. The transient response time is independent of the error amplifier bandwidth. This eliminates the delay associated with error amplifier and greatly improves the transient response time. The error amplifier is used here to ensure excellent DC accuracy.

Error Amplifier

The NCV51411 has a transconductance error amplifier, whose non−inverting input is connected to an Internal Reference Voltage generated from the on−chip regulator. The inverting input connects to the V_{FB} pin. The output of the error amplifier is made available at the V_C pin. A typical frequency compensation requires only a 0.1 μF capacitor connected between the V_C pin and ground, as shown in Figure 1. This capacitor and error amplifier's output resistance (approximately 8.0 MΩ) create a low frequency pole to limit the bandwidth. Since V^2 control does not require a high bandwidth error amplifier, the frequency compensation is greatly simplified.

The V_C pin is clamped below Output High Voltage. This allows the regulator to recover quickly from over current or short circuit conditions.

Oscillator and Sync Feature

The on−chip oscillator is trimmed at the factory and requires no external components for frequency control. The high switching frequency allows smaller external components to be used, resulting in a board area and cost savings. The tight frequency tolerance simplifies magnetic components selection. The switching frequency is reduced to 25% of the nominal value when the V_{FB} pin voltage is below Frequency Foldback Threshold. In short circuit or over−load conditions, this reduces the power dissipation of the IC and external components.

An external clock signal can sync the NCV51411 to a higher frequency. The rising edge of the sync pulse turns on the power switch to start a new switching cycle, as shown in Figure 4. There is approximately 0.5 μs delay between the rising edge of the sync pulse and rising edge of the V_{SW} pin voltage. The sync threshold is TTL logic compatible, and

duty cycle of the sync pulses can vary from 10% to 90%. The frequency foldback feature is disabled during the sync mode.

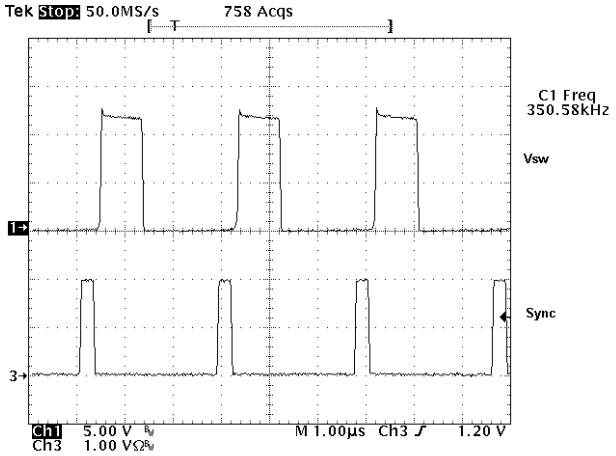

Figure 4. A NCV51411 Buck Regulator is Synchronized to an External 350 kHz Pulse Signal

Power Switch and Current Limit

The collector of the built−in NPN power switch is connected to the V_{IN} pin, and the emitter to the V_{SW} pin. When the switch turns on, the V_{SW} voltage is equal to the V_{IN} minus switch Saturation Voltage. In the buck regulator, the V_{SW} voltage swings to one diode drop below ground when the power switch turns off, and the inductor current is commutated to the catch diode. Due to the presence of high pulsed current, the traces connecting the V_{SW} pin, inductor and diode should be kept as short as possible to minimize the noise and radiation. For the same reason, the input capacitor should be placed close to the V_{IN} pin and the anode of the diode.

The saturation voltage of the power switch is dependent on the switching current, as shown in Figure 5.

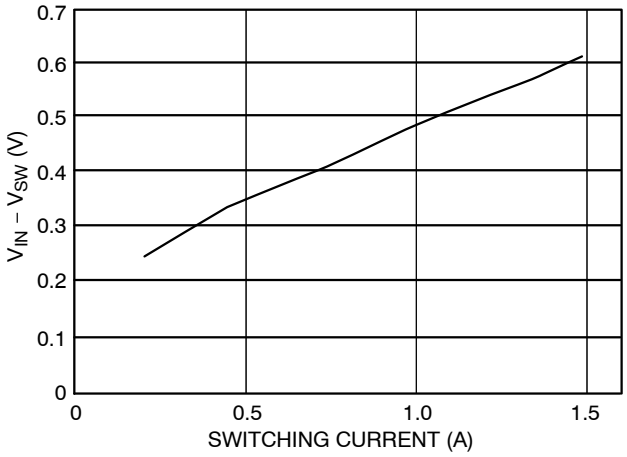

Figure 5. The Saturation Voltage of the Power Switch Increases with the Conducting Current

The NCV51411 contains pulse−by−pulse current limiting to protect the power switch and external components. When the peak of the switching current reaches the Current Limit, the power switch turns off after the Current Limit Delay. The switch will not turn on until the next switching cycle. The current limit threshold is independent of switching duty cycle. The maximum load current, given by the following formula under continuous conduction mode, is less than the Current Limit due to the ripple current.

$$I_{O(MAX)} = I_{LIM} - \frac{V_O(V_{IN} - V_O)}{2(L)(V_{IN})(f_S)}$$

where:

f_S = switching frequency,
I_{LIM} = current limit threshold,
V_O = output voltage,
V_{IN} = input voltage,
L = inductor value.

When the regulator runs under current limit, the subharmonic oscillation may cause low frequency oscillation, as shown in Figure 6. Similar to current mode control, this oscillation occurs at the duty cycle greater than 50% and can be alleviated by using a larger inductor value. The current limit threshold is reduced to Foldback Current when the FB pin falls below Foldback Threshold. This feature protects the IC and external components under the power up or over−load conditions.

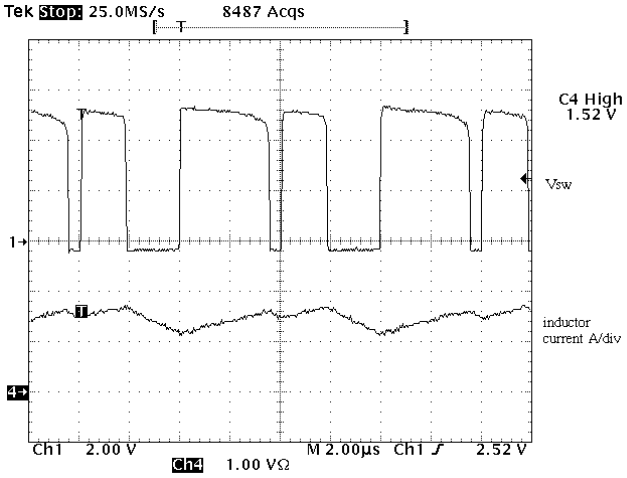

Figure 6. The Regulator in Current Limit

BOOST Pin

The BOOST pin provides base driving current for the power switch. A voltage higher than V_{IN} provides required headroom to turn on the power switch. This in turn reduces IC power dissipation and improves overall system efficiency. The BOOST pin can be connected to an external boost−strapping circuit which typically uses a 0.1 μF capacitor and a 1N914 or 1N4148 diode, as shown in Figure 1. When the power switch is turned on, the voltage on the BOOST pin is equal to

$$V_{BOOST} = V_{IN} + V_O - V_F$$

where:

V_F = diode forward voltage.

The anode of the diode can be connected to any DC voltage as well as the regulated output voltage (Figure 1). However, the maximum voltage on the BOOST pin shall not exceed 40 V.

As shown in Figure 7, the BOOST pin current includes a constant 7.0 mA pre−driver current and base current proportional to switch conducting current. A detailed discussion of this current is conducted in Thermal Consideration section. A 0.1 μF capacitor is usually adequate for maintaining the Boost pin voltage during the on time.

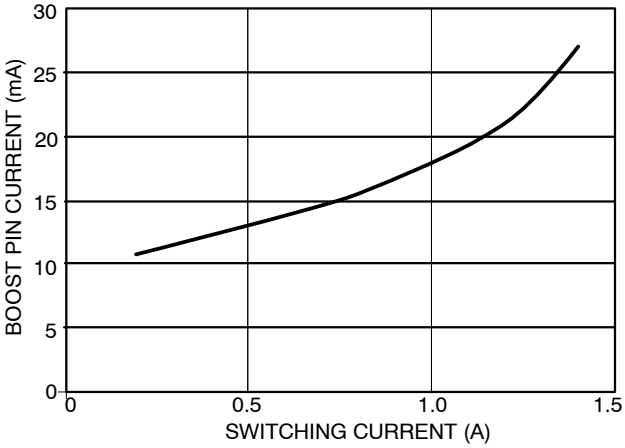

Figure 7. The Boost Pin Current Includes 7.0 mA Pre−Driver Current and Base Current when the Switch is Turned On. The Beta Decline of the Power Switch Further Increases the Base Current at High Switching Current

Shutdown

The internal power switch will not turn on until the V_{IN} pin rises above the Startup Voltage. This ensures no switching until adequate supply voltage is provided to the IC. The IC transitions to sleep mode when the SHDNB pin is pulled low. In sleep mode, the internal power switch transistor remains off and supply current is reduced to the Shutdown Quiescent Current value (20 μA typical). This pin has an internal pull-up current source, so defaults to high (enabled) state when not connected.

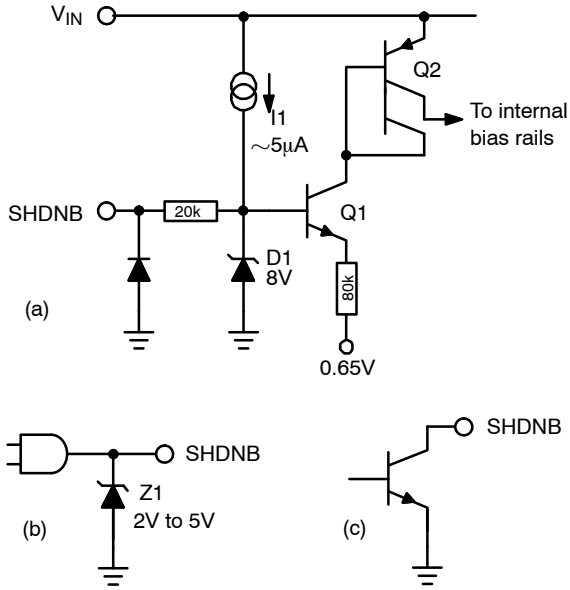

Figure 8. SHDNB pin equivalent internal circuit (a) and practical interface examples (b), (c).

Figure 8(a) depicts the SHDNB pin equivalent internal circuit. If the pin is open, current source I1 flows into the base of Q1, turning both Q1 and Q2 on. In turn, Q2 collector current enables the various internal power rails. In Figure 8(b), a standard logic gate is used to pull the pin low by shunting I1 to ground, which places the IC in sleep (shutdown) mode. Note that, when the gate output is logical high, the voltage at the SHDNB pin will rise to the internal clamp voltage of 8 V. This level exceeds the maximum output rating for most common logic families. Protection Zener diode Z1 permits the pin voltage to rise high enough to enable the IC, but remain less than the gate output voltage rating. In Figure 8(c), a single open-collector general-purpose NPN transistor is used to pull the pin low. Since transistors generally have a maximum collector voltage rating in excess of 8 V, the protection Zener diode in Figure 8(b) is not required.

Startup

During power up, the regulator tends to quickly charge up the output capacitors to reach voltage regulation. This gives rise to an excessive in−rush current which can be detrimental to the inductor, IC and catch diode. In V^2 control , the compensation capacitor provides Soft−Start with no need for extra pin or circuitry. During the power up, the Output Source Current of the error amplifier charges the compensation capacitor which forces V_C pin and thus output voltage ramp up gradually. The Soft−Start duration can be calculated by

$$T_{SS} = \frac{V_C \times C_{COMP}}{I_{SOURCE}}$$

where:

V_C = V_C pin steady−state voltage, which is approximately equal to error amplifier's reference voltage.

C_{COMP} = Compensation capacitor connected to the V_C pin
I_{SOURCE} = Output Source Current of the error amplifier.

Using a 0.1 μF C_{COMP}, the calculation shows a T_{SS} over 5.0 ms which is adequate to avoid any current stresses. Figure 9 shows the gradual rise of the V_C, V_O and envelope of the V_{SW} during power up. There is no voltage over−shoot after the output voltage reaches the regulation. If the supply voltage rises slower than the V_C pin, output voltage may over−shoot.

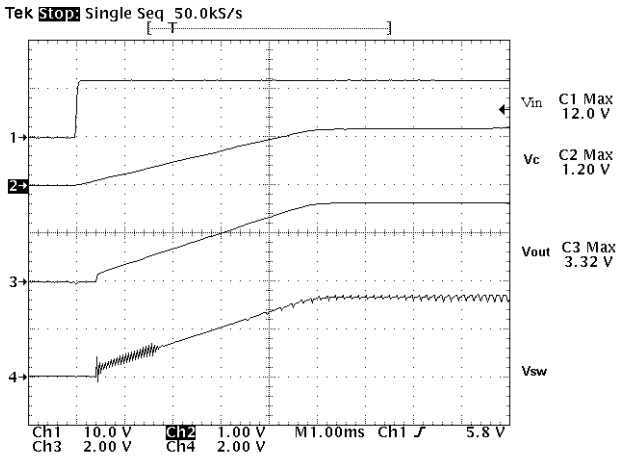

Figure 9. The Power Up Transition of NCV51411 Regulator

Short Circuit

When the V_{FB} pin voltage drops below Foldback Threshold, the regulator reduces the peak current limit by 40% and switching frequency to 1/4 of the nominal frequency. These features are designed to protect the IC and external components during over load or short circuit conditions. In those conditions, peak switching current is clamped to the current limit threshold. The reduced switching frequency significantly increases the ripple current, and thus lowers the DC current. The short circuit can cause the minimum duty cycle to be limited by Minimum Output Pulse Width. The foldback frequency reduces the minimum duty cycle by extending the switching cycle. This protects the IC from overheating, and also limits the power that can be transferred to the output. The current limit foldback effectively reduces the current stress on the inductor and diode. When the output is shorted, the DC current of the inductor and diode can approach the current limit threshold. Therefore, reducing the current limit by 40% can result in an equal percentage drop of the inductor and diode current. The short circuit waveforms are captured in Figure 10, and the benefit of the foldback frequency and current limit is self−evident.

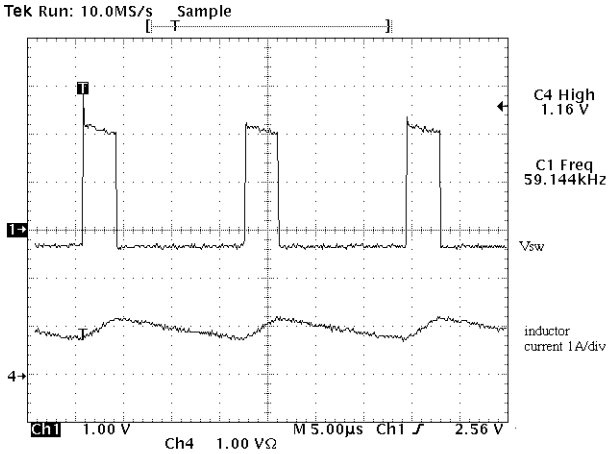

Figure 10. In Short Circuit, the Foldback Current and Foldback Frequency Limit the Switching Current to Protect the IC, Inductor and Catch Diode

Thermal Considerations

A calculation of the power dissipation of the IC is always necessary prior to the adoption of the regulator. The current drawn by the IC includes quiescent current, pre−driver current, and power switch base current. The quiescent current drives the low power circuits in the IC, which include comparators, error amplifier and other logic blocks. Therefore, this current is independent of the switching current and generates power equal to

$$W_Q = V_{IN} \times I_Q$$

where:

I_Q = quiescent current.

The pre−driver current is used to turn on/off the power switch and is approximately equal to 12 mA in worst case. During steady state operation, the IC draws this current from the Boost pin when the power switch is on and then receives it from the V_{IN} pin when the switch is off. The pre−driver current always returns to the V_{SW} pin. Since the pre−driver current goes out to the regulator's output even when the power switch is turned off, a minimum load is required to prevent overvoltage in light load conditions. If the Boost pin voltage is equal to $V_{IN} + V_O$ when the switch is on, the power dissipation due to pre−driver current can be calculated by

$$W_{DRV} = 12\ \text{mA} \times \left(V_{IN} - V_O + \frac{V_O^2}{V_{IN}}\right)$$

The base current of a bipolar transistor is equal to collector current divided by beta of the device. Beta of 60 is used here to estimate the base current. The Boost pin provides the base current when the transistor needs to be on. The power dissipated by the IC due to this current is

$$W_{BASE} = \frac{V_O^2}{V_{IN}} \times \frac{I_S}{60}$$

where:

I_S = DC switching current.

When the power switch turns on, the saturation voltage and conduction current contribute to the power loss of a non−ideal switch. The power loss can be quantified as

$$W_{SAT} = \frac{V_O}{V_{IN}} \times I_S \times V_{SAT}$$

where:

V_{SAT} = saturation voltage of the power switch which is shown in Figure 5.

The switching loss occurs when the switch experiences both high current and voltage during each switch transition. This regulator has a 30 ns turn−off time and associated power loss is equal to

$$W_S = \frac{I_S \times V_{IN}}{2} \times 30\ \text{ns} \times f_S$$

The turn−on time is much shorter and thus turn−on loss is not considered here.

The total power dissipated by the IC is sum of all the above

$$W_{IC} = W_Q + W_{DRV} + W_{BASE} + W_{SAT} + W_S$$

The IC junction temperature can be calculated from the ambient temperature, IC power dissipation and thermal resistance of the package. The equation is shown as follows,

$$T_J = W_{IC} \times R_{\theta JA} + T_A$$

Minimum Load Requirement

As pointed out in the previous section, a minimum load is required for this regulator due to the pre−driver current feeding the output. Placing a resistor equal to V_O divided by 12 mA should prevent any voltage overshoot at light load conditions. Alternatively, the feedback resistors can be valued properly to consume 12 mA current.

COMPONENT SELECTION

Input Capacitor

In a buck converter, the input capacitor witnesses pulsed current with an amplitude equal to the load current. This pulsed current and the ESR of the input capacitors determine the V_{IN} ripple voltage, which is shown in Figure 11. For V_{IN} ripple, low ESR is a critical requirement for the input capacitor selection. The pulsed input current possesses a significant AC component, which is absorbed by the input capacitors. The RMS current of the input capacitor can be calculated using:

$$I_{RMS} = I_O \sqrt{D(1 - D)}$$

where:

D = switching duty cycle which is equal to V_O/V_{IN}.

I_O = load current.

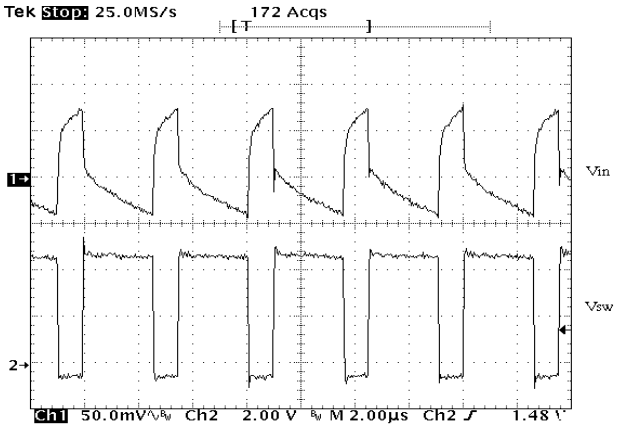

Figure 11. Input Voltage Ripple in a Buck Converter

To calculate the RMS current, multiply the load current with the constant given by Figure 12 at each duty cycle. It is a common practice to select the input capacitor with an RMS current rating more than half the maximum load current. If multiple capacitors are paralleled, the RMS current for each capacitor should be the total current divided by the number of capacitors.

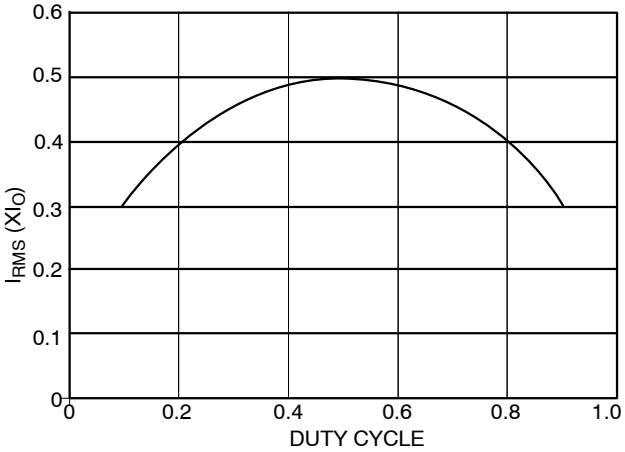

Figure 12. Input Capacitor RMS Current can be Calculated by Multiplying Y Value with Maximum Load Current at any Duty Cycle

Selecting the capacitor type is determined by each design's constraint and emphasis. The aluminum electrolytic capacitors are widely available at lowest cost. Their ESR and ESL (equivalent series inductor) are relatively high. Multiple capacitors are usually paralleled to achieve lower ESR. In addition, electrolytic capacitors usually need to be paralleled with a ceramic capacitor for filtering high frequency noises. The OS−CON are solid aluminum electrolytic capacitors, and therefore has a much lower ESR. Recently, the price of the OS−CON capacitors has dropped significantly so that it is now feasible to use them for some low cost designs. Electrolytic capacitors are

physically large, and not used in applications where the size, and especially height is the major concern.

Ceramic capacitors are now available in values over 10 μF. Since the ceramic capacitor has low ESR and ESL, a single ceramic capacitor can be adequate for both low frequency and high frequency noises. The disadvantage of ceramic capacitors are their high cost. Solid tantalum capacitors can have low ESR and small size. However, the reliability of the tantalum capacitor is always a concern in the application where the capacitor may experience surge current.

Output Capacitor

In a buck converter, the requirements on the output capacitor are not as critical as those on the input capacitor. The current to the output capacitor comes from the inductor and thus is triangular. In most applications, this makes the RMS ripple current not an issue in selecting output capacitors.

The output ripple voltage is the sum of a triangular wave caused by ripple current flowing through ESR, and a square wave due to ESL. Capacitive reactance is assumed to be small compared to ESR and ESL. The peak to peak ripple current of the inductor is:

$$I_{P-P} = \frac{V_O(V_{IN} - V_O)}{(V_{IN})(L)(f_S)}$$

$V_{RIPPLE(ESR)}$, the output ripple due to the ESR, is equal to the product of I_{P-P} and ESR. The voltage developed across the ESL is proportional to the di/dt of the output capacitor. It is realized that the di/dt of the output capacitor is the same as the di/dt of the inductor current. Therefore, when the switch turns on, the di/dt is equal to $(V_{IN} - V_O)/L$, and it becomes V_O/L when the switch turns off. The total ripple voltage induced by ESL can then be derived from

$$V_{RIPPLE(ESL)} = ESL\left(\frac{V_{IN}}{L}\right) + ESL\left(\frac{V_{IN} - V_O}{L}\right) = ESL\left(\frac{V_{IN}}{L}\right)$$

The total output ripple is the sum of the $V_{RIPPLE(ESR)}$ and $V_{RIPPLE(ESR)}$.

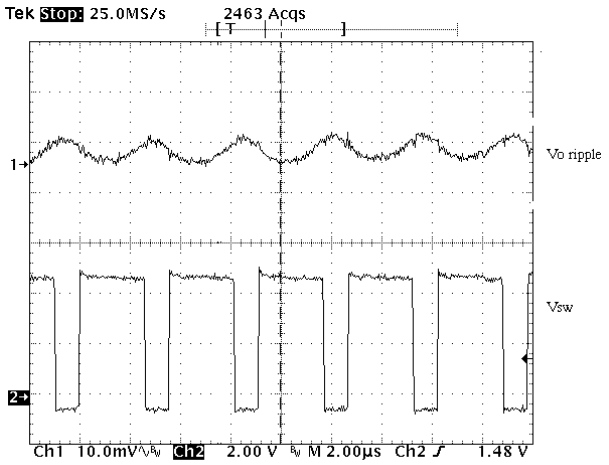

Figure 13. The Output Voltage Ripple Using Two 10 μF Ceramic Capacitors in Parallel

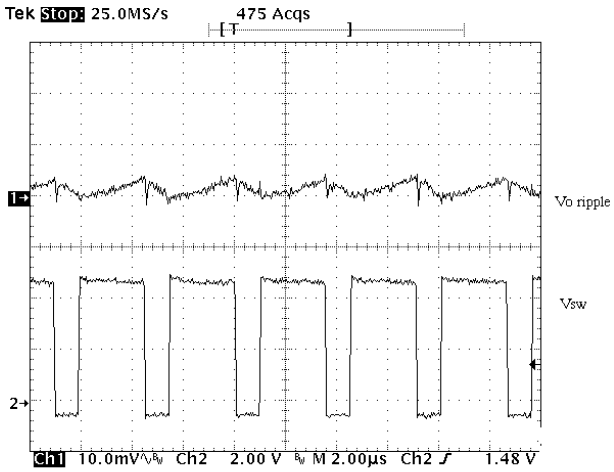

Figure 14. The Output Voltage Ripple Using One 100 μF POSCAP Capacitor

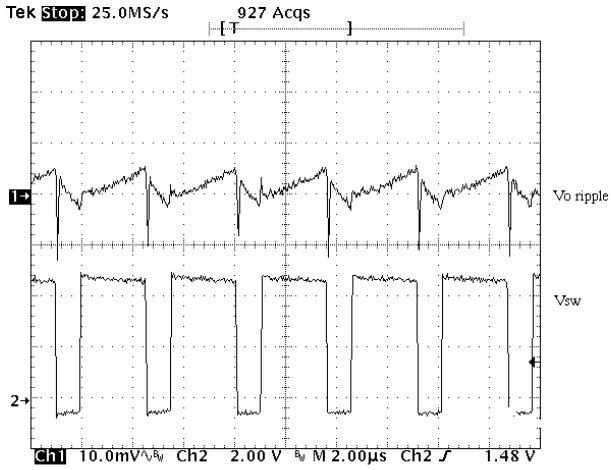

Figure 15. The Output Voltage Ripple Using One 100 μF OS−CON

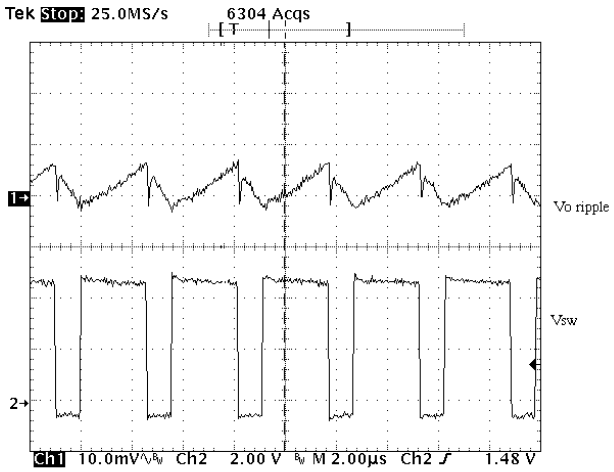

Figure 16. The Output Voltage Ripple Using One 100 μF Tantalum Capacitor

Figure 13 to Figure 16 show the output ripple of a 5.0 V to 3.3 V/500 mA regulator using 22 μH inductor and various capacitor types. At the switching frequency, the low ESR and ESL make the ceramic capacitors behave capacitively as shown in Figure 13. Additional paralleled ceramic capacitors will further reduce the ripple voltage, but inevitably increase the cost. “POSCAP”, manufactured by SANYO, is a solid electrolytic capacitor. The anode is sintered tantalum and the cathode is a highly conductive polymerized organic semiconductor. TPC series, featuring low ESR and low profile, is used in the measurement of Figure 14. It is shown that POSCAP presents a good balance of capacitance and ESR, compared with a ceramic capacitor. In this application, the low ESR generates less than 5.0 mV of ripple and the ESL is almost unnoticeable. The ESL of the through−hole OS−CON capacitor give rise to the inductive impedance. It is evident from Figure 15 which shows the step rise of the output ripple on the switch turn−on and large spike on the switch turn−off. The ESL prevents the output capacitor from quickly charging up the parasitic capacitor of the inductor when the switch node is pulled below ground through the catch diode conduction. This results in the spike associated with the falling edge of the switch node. The D package tantalum capacitor used in Figure 16 has the same footprint as the POSCAP, but doubles the height. The ESR of the tantalum capacitor is apparently higher than the POSCAP. The electrolytic and tantalum capacitors provide a low−cost solution with compromised performance. The reliability of the tantalum capacitor is not a serious concern for output filtering because the output capacitor is usually free of surge current and voltage.

Diode Selection

The diode in the buck converter provides the inductor current path when the power switch turns off. The peak reverse voltage is equal to the maximum input voltage. The peak conducting current is clamped by the current limit of the IC. The average current can be calculated from:

$$I_{D(AVG)} = \frac{I_O(V_{IN} - V_O)}{V_{IN}}$$

The worse case of the diode average current occurs during maximum load current and maximum input voltage. For the diode to survive the short circuit condition, the current rating of the diode should be equal to the Foldback Current Limit. See Table 1 for Schottky diodes from ON Semiconductor which are suggested for use with the NCV51411 regulator.

Inductor Selection

When choosing inductors, one might have to consider maximum load current, core and copper losses, component height, output ripple, EMI, saturation and cost. Lower inductor values are chosen to reduce the physical size of the inductor. Higher value cuts down the ripple current, core losses and allows more output current. For most applications, the inductor value falls in the range between 2.2 μH and 22 μH. The saturation current ratings of the inductor shall not exceed the $I_{L(PK)}$, calculated according to

$$I_{L(PK)} = I_O + \frac{V_O(V_{IN} - V_O)}{2(f_S)(L)(V_{IN})}$$

The DC current through the inductor is equal to the load current. The worse case occurs during maximum load current. Check the vendor’s spec to adjust the inductor value under current loading. Inductors can lose over 50% of inductance when it nears saturation.

The core materials have a significant effect on inductor performance. The ferrite core has benefits of small physical size, and very low power dissipation. But be careful not to operate these inductors too far beyond their maximum ratings for peak current, as this will saturate the core. Powered Iron cores are low cost and have a more gradual saturation curve. The cores with an open magnetic path, such as rod or barrel, tend to generate high magnetic field radiation. However, they are usually cheap and small. The cores providing a close magnetic loop, such as pot−core and toroid, generate low electro−magnetic interference (EMI).

There are many magnetic component vendors providing standard product lines suitable for the NCV51411. Table 2 lists three vendors, their products and contact information.

Table 1.

Part Number	$V_{BREAKDOWN}$ (V)	$I_{AVERAGE}$ (A)	$V_{(F)}$ (V) @ $I_{AVERAGE}$	Package
1N5817	20	1.0	0.45	Axial Lead
1N5818	30	1.0	0.55	Axial Lead
1N5819	40	1.0	0.6	Axial Lead
MBR0520	20	0.5	0.385	SOD−123
MBR0530	30	0.5	0.43	SOD−123
MBR0540	40	0.5	0.53	SOD−123
MBRS120	20	1.0	0.55	SMB
MBRS130	30	1.0	0.395	SMB
MBRS140	40	1.0	0.6	SMB

Table 2.

Vendor	Product Family	Web Site	Telephone
Coiltronics	UNI−Pac1/2: SMT, barrel THIN−PAC: SMT, toroid, low profile CTX: Leaded, toroid	www.coiltronics.com	(516) 241−7876
Coilcraft	DO1608: SMT, barrel DS/DT 1608: SMT, barrel, magnetically shielded DO3316: SMT, barrel DS/DT 3316: SMT, barrel, magnetically shielded DO3308: SMT, barrel, low profile	www.coilcraft.com	(800) 322−2645
Pulse	–	www.pulseeng.com	(619) 674−8100

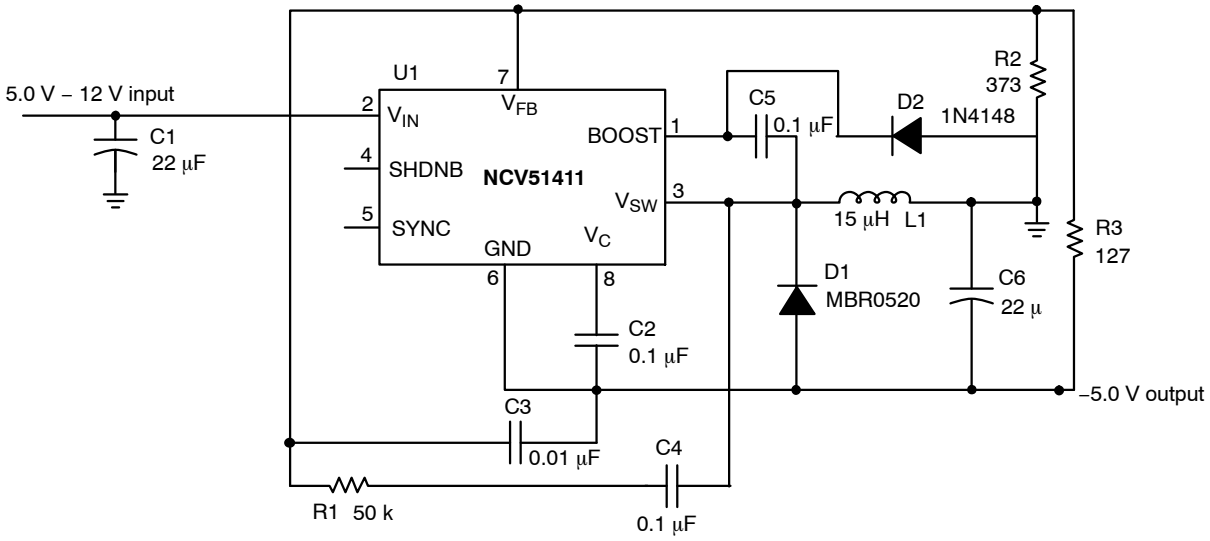

Figure 17. Additional Application Diagram, 5.0 V − 12 V to −5.0 V/400 mA Inverting Converter

ORDERING INFORMATION

Device	Package	Shipping†
NCV51411DR2G	SO−8 (Pb−Free)	2500 Units / Tape & Reel
NCV51411PWR2G	SO−16WEP (Pb−Free)	1000 Units / Tape & Reel
NCV51411MNR2G	DFN18 (Pb−Free)	2500 Units / Tape & Reel

†For information on tape and reel specifications, including part orientation and tape sizes, please refer to our Tape and Reel Packaging Specifications Brochure, BRD8011/D.

V^2 is a trademark of Switch Power, Inc.

DFN18 6x5, 0.5P
CASE 505
ISSUE D

DATE 17 NOV 2006

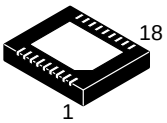

SCALE 2:1

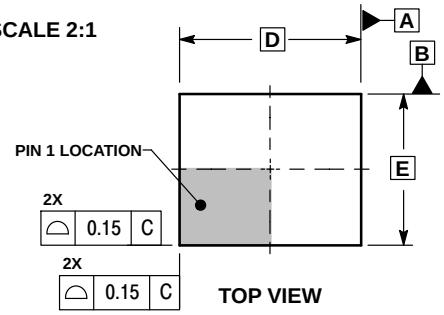

TOP VIEW

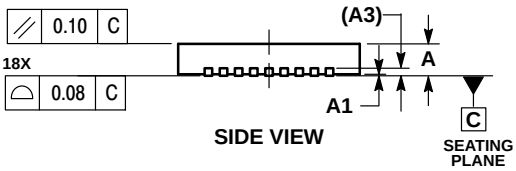

SIDE VIEW

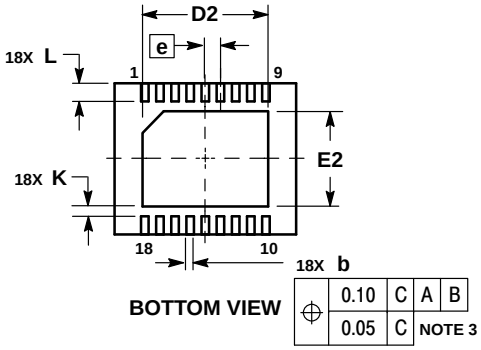

BOTTOM VIEW

NOTES:
1. DIMENSIONS AND TOLERANCING PER ASME Y14.5M, 1994.
2. DIMENSIONS IN MILLIMETERS.
3. DIMENSION b APPLIES TO PLATED TERMINAL AND IS MEASURED BETWEEN 0.25 AND 0.30 MM FROM TERMINAL
4. COPLANARITY APPLIES TO THE EXPOSED PAD AS WELL AS THE TERMINALS.

	MILLIMETERS	
DIM	MIN	MAX
A	0.80	1.00
A1	0.00	0.05
A3	0.20 REF	
b	0.18	0.30
D	6.00 BSC	
D2	3.98	4.28
E	5.00 BSC	
E2	2.98	3.28
e	0.50 BSC	
K	0.20	–––
L	0.45	0.65

GENERIC MARKING DIAGRAM*

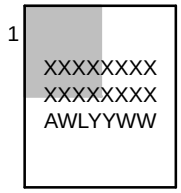

XXXXX = Specific Device Code
A = Assembly Location
WL = Wafer Lot
YY = Year
WW = Work Week
▪ = Pb−Free Package

*This information is generic. Please refer to device data sheet for actual part marking. Pb−Free indicator, “G” or microdot “ ▪”, may or may not be present.

SOLDERING FOOTPRINT

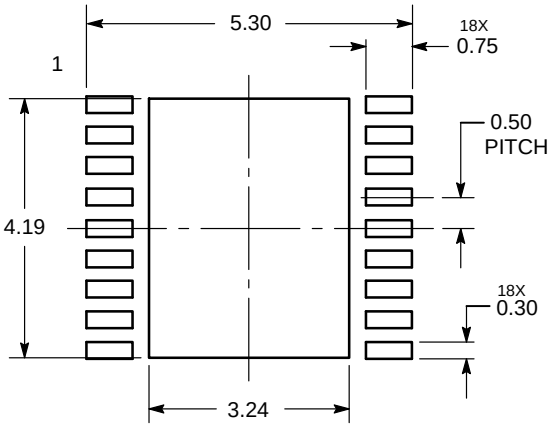

DIMENSIONS: MILLIMETERS

DOCUMENT NUMBER:	98AON11920D	Electronic versions are uncontrolled except when accessed directly from the Document Repository. Printed versions are uncontrolled except when stamped “CONTROLLED COPY” in red.
DESCRIPTION:	18 PIN DFN, 6X5 MM. 0.5 MM PITCH	PAGE 1 OF 1

onsemi and onsemi are trademarks of Semiconductor Components Industries, LLC dba **onsemi** or its subsidiaries in the United States and/or other countries. **onsemi** reserves the right to make changes without further notice to any products herein. **onsemi** makes no warranty, representation or guarantee regarding the suitability of its products for any particular purpose, nor does **onsemi** assume any liability arising out of the application or use of any product or circuit, and specifically disclaims any and all liability, including without limitation special, consequential or incidental damages. **onsemi** does not convey any license under its patent rights nor the rights of others.

SCALE 1:1

SOIC−8 NB
CASE 751−07
ISSUE AK

DATE 16 FEB 2011

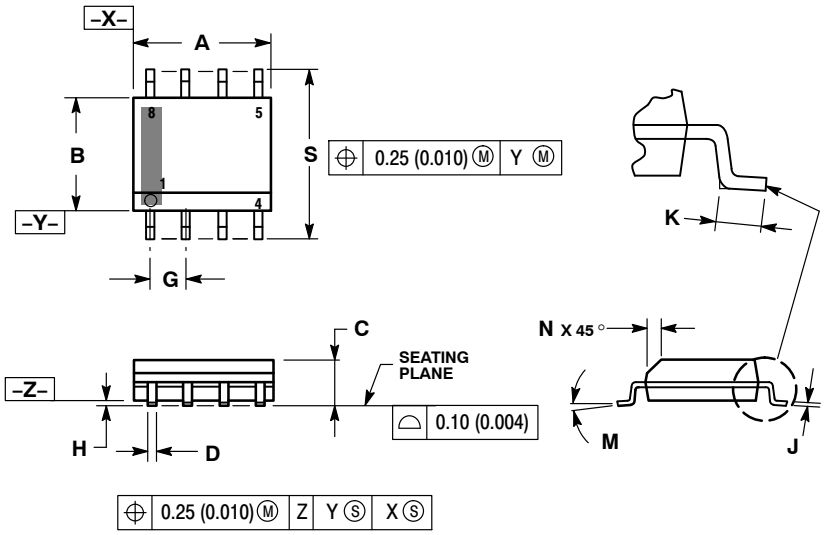

NOTES:
1. DIMENSIONING AND TOLERANCING PER ANSI Y14.5M, 1982.
2. CONTROLLING DIMENSION: MILLIMETER.
3. DIMENSION A AND B DO NOT INCLUDE MOLD PROTRUSION.
4. MAXIMUM MOLD PROTRUSION 0.15 (0.006) PER SIDE.
5. DIMENSION D DOES NOT INCLUDE DAMBAR PROTRUSION. ALLOWABLE DAMBAR PROTRUSION SHALL BE 0.127 (0.005) TOTAL IN EXCESS OF THE D DIMENSION AT MAXIMUM MATERIAL CONDITION.
6. 751−01 THRU 751−06 ARE OBSOLETE. NEW STANDARD IS 751−07.

	MILLIMETERS		INCHES	
DIM	MIN	MAX	MIN	MAX
A	4.80	5.00	0.189	0.197
B	3.80	4.00	0.150	0.157
C	1.35	1.75	0.053	0.069
D	0.33	0.51	0.013	0.020
G	1.27 BSC		0.050 BSC	
H	0.10	0.25	0.004	0.010
J	0.19	0.25	0.007	0.010
K	0.40	1.27	0.016	0.050
M	0 °	8 °	0 °	8 °
N	0.25	0.50	0.010	0.020
S	5.80	6.20	0.228	0.244

SOLDERING FOOTPRINT*

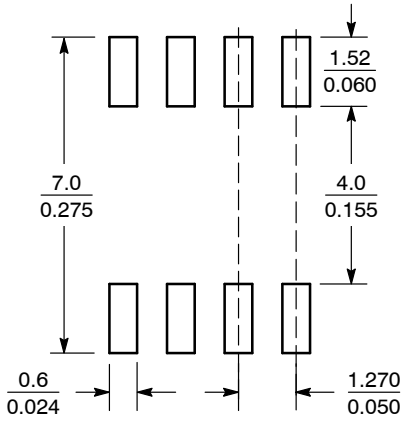

SCALE 6:1 (mm / inches)

*For additional information on our Pb−Free strategy and soldering details, please download the **onsemi** Soldering and Mounting Techniques Reference Manual, SOLDERRM/D.

GENERIC MARKING DIAGRAM*

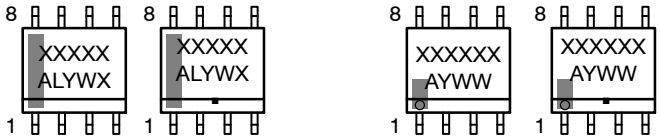

XXXXX = Specific Device Code
A = Assembly Location
L = Wafer Lot
Y = Year
W = Work Week
▪ = Pb−Free Package

XXXXXX = Specific Device Code
A = Assembly Location
Y = Year
WW = Work Week
▪ = Pb−Free Package

*This information is generic. Please refer to device data sheet for actual part marking. Pb−Free indicator, "G" or microdot "▪", may or may not be present. Some products may not follow the Generic Marking.

STYLES ON PAGE 2

DOCUMENT NUMBER:	98ASB42564B	Electronic versions are uncontrolled except when accessed directly from the Document Repository. Printed versions are uncontrolled except when stamped "CONTROLLED COPY" in red.
DESCRIPTION:	SOIC−8 NB	PAGE 1 OF 2

onsemi and onsemi are trademarks of Semiconductor Components Industries, LLC dba **onsemi** or its subsidiaries in the United States and/or other countries. **onsemi** reserves the right to make changes without further notice to any products herein. **onsemi** makes no warranty, representation or guarantee regarding the suitability of its products for any particular purpose, nor does **onsemi** assume any liability arising out of the application or use of any product or circuit, and specifically disclaims any and all liability, including without limitation special, consequential or incidental damages. **onsemi** does not convey any license under its patent rights nor the rights of others.

SOIC−8 NB
CASE 751−07
ISSUE AK

DATE 16 FEB 2011

STYLE 1:
PIN 1. EMITTER
2. COLLECTOR
3. COLLECTOR
4. EMITTER
5. EMITTER
6. BASE
7. BASE
8. EMITTER

STYLE 2:
PIN 1. COLLECTOR, DIE, #1
2. COLLECTOR, #1
3. COLLECTOR, #2
4. COLLECTOR, #2
5. BASE, #2
6. EMITTER, #2
7. BASE, #1
8. EMITTER, #1

STYLE 3:
PIN 1. DRAIN, DIE #1
2. DRAIN, #1
3. DRAIN, #2
4. DRAIN, #2
5. GATE, #2
6. SOURCE, #2
7. GATE, #1
8. SOURCE, #1

STYLE 4:
PIN 1. ANODE
2. ANODE
3. ANODE
4. ANODE
5. ANODE
6. ANODE
7. ANODE
8. COMMON CATHODE

STYLE 5:
PIN 1. DRAIN
2. DRAIN
3. DRAIN
4. DRAIN
5. GATE
6. GATE
7. SOURCE
8. SOURCE

STYLE 6:
PIN 1. SOURCE
2. DRAIN
3. DRAIN
4. SOURCE
5. SOURCE
6. GATE
7. GATE
8. SOURCE

STYLE 7:
PIN 1. INPUT
2. EXTERNAL BYPASS
3. THIRD STAGE SOURCE
4. GROUND
5. DRAIN
6. GATE 3
7. SECOND STAGE Vd
8. FIRST STAGE Vd

STYLE 8:
PIN 1. COLLECTOR, DIE #1
2. BASE, #1
3. BASE, #2
4. COLLECTOR, #2
5. COLLECTOR, #2
6. EMITTER, #2
7. EMITTER, #1
8. COLLECTOR, #1

STYLE 9:
PIN 1. EMITTER, COMMON
2. COLLECTOR, DIE #1
3. COLLECTOR, DIE #2
4. EMITTER, COMMON
5. EMITTER, COMMON
6. BASE, DIE #2
7. BASE, DIE #1
8. EMITTER, COMMON

STYLE 10:
PIN 1. GROUND
2. BIAS 1
3. OUTPUT
4. GROUND
5. GROUND
6. BIAS 2
7. INPUT
8. GROUND

STYLE 11:
PIN 1. SOURCE 1
2. GATE 1
3. SOURCE 2
4. GATE 2
5. DRAIN 2
6. DRAIN 2
7. DRAIN 1
8. DRAIN 1

STYLE 12:
PIN 1. SOURCE
2. SOURCE
3. SOURCE
4. GATE
5. DRAIN
6. DRAIN
7. DRAIN
8. DRAIN

STYLE 13:
PIN 1. N.C.
2. SOURCE
3. SOURCE
4. GATE
5. DRAIN
6. DRAIN
7. DRAIN
8. DRAIN

STYLE 14:
PIN 1. N−SOURCE
2. N−GATE
3. P−SOURCE
4. P−GATE
5. P−DRAIN
6. P−DRAIN
7. N−DRAIN
8. N−DRAIN

STYLE 15:
PIN 1. ANODE 1
2. ANODE 1
3. ANODE 1
4. ANODE 1
5. CATHODE, COMMON
6. CATHODE, COMMON
7. CATHODE, COMMON
8. CATHODE, COMMON

STYLE 16:
PIN 1. EMITTER, DIE #1
2. BASE, DIE #1
3. EMITTER, DIE #2
4. BASE, DIE #2
5. COLLECTOR, DIE #2
6. COLLECTOR, DIE #2
7. COLLECTOR, DIE #1
8. COLLECTOR, DIE #1

STYLE 17:
PIN 1. VCC
2. V2OUT
3. V1OUT
4. TXE
5. RXE
6. VEE
7. GND
8. ACC

STYLE 18:
PIN 1. ANODE
2. ANODE
3. SOURCE
4. GATE
5. DRAIN
6. DRAIN
7. CATHODE
8. CATHODE

STYLE 19:
PIN 1. SOURCE 1
2. GATE 1
3. SOURCE 2
4. GATE 2
5. DRAIN 2
6. MIRROR 2
7. DRAIN 1
8. MIRROR 1

STYLE 20:
PIN 1. SOURCE (N)
2. GATE (N)
3. SOURCE (P)
4. GATE (P)
5. DRAIN
6. DRAIN
7. DRAIN
8. DRAIN

STYLE 21:
PIN 1. CATHODE 1
2. CATHODE 2
3. CATHODE 3
4. CATHODE 4
5. CATHODE 5
6. COMMON ANODE
7. COMMON ANODE
8. CATHODE 6

STYLE 22:
PIN 1. I/O LINE 1
2. COMMON CATHODE/VCC
3. COMMON CATHODE/VCC
4. I/O LINE 3
5. COMMON ANODE/GND
6. I/O LINE 4
7. I/O LINE 5
8. COMMON ANODE/GND

STYLE 23:
PIN 1. LINE 1 IN
2. COMMON ANODE/GND
3. COMMON ANODE/GND
4. LINE 2 IN
5. LINE 2 OUT
6. COMMON ANODE/GND
7. COMMON ANODE/GND
8. LINE 1 OUT

STYLE 24:
PIN 1. BASE
2. EMITTER
3. COLLECTOR/ANODE
4. COLLECTOR/ANODE
5. CATHODE
6. CATHODE
7. COLLECTOR/ANODE
8. COLLECTOR/ANODE

STYLE 25:
PIN 1. VIN
2. N/C
3. REXT
4. GND
5. IOUT
6. IOUT
7. IOUT
8. IOUT

STYLE 26:
PIN 1. GND
2. dv/dt
3. ENABLE
4. ILIMIT
5. SOURCE
6. SOURCE
7. SOURCE
8. VCC

STYLE 27:
PIN 1. ILIMIT
2. OVLO
3. UVLO
4. INPUT+
5. SOURCE
6. SOURCE
7. SOURCE
8. DRAIN

STYLE 28:
PIN 1. SW_TO_GND
2. DASIC_OFF
3. DASIC_SW_DET
4. GND
5. V_MON
6. VBULK
7. VBULK
8. VIN

STYLE 29:
PIN 1. BASE, DIE #1
2. EMITTER, #1
3. BASE, #2
4. EMITTER, #2
5. COLLECTOR, #2
6. COLLECTOR, #2
7. COLLECTOR, #1
8. COLLECTOR, #1

STYLE 30:
PIN 1. DRAIN 1
2. DRAIN 1
3. GATE 2
4. SOURCE 2
5. SOURCE 1/DRAIN 2
6. SOURCE 1/DRAIN 2
7. SOURCE 1/DRAIN 2
8. GATE 1

DOCUMENT NUMBER:	98ASB42564B	Electronic versions are uncontrolled except when accessed directly from the Document Repository. Printed versions are uncontrolled except when stamped "CONTROLLED COPY" in red.
DESCRIPTION:	SOIC−8 NB	PAGE 2 OF 2

onsemi and onsemi are trademarks of Semiconductor Components Industries, LLC dba **onsemi** or its subsidiaries in the United States and/or other countries. **onsemi** reserves the right to make changes without further notice to any products herein. **onsemi** makes no warranty, representation or guarantee regarding the suitability of its products for any particular purpose, nor does **onsemi** assume any liability arising out of the application or use of any product or circuit, and specifically disclaims any and all liability, including without limitation special, consequential or incidental damages. **onsemi** does not convey any license under its patent rights nor the rights of others.

SOIC 16 LEAD WIDE BODY, EXPOSED PAD

CASE 751AG
ISSUE B

DATE 31 MAY 2016

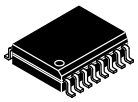

SCALE 1:1

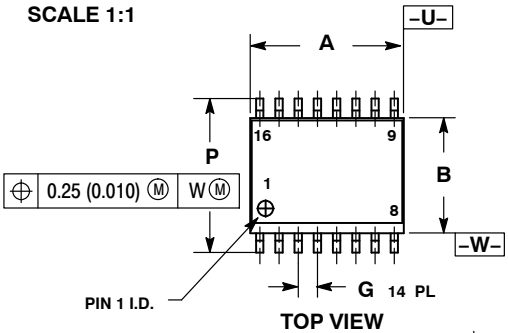

TOP VIEW

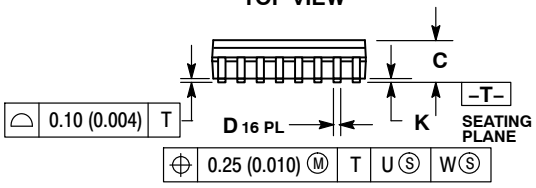

SIDE VIEW

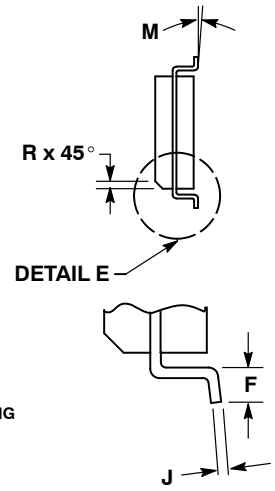

DETAIL E

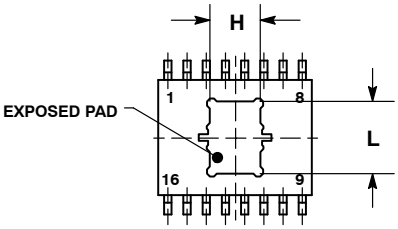

BOTTOM VIEW

SOLDERING FOOTPRINT*

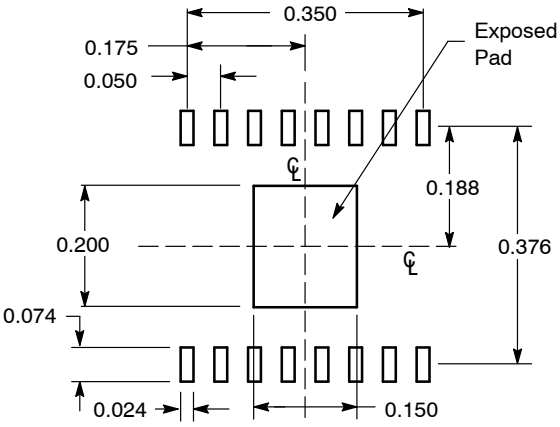

DIMENSIONS: INCHES

*For additional information on our Pb–Free strategy and soldering details, please download the **onsemi** Soldering and Mounting Techniques Reference Manual, SOLDERRM/D.

NOTES:
1. DIMENSIONING AND TOLERANCING PER ANSI Y14.5M, 1982.
2. CONTROLLING DIMENSION: MILLIMETER.
3. DIMENSION A AND B DO NOT INCLUDE MOLD PROTRUSION.
4. MAXIMUM MOLD PROTRUSION 0.15 (0.006) PER SIDE.
5. DIMENSION D DOES NOT INCLUDE DAMBAR PROTRUSION. ALLOWABLE PROTRUSION SHALL BE 0.13 (0.005) TOTAL IN EXCESS OF THE D DIMENSION AT MAXIMUM MATERIAL CONDITION.
6. 751R–01 OBSOLETE, NEW STANDARD 751R–02.

	MILLIMETERS		INCHES	
DIM	MIN	MAX	MIN	MAX
A	10.15	10.45	0.400	0.411
B	7.40	7.60	0.292	0.299
C	2.35	2.65	0.093	0.104
D	0.35	0.49	0.014	0.019
F	0.50	0.90	0.020	0.035
G	1.27 BSC		0.050 BSC	
H	3.45	3.66	0.136	0.144
J	0.25	0.32	0.010	0.012
K	0.00	0.10	0.000	0.004
L	4.72	4.93	0.186	0.194
M	0 °	7 °	0 °	7 °
P	10.05	10.55	0.395	0.415
R	0.25	0.75	0.010	0.029

GENERIC MARKING DIAGRAM*

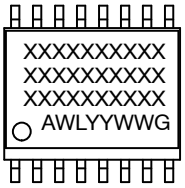

XXXXX = Specific Device Code
A = Assembly Location
WL = Wafer Lot
YY = Year
WW = Work Week
G = Pb–Free Package

*This information is generic. Please refer to device data sheet for actual part marking. Pb–Free indicator, “G” or microdot “ ▪”, may or may not be present.

DOCUMENT NUMBER:	98AON21237D	Electronic versions are uncontrolled except when accessed directly from the Document Repository. Printed versions are uncontrolled except when stamped “CONTROLLED COPY” in red.
DESCRIPTION:	SOIC–16, WB EXPOSED PAD	PAGE 1 OF 1

onsemi and onsemi are trademarks of Semiconductor Components Industries, LLC dba **onsemi** or its subsidiaries in the United States and/or other countries. **onsemi** reserves the right to make changes without further notice to any products herein. **onsemi** makes no warranty, representation or guarantee regarding the suitability of its products for any particular purpose, nor does **onsemi** assume any liability arising out of the application or use of any product or circuit, and specifically disclaims any and all liability, including without limitation special, consequential or incidental damages. **onsemi** does not convey any license under its patent rights nor the rights of others.

onsemi, onsemi, and other names, marks, and brands are registered and/or common law trademarks of Semiconductor Components Industries, LLC dba "**onsemi**" or its affiliates and/or subsidiaries in the United States and/or other countries. **onsemi** owns the rights to a number of patents, trademarks, copyrights, trade secrets, and other intellectual property. A listing of **onsemi**'s product/patent coverage may be accessed at www.onsemi.com/site/pdf/Patent−Marking.pdf. **onsemi** reserves the right to make changes at any time to any products or information herein, without notice. The information herein is provided "as−is" and **onsemi** makes no warranty, representation or guarantee regarding the accuracy of the information, product features, availability, functionality, or suitability of its products for any particular purpose, nor does **onsemi** assume any liability arising out of the application or use of any product or circuit, and specifically disclaims any and all liability, including without limitation special, consequential or incidental damages. Buyer is responsible for its products and applications using **onsemi** products, including compliance with all laws, regulations and safety requirements or standards, regardless of any support or applications information provided by **onsemi**. "Typical" parameters which may be provided in **onsemi** data sheets and/or specifications can and do vary in different applications and actual performance may vary over time. All operating parameters, including "Typicals" must be validated for each customer application by customer's technical experts. **onsemi** does not convey any license under any of its intellectual property rights nor the rights of others. **onsemi** products are not designed, intended, or authorized for use as a critical component in life support systems or any FDA Class 3 medical devices or medical devices with a same or similar classification in a foreign jurisdiction or any devices intended for implantation in the human body. Should Buyer purchase or use **onsemi** products for any such unintended or unauthorized application, Buyer shall indemnify and hold **onsemi** and its officers, employees, subsidiaries, affiliates, and distributors harmless against all claims, costs, damages, and expenses, and reasonable attorney fees arising out of, directly or indirectly, any claim of personal injury or death associated with such unintended or unauthorized use, even if such claim alleges that **onsemi** was negligent regarding the design or manufacture of the part. **onsemi** is an Equal Opportunity/Affirmative Action Employer. This literature is subject to all applicable copyright laws and is not for resale in any manner.

ADDITIONAL INFORMATION

TECHNICAL PUBLICATIONS:
Technical Library: www.onsemi.com/design/resources/technical−documentation
onsemi Website: www.onsemi.com

ONLINE SUPPORT: www.onsemi.com/support
For additional information, please contact your local Sales Representative at
www.onsemi.com/support/sales