Dual Buffer

NL27WZ16

The NL27WZ16 is a high performance dual buffer operating from a 1.65 V to 5.5 V Supply.

Features

- Designed for 1.65 V to 5.5 V V_{CC} Operation
- 2.4 ns t_{PD} at V_{CC} = 5 V (Typ)
- Inputs/Outputs Overvoltage Tolerant up to 5.5 V
- I_{OFF} Supports Partial Power Down Protection
- Sink 32 mA at 4.5 V
- Available in SC−88, SC−74 and UDFN6 Packages
- Chip Complexity < 100 FETs
- −Q Suffix for Automotive and Other Applications Requiring Unique Site and Control Change Requirements; AEC−Q100 Qualified and PPAP Capable
- These Devices are Pb−Free, Halogen Free/BFR Free and are RoHS Compliant

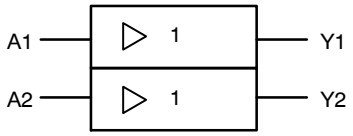

Figure 1. Logic Symbol

MARKING DIAGRAMS

SC−88
DF SUFFIX
CASE 419B−02

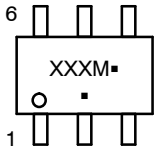

SC−74
CASE 318F−05

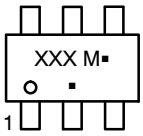

UDFN6
1.2x1.0, 0.4P
CASE 517AA

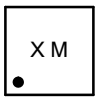

UDFN6
1.45x1.0, 0.5P
CASE 517AQ

UDFN6
1x1, 0.35P
CASE 517BX

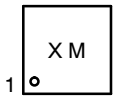

X, XXX = Specific Device Code
M = Date Code*
▪ = Pb−Free Package

(Note: Microdot may be in either location)

*Date Code orientation and/or position may vary depending upon manufacturing location.

ORDERING INFORMATION

See detailed ordering and shipping information in the package dimensions section on page 6 of this data sheet.

© Semiconductor Components Industries, LLC, 2012

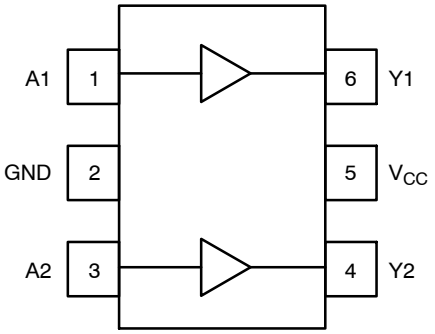

(SC−88 / SC−74)

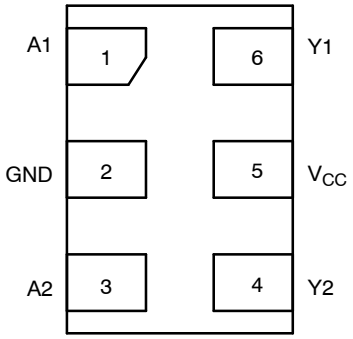

UDFN6

Figure 2. Pinout (Top View)

PIN ASSIGNMENT

Pin	Function
1	A1
2	GND
3	A2
4	Y2
5	V_{CC}
6	Y1

FUNCTION TABLE

A Input	Y Output
L	L
H	H

MAXIMUM RATINGS

Symbol	Characteristics		Value	Units
V_{CC}	DC Supply Voltage		−0.5 to +6.5	V
V_{IN}	DC Input Voltage		−0.5 to +6.5	V
V_{OUT}	DC Output Voltage SC−88, SC−74, UDFN6	Active−Mode (High or Low State) Tri−State Mode (Note 1) Power−Down Mode (V_{CC} = 0 V)	−0.5 to V_{CC} +0.5 −0.5 to +6.5 −0.5 to +6.5	V
I_{IK}	DC Input Diode Current, V_{IN} < GND		−50	mA
I_{OK}	DC Output Diode Current, V_{OUT} < GND		−50	mA
I_{OUT}	DC Output Source/Sink Current		±50	mA
I_{CC} or I_{GND}	DC Supply Current per Supply Pin or Ground Pin		±100	mA
T_{STG}	Storage Temperature Range		−65 to +150	°C
T_L	Lead Temperature, 1 mm from Case for 10 secs		260	°C
T_J	Junction Temperature under Bias		+150	°C
θ_{JA}	Thermal Resistance (Note 2)	SC−88 SC−74 UDFN6	377 320 154	°C/W
P_D	Power Dissipation in Still Air	SC−88 SC−74 UDFN6	332 390 812	mW
MSL	Moisture Sensitivity		Level 1	–
F_R	Flamebility Rating	Oxygen Index: 28 to 34	UL 94−V−0 @ 0.125 in	–
V_{ESD}	ESD Withstand Voltage (Note 3)	Human Body Model Charged Device Model (NLV) Charged Device Model	2000 1000 N/A	V
$I_{LATCHUP}$	Latchup Performance (Note 4)		±100	mA

Stresses exceeding those listed in the Maximum Ratings table may damage the device. If any of these limits are exceeded, device functionality should not be assumed, damage may occur and reliability may be affected.

1. Applicable to devices with outputs that may be tri−stated.
2. Measured with minimum pad spacing on an FR4 board, using 10 mm−by−1 inch, 2 ounce copper trace no air flow per JESD51−7.
3. HBM tested to ANSI/ESDA/JEDEC JS−001−2017. CDM tested to EIA/JESD22−C101−F. JEDEC recommends that ESD qualification to EIA/JESD22−A115−A (Machine Model) be discontinued per JEDEC/JEP172A.
4. Tested to EIA/JESD78 Class II.

RECOMMENDED OPERATING CONDITIONS

Symbol	Parameter		Min	Max	Unit
V_{CC}	Positive DC Supply Voltage		1.65	5.5	V
V_{IN}	DC Input Voltage		0	5.5	V
V_{OUT}	DC Output Voltage	Active−Mode (High or Low State) Tri−State Mode (Note 1) Power−Down Mode (V_{CC} = 0 V)	0 0 0	V_{CC} 5.5 5.5	V
T_A	Operating Temperature Range		−55	+125	°C
t_r , t_f	Input Transition Rise or Fall Rate	V_{CC} = 1.65 V to 1.95 V V_{CC} = 2.3 V to 2.7 V V_{CC} = 3.0 V to 3.6 V V_{CC} = 4.5 V to 5.5 V	0 0 0 0	20 20 10 5	ns/V

Functional operation above the stresses listed in the Recommended Operating Ranges is not implied. Extended exposure to stresses beyond the Recommended Operating Ranges limits may affect device reliability.

DC ELECTRICAL CHARACTERISTICS

Symbol	Parameter	Condition	V_{CC} (V)	T_A = 25°C			−55°C ≤ T_A ≤ 125°C		Units
				Min	Typ	Max	Min	Max	
V_{IH}	High−Level Input Voltage		1.65 to 1.95	0.65 x V_{CC}			0.65 x V_{CC}		V
			2.3 to 5.5	0.70 x V_{CC}			0.70 x V_{CC}		
V_{IL}	Low−Level Input Voltage		1.65 to 1.95			0.35 x V_{CC}		0.35 x V_{CC}	V
			2.3 to 5.5			0.30 x V_{CC}		0.30 x V_{CC}	
V_{OH}	High−Level Output Voltage	V_{IN} = V_{IH} or V_{IL}							V
		I_{OH} = −100 μA	1.65 to 5.5	V_{CC} − 0.1	V_{CC}	–	V_{CC} − 0.1	–	
		I_{OH} = −4 mA	1.65	1.29	1.4	–	1.29	–	
		I_{OH} = −8 mA	2.3	1.9	2.1	–	1.9	–	
		I_{OH} = −12 mA	2.7	2.2	2.4	–	2.2	–	
		I_{OH} = −16 mA	3.0	2.4	2.7	–	2.4	–	
		I_{OH} = −24 mA	3.0	2.3	2.5	–	2.3	–	
		I_{OH} = −32 mA	4.5	3.8	4.0	–	3.8	–	
V_{OL}	Low−Level Output Voltage	V_{IN} = V_{IH} or V_{IL}							V
		I_{OL} = 100 μA	1.65 to 5.5	–	–	0.1	–	0.1	
		I_{OL} = 4 mA	1.65	–	0.08	0.24	–	0.24	
		I_{OL} = 8 mA	2.3	–	0.2	0.3	–	0.3	
		I_{OL} = 12 mA	2.7	–	0.22	0.4	–	0.4	
		I_{OL} = 16 mA	3.0	–	0.28	0.4	–	0.4	
		I_{OL} = 24 mA	3.0	–	0.38	0.55	–	0.55	
		I_{OL} = 32 mA	4.5	–	0.42	0.55	–	0.55	
I_{IN}	Input Leakage Current	V_{IN} = 5.5 V or GND	1.65 to 5.5	–	–	±0.1	–	±1.0	μA
I_{OFF}	Power Off Leakage Current	V_{IN} = 5.5 V or V_{OUT} = 5.5 V	0	–	–	1.0	–	10	μA
I_{CC}	Quiescent Supply Current	V_{IN} = V_{CC} or GND	5.5	–	–	1.0	–	10	μA

Product parametric performance is indicated in the Electrical Characteristics for the listed test conditions, unless otherwise noted. Product performance may not be indicated by the Electrical Characteristics if operated under different conditions.

AC ELECTRICAL CHARACTERISTICS

Symbol	Parameter	Condition	V_{CC} (V)	T_A = 25°C			−40°C ≤ T_A ≤ 85°C		−55°C ≤ T_A ≤ 125°C		Unit
				Min	Typ	Max	Min	Max	Min	Max	
t_{PLH}, t_{PHL}	Propagation Delay, A to Y (Figures 3 and 4)	R_L = 1 MΩ, C_L = 15 pF	1.65 to 1.95	–	8.0	9.6	–	10.2	–	10.2	ns
		R_L = 1 MΩ, C_L = 15 pF	2.3 to 2.7	–	3.0	5.2	–	5.8	–	5.8	
			3.0 to 3.6	–	2.3	3.6	–	4.0	–	4.0	
			4.5 to 5.5	–	1.8	2.9	–	3.2	–	3.2	
		R_L = 500 Ω, C_L = 50 pF	3.0 to 3.6	–	3.0	4.6	–	5.1	–	5.1	
			4.5 to 5.5	–	2.4	3.8	–	4.2	–	4.2	

CAPACITIVE CHARACTERISTICS

Symbol	Parameter	Condition	Typical	Unit
C_{IN}	Input Capacitance	V_{CC} = 5.5 V, V_I = 0 V or V_{CC}	2.5	pF
C_{OUT}	Output Capacitance	V_{CC} = 5.5 V, V_I = 0 V or V_{CC}	4.0	pF
C_{PD}	Power Dissipation Capacitance (Note 5)	10 MHz, V_{CC} = 3.3 V, V_{IN} = 0 V or V_{CC} 10 MHz, V_{CC} = 5.0 V, V_{IN} = 0 V or V_{CC}	11 12.5	pF

5. C_{PD} is defined as the value of the internal equivalent capacitance which is calculated from the operating current consumption without load. Average operating current can be obtained by the equation: $I_{CC(OPR)} = C_{PD} \cdot V_{CC} \cdot f_{in}$) I_{CC}. C_{PD} is used to determine the no−load dynamic power consumption; $P_D = C_{PD} \cdot V_{CC}^2 \cdot f_{in}$) $I_{CC} \cdot V_{CC}$.

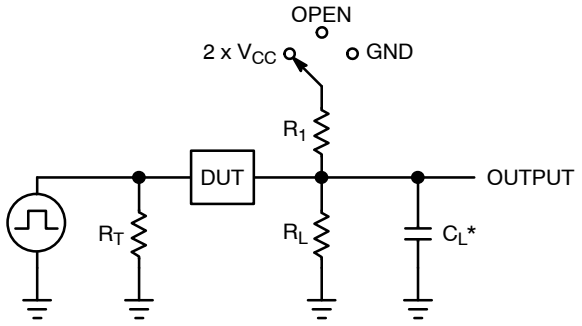

C_L includes probe and jig capacitance
R_T is Z_{OUT} of pulse generator (typically 50 Ω)
f = 1 MHz

Test	Switch Position	C_L, pF	R_L, Ω	R_1, Ω
t_{PLH} / t_{PHL}	Open	See AC Characteristics Table		
t_{PLZ} / t_{PZL}	2 x V_{CC}	50	500	500
t_{PHZ} / t_{PZH}	GND	50	500	500

X = Don't Care

Figure 3. Test Circuit

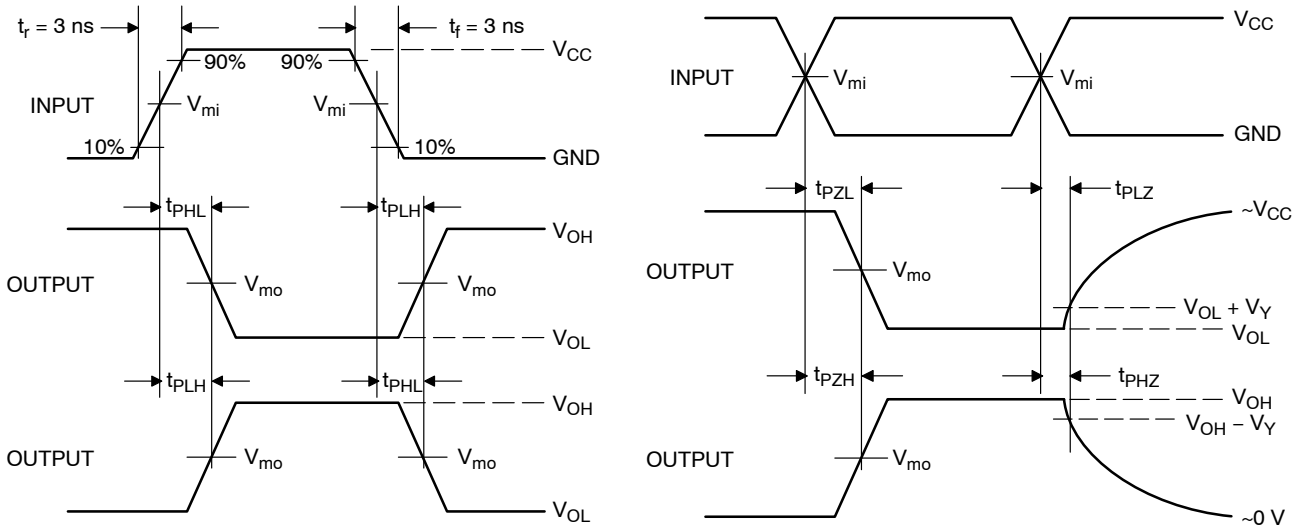

Figure 4. Switching Waveforms

V_{CC}, V	V_{mi}, V	V_{mo}, V		V_Y, V
		t_{PLH}, t_{PHL}	t_{PZL}, t_{PLZ}, t_{PZH}, t_{PHZ}	
1.65 to 1.95	V_{CC}/2	V_{CC}/2	V_{CC} / 2	0.15
2.3 to 2.7	V_{CC}/2	V_{CC}/2	V_{CC} / 2	0.15
3.0 to 3.6	V_{CC}/2	V_{CC}/2	V_{CC} / 2	0.3
4.5 to 5.5	V_{CC}/2	V_{CC}/2	V_{CC} / 2	0.3

ORDERING INFORMATION

Device	Package	Specific Device Code	Pin1 Orientation (See bellow)	Shipping†
NL27WZ16DFT2G	SC−88	MR	Q4	3000 / Tape & Reel
NL27WZ16DFT2G−Q*	SC−88	MR	Q4	3000 / Tape & Reel
NL27WZ16DBVT1G	SC−74	MR	Q4	3000 / Tape & Reel
NL27WZ16MU1TCG	UDFN6, 1.45 x 1.0, 0.5P	F (Rotated 90° CW)	Q4	3000 / Tape & Reel
NL27WZ16MU3TCG	UDFN6, 1.0 x 1.0, 0.35P	T (Rotated 90° CW)	Q4	3000 / Tape & Reel
NL27WZ16MU2TCG	UDFN6, 1.2 x 1.0, 0.4P	5 (Rotated 180° CW)	Q4	3000 / Tape & Reel

†For information on tape and reel specifications, including part orientation and tape sizes, please refer to our Tape and Reel Packaging Specifications Brochure, BRD8011/D.

*−Q Suffix for Automotive and Other Applications Requiring Unique Site and Control Change Requirements; AEC−Q100 Qualified and PPAP Capable.

Pin 1 Orientation in Tape and Reel

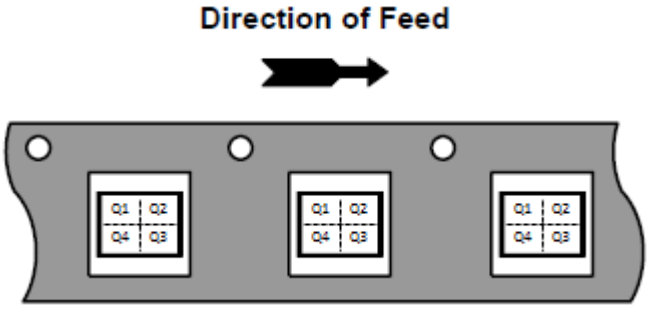

SCALE 2:1

SC−74
CASE 318F
ISSUE P

DATE 07 OCT 2021

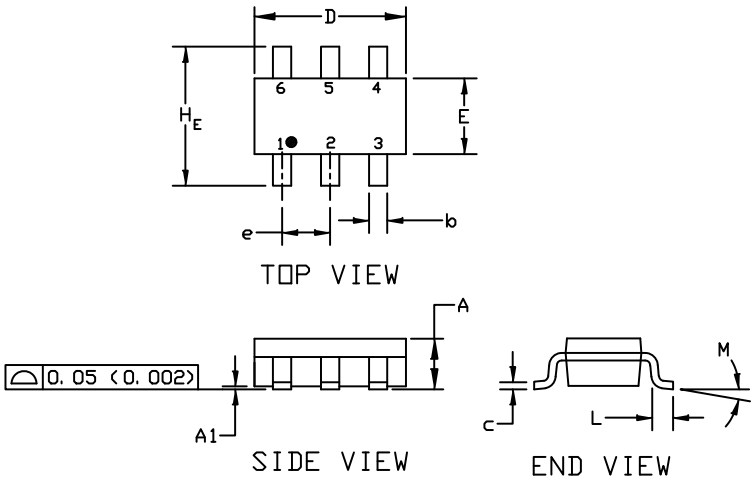

NOTES:
1. DIMENSIONING AND TOLERANCING PER ASME Y14.5M, 1994
2. CONTROLLING DIMENSION: INCHES
3. MAXIMUM LEAD THICKNESS INCLUDES LEAD FINISH THICKNESS. MINIMUM LEAD THICKNESS IS THE MINIMUM THICKNESS OF THE BASE MATERIAL.

	MILLIMETERS			INCHES		
DIM	MIN.	NOM.	MAX.	MIN.	NOM.	MAX.
A	0.90	1.00	1.10	0.035	0.039	0.043
A1	0.01	0.06	0.10	0.001	0.002	0.004
b	0.25	0.37	0.50	0.010	0.015	0.020
c	0.10	0.18	0.26	0.004	0.007	0.010
D	2.90	3.00	3.10	0.114	0.118	0.122
E	1.30	1.50	1.70	0.051	0.059	0.067
e	0.85	0.95	1.05	0.034	0.037	0.041
H_E	2.50	2.75	3.00	0.099	0.108	0.118
L	0.20	0.40	0.60	0.008	0.016	0.024
M	0°	---	10°	0°	---	10°

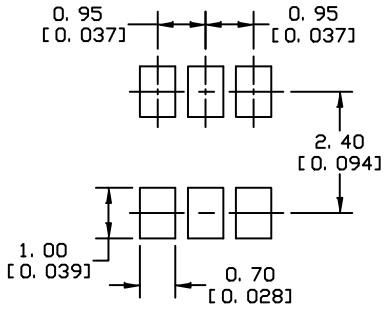

* For additional information on our Pb-Free strategy and soldering details, please download the ON Semiconductor Soldering and Mounting Techniques Reference Manual, SOLDERRM/D.

SOLDERING FOOTPRINT

GENERIC MARKING DIAGRAM*

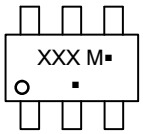

XXX = Specific Device Code
M = Date Code
▪ = Pb−Free Package

(Note: Microdot may be in either location)

*This information is generic. Please refer to device data sheet for actual part marking. Pb−Free indicator, “G” or microdot “▪”, may or may not be present. Some products may not follow the Generic Marking.

STYLE 1:
PIN 1. CATHODE
2. ANODE
3. CATHODE
4. CATHODE
5. ANODE
6. CATHODE

STYLE 2:
PIN 1. NO CONNECTION
2. COLLECTOR
3. EMITTER
4. NO CONNECTION
5. COLLECTOR
6. BASE

STYLE 3:
PIN 1. EMITTER 1
2. BASE 1
3. COLLECTOR 2
4. EMITTER 2
5. BASE 2
6. COLLECTOR 1

STYLE 4:
PIN 1. COLLECTOR 2
2. EMITTER 1/EMITTER 2
3. COLLECTOR 1
4. EMITTER 3
5. BASE 1/BASE 2/COLLECTOR 3
6. BASE 3

STYLE 5:
PIN 1. CHANNEL 1
2. ANODE
3. CHANNEL 2
4. CHANNEL 3
5. CATHODE
6. CHANNEL 4

STYLE 6:
PIN 1. CATHODE
2. ANODE
3. CATHODE
4. CATHODE
5. CATHODE
6. CATHODE

STYLE 7:
PIN 1. SOURCE 1
2. GATE 1
3. DRAIN 2
4. SOURCE 2
5. GATE 2
6. DRAIN 1

STYLE 8:
PIN 1. EMITTER 1
2. BASE 2
3. COLLECTOR 2
4. EMITTER 2
5. BASE 1
6. COLLECTOR 1

STYLE 9:
PIN 1. EMITTER 2
2. BASE 2
3. COLLECTOR 1
4. EMITTER 1
5. BASE 1
6. COLLECTOR 2

STYLE 10:
PIN 1. ANODE/CATHODE
2. BASE
3. EMITTER
4. COLLECTOR
5. ANODE
6. CATHODE

STYLE 11:
PIN 1. EMITTER
2. BASE
3. ANODE/CATHODE
4. ANODE
5. CATHODE
6. COLLECTOR

DOCUMENT NUMBER:	98ASB42973B	Electronic versions are uncontrolled except when accessed directly from the Document Repository. Printed versions are uncontrolled except when stamped “CONTROLLED COPY” in red.	
DESCRIPTION:	SC−74		PAGE 1 OF 1

onsemi and onsemi are trademarks of Semiconductor Components Industries, LLC dba **onsemi** or its subsidiaries in the United States and/or other countries. **onsemi** reserves the right to make changes without further notice to any products herein. **onsemi** makes no warranty, representation or guarantee regarding the suitability of its products for any particular purpose, nor does **onsemi** assume any liability arising out of the application or use of any product or circuit, and specifically disclaims any and all liability, including without limitation special, consequential or incidental damages. **onsemi** does not convey any license under its patent rights nor the rights of others.

SC−88 2.00x1.25x0.90, 0.65P
CASE 419B−02
ISSUE Z

DATE 18 APR 2024

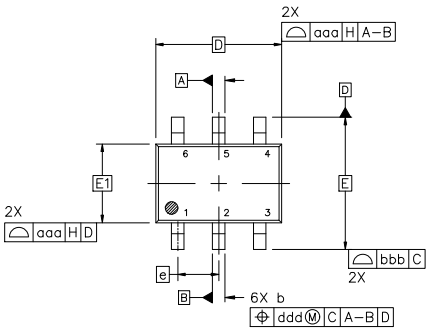

TOP VIEW

NOTES:

1. DIMENSIONING AND TOLERANCING CONFORM TO ASME Y14.5−2018.
2. ALL DIMENSION ARE IN MILLIMETERS.
3. DIMENSIONS D AND E1 DO NOT INCLUDE MOLD FLASH, PROTRUSIONS, OR GATE BURRS. MOLD FLASH, PROTRUSIONS, OR GATE BURRS SHALL NOT EXCEED 0.20 PER END.
4. DIMENSIONS D AND E1 AT THE OUTERMOST EXTREMES OF THE PLASTIC BODY AND DATUM H.
5. DATUMS A AND B ARE DETERMINED AT DATUM H.
6. DIMENSIONS b AND c APPLY TO THE FLAT SECTION OF THE LEAD BETWEEN 0.08 AND 0.15 FROM THE TIP.
7. DIMENSION b DOES NOT INCLUDE DAMBAR PROTRUSION. ALLOWABLE DAMBAR PROTRUSION SHALL BE 0.08 TOTAL IN EXCESS OF DIMENSION b AT MAXIMUM MATERIAL CONDITION. THE DAMBAR CANNOT BE LOCATED ON THE LOWER RADIUS OF THE FOOT.

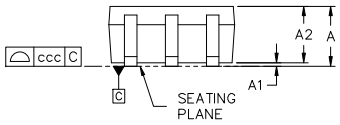

SIDE VIEW

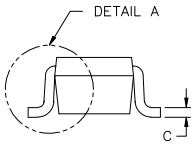

END VIEW

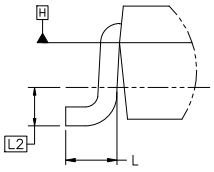

DETAIL A
SCALE 2:1

DIM	MILLIMETERS		
	MIN.	NOM.	MAX.
A	−−−	−−−	1.10
A1	0.00	−−−	0.10
A2	0.70	0.90	1.00
b	0.15	0.20	0.25
c	0.08	0.15	0.22
D	2.00 BSC		
E	2.10 BSC		
E1	1.25 BSC		
e	0.65 BSC		
L	0.26	0.36	0.46
L2	0.15 BSC		
aaa	0.15		
bbb	0.30		
ccc	0.10		
ddd	0.10		

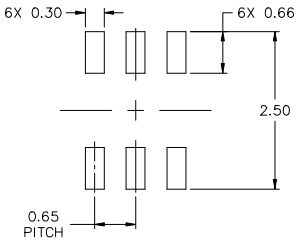

RECOMMENDED MOUNTING FOOTPRINT*

* FOR ADDITIONAL INFORMATION ON OUR Pb−FREE STRATEGY AND SOLDERING DETAILS, PLEASE DOWNLOAD THE ONSEMI SOLDERING AND MOUNTING TECHNIQUES REFERENCE MANUAL, SOLDERRM/D.

GENERIC MARKING DIAGRAM*

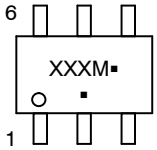

XXX = Specific Device Code
M = Date Code*
▪ = Pb−Free Package

(Note: Microdot may be in either location)

*Date Code orientation and/or position may vary depending upon manufacturing location.

*This information is generic. Please refer to device data sheet for actual part marking. Pb−Free indicator, “G” or microdot “▪”, may or may not be present. Some products may not follow the Generic Marking.

STYLES ON PAGE 2

DOCUMENT NUMBER:	98ASB42985B	Electronic versions are uncontrolled except when accessed directly from the Document Repository. Printed versions are uncontrolled except when stamped “CONTROLLED COPY” in red.
DESCRIPTION:	SC−88 2.00x1.25x0.90, 0.65P	PAGE 1 OF 2

onsemi and onsemi are trademarks of Semiconductor Components Industries, LLC dba **onsemi** or its subsidiaries in the United States and/or other countries. **onsemi** reserves the right to make changes without further notice to any products herein. **onsemi** makes no warranty, representation or guarantee regarding the suitability of its products for any particular purpose, nor does **onsemi** assume any liability arising out of the application or use of any product or circuit, and specifically disclaims any and all liability, including without limitation special, consequential or incidental damages. **onsemi** does not convey any license under its patent rights nor the rights of others.

SC−88 2.00x1.25x0.90, 0.65P
CASE 419B−02
ISSUE Z

DATE 18 APR 2024

STYLE 1:
PIN 1. EMITTER 2
2. BASE 2
3. COLLECTOR 1
4. EMITTER 1
5. BASE 1
6. COLLECTOR 2

STYLE 2:
CANCELLED

STYLE 3:
CANCELLED

STYLE 4:
PIN 1. CATHODE
2. CATHODE
3. COLLECTOR
4. EMITTER
5. BASE
6. ANODE

STYLE 5:
PIN 1. ANODE
2. ANODE
3. COLLECTOR
4. EMITTER
5. BASE
6. CATHODE

STYLE 6:
PIN 1. ANODE 2
2. N/C
3. CATHODE 1
4. ANODE 1
5. N/C
6. CATHODE 2

STYLE 7:
PIN 1. SOURCE 2
2. DRAIN 2
3. GATE 1
4. SOURCE 1
5. DRAIN 1
6. GATE 2

STYLE 8:
CANCELLED

STYLE 9:
PIN 1. EMITTER 2
2. EMITTER 1
3. COLLECTOR 1
4. BASE 1
5. BASE 2
6. COLLECTOR 2

STYLE 10:
PIN 1. SOURCE 2
2. SOURCE 1
3. GATE 1
4. DRAIN 1
5. DRAIN 2
6. GATE 2

STYLE 11:
PIN 1. CATHODE 2
2. CATHODE 2
3. ANODE 1
4. CATHODE 1
5. CATHODE 1
6. ANODE 2

STYLE 12:
PIN 1. ANODE 2
2. ANODE 2
3. CATHODE 1
4. ANODE 1
5. ANODE 1
6. CATHODE 2

STYLE 13:
PIN 1. ANODE
2. N/C
3. COLLECTOR
4. EMITTER
5. BASE
6. CATHODE

STYLE 14:
PIN 1. VREF
2. GND
3. GND
4. IOUT
5. VEN
6. VCC

STYLE 15:
PIN 1. ANODE 1
2. ANODE 2
3. ANODE 3
4. CATHODE 3
5. CATHODE 2
6. CATHODE 1

STYLE 16:
PIN 1. BASE 1
2. EMITTER 2
3. COLLECTOR 2
4. BASE 2
5. EMITTER 1
6. COLLECTOR 1

STYLE 17:
PIN 1. BASE 1
2. EMITTER 1
3. COLLECTOR 2
4. BASE 2
5. EMITTER 2
6. COLLECTOR 1

STYLE 18:
PIN 1. VIN1
2. VCC
3. VOUT2
4. VIN2
5. GND
6. VOUT1

STYLE 19:
PIN 1. I OUT
2. GND
3. GND
4. V CC
5. V EN
6. V REF

STYLE 20:
PIN 1. COLLECTOR
2. COLLECTOR
3. BASE
4. EMITTER
5. COLLECTOR
6. COLLECTOR

STYLE 21:
PIN 1. ANODE 1
2. N/C
3. ANODE 2
4. CATHODE 2
5. N/C
6. CATHODE 1

STYLE 22:
PIN 1. D1 (i)
2. GND
3. D2 (i)
4. D2 (c)
5. VBUS
6. D1 (c)

STYLE 23:
PIN 1. Vn
2. CH1
3. Vp
4. N/C
5. CH2
6. N/C

STYLE 24:
PIN 1. CATHODE
2. ANODE
3. CATHODE
4. CATHODE
5. CATHODE
6. CATHODE

STYLE 25:
PIN 1. BASE 1
2. CATHODE
3. COLLECTOR 2
4. BASE 2
5. EMITTER
6. COLLECTOR 1

STYLE 26:
PIN 1. SOURCE 1
2. GATE 1
3. DRAIN 2
4. SOURCE 2
5. GATE 2
6. DRAIN 1

STYLE 27:
PIN 1. BASE 2
2. BASE 1
3. COLLECTOR 1
4. EMITTER 1
5. EMITTER 2
6. COLLECTOR 2

STYLE 28:
PIN 1. DRAIN
2. DRAIN
3. GATE
4. SOURCE
5. DRAIN
6. DRAIN

STYLE 29:
PIN 1. ANODE
2. ANODE
3. COLLECTOR
4. EMITTER
5. BASE/ANODE
6. CATHODE

STYLE 30:
PIN 1. SOURCE 1
2. DRAIN 2
3. DRAIN 2
4. SOURCE 2
5. GATE 1
6. DRAIN 1

Note: Please refer to datasheet for style callout. If style type is not called out in the datasheet refer to the device datasheet pinout or pin assignment.

DOCUMENT NUMBER:	**98ASB42985B**	Electronic versions are uncontrolled except when accessed directly from the Document Repository. Printed versions are uncontrolled except when stamped "CONTROLLED COPY" in red.
DESCRIPTION:	**SC−88 2.00x1.25x0.90, 0.65P**	**PAGE 2 OF 2**

onsemi and ONSEMI are trademarks of Semiconductor Components Industries, LLC dba **onsemi** or its subsidiaries in the United States and/or other countries. **onsemi** reserves the right to make changes without further notice to any products herein. **onsemi** makes no warranty, representation or guarantee regarding the suitability of its products for any particular purpose, nor does **onsemi** assume any liability arising out of the application or use of any product or circuit, and specifically disclaims any and all liability, including without limitation special, consequential or incidental damages. **onsemi** does not convey any license under its patent rights nor the rights of others.

UDFN6, 1.2x1.0, 0.4P
CASE 517AA
ISSUE D

DATE 03 SEP 2010

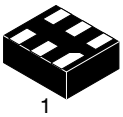

1

SCALE 8:1

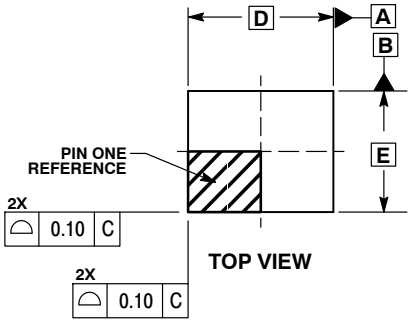

TOP VIEW

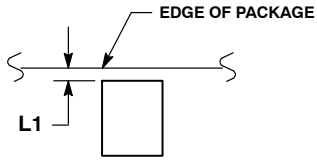

DETAIL A
Bottom View
(Optional)

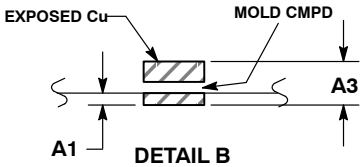

DETAIL B
Side View
(Optional)

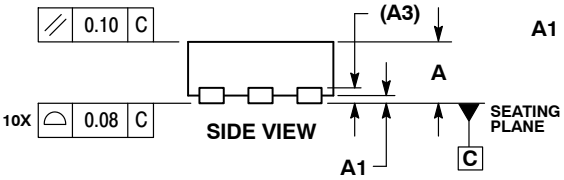

SIDE VIEW

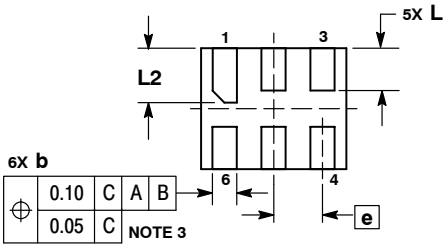

BOTTOM VIEW

NOTES:
1. DIMENSIONING AND TOLERANCING PER ASME Y14.5M, 1994.
2. CONTROLLING DIMENSION: MILLIMETERS.
3. DIMENSION b APPLIES TO PLATED TERMINAL AND IS MEASURED BETWEEN 0.25 AND 0.30 mm FROM TERMINAL.
4. COPLANARITY APPLIES TO THE EXPOSED PAD AS WELL AS THE TERMINALS.

	MILLIMETERS	
DIM	MIN	MAX
A	0.45	0.55
A1	0.00	0.05
A3	0.127 REF	
b	0.15	0.25
D	1.20 BSC	
E	1.00 BSC	
e	0.40 BSC	
L	0.30	0.40
L1	0.00	0.15
L2	0.40	0.50

GENERIC
MARKING DIAGRAM*

X = Specific Device Code
M = Date Code

*This information is generic. Please refer to device data sheet for actual part marking. Pb−Free indicator, “G” or microdot “ ▪”, may or may not be present.

MOUNTING FOOTPRINT*

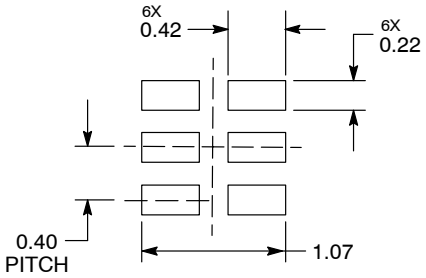

DIMENSIONS: MILLIMETERS

*For additional information on our Pb−Free strategy and soldering details, please download the ON Semiconductor Soldering and Mounting Techniques Reference Manual, SOLDERRM/D.

DOCUMENT NUMBER:	**98AON22068D**	Electronic versions are uncontrolled except when accessed directly from the Document Repository. Printed versions are uncontrolled except when stamped “CONTROLLED COPY” in red.
DESCRIPTION:	**6 PIN UDFN, 1.2X1.0, 0.4P**	**PAGE 1 OF 1**

onsemi and onsemi are trademarks of Semiconductor Components Industries, LLC dba **onsemi** or its subsidiaries in the United States and/or other countries. **onsemi** reserves the right to make changes without further notice to any products herein. **onsemi** makes no warranty, representation or guarantee regarding the suitability of its products for any particular purpose, nor does **onsemi** assume any liability arising out of the application or use of any product or circuit, and specifically disclaims any and all liability, including without limitation special, consequential or incidental damages. **onsemi** does not convey any license under its patent rights nor the rights of others.

UDFN6, 1.45x1.0, 0.5P
CASE 517AQ
ISSUE O

1

SCALE 4:1

DATE 15 MAY 2008

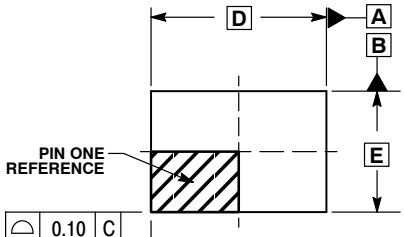

TOP VIEW

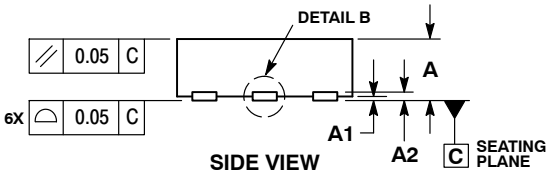

SIDE VIEW

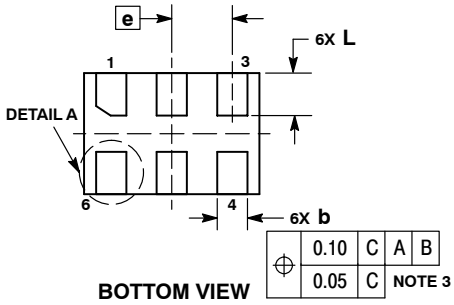

BOTTOM VIEW

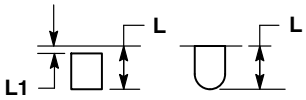

DETAIL A
OPTIONAL CONSTRUCTIONS

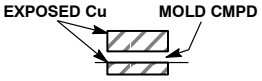

DETAIL B
OPTIONAL CONSTRUCTIONS

NOTES:
1. DIMENSIONING AND TOLERANCING PER ASME Y14.5M, 1994.
2. CONTROLLING DIMENSION: MILLIMETERS.
3. DIMENSION b APPLIES TO PLATED TERMINAL AND IS MEASURED BETWEEN 0.15 AND 0.30 mm FROM THE TERMINAL TIP.

	MILLIMETERS	
DIM	MIN	MAX
A	0.45	0.55
A1	0.00	0.05
A2	0.07 REF	
b	0.20	0.30
D	1.45 BSC	
E	1.00 BSC	
e	0.50 BSC	
L	0.30	0.40
L1	---	0.15

MOUNTING FOOTPRINT

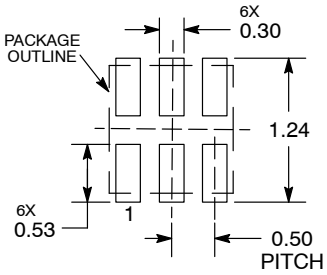

DIMENSIONS: MILLIMETERS

*For additional information on our Pb−Free strategy and soldering details, please download the **onsemi** Soldering and Mounting Techniques Reference Manual, SOLDERRM/D.

GENERIC MARKING DIAGRAM*

X = Specific Device Code
M = Date Code

*This information is generic. Please refer to device data sheet for actual part marking. Pb−Free indicator, “G” or microdot “ ▪”, may or may not be present.

DOCUMENT NUMBER:	**98AON30313E**	Electronic versions are uncontrolled except when accessed directly from the Document Repository. Printed versions are uncontrolled except when stamped “CONTROLLED COPY” in red.
DESCRIPTION:	**UDFN6, 1.45x1.0, 0.5P**	**PAGE 1 OF 1**

onsemi and onsemi are trademarks of Semiconductor Components Industries, LLC dba **onsemi** or its subsidiaries in the United States and/or other countries. **onsemi** reserves the right to make changes without further notice to any products herein. **onsemi** makes no warranty, representation or guarantee regarding the suitability of its products for any particular purpose, nor does **onsemi** assume any liability arising out of the application or use of any product or circuit, and specifically disclaims any and all liability, including without limitation special, consequential or incidental damages. **onsemi** does not convey any license under its patent rights nor the rights of others.

UDFN6, 1x1, 0.35P
CASE 517BX
ISSUE O

SCALE 4:1

DATE 18 MAY 2011

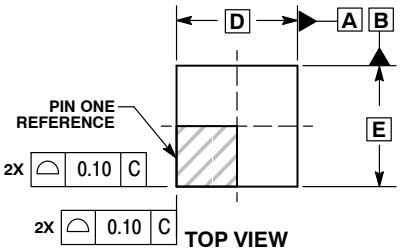

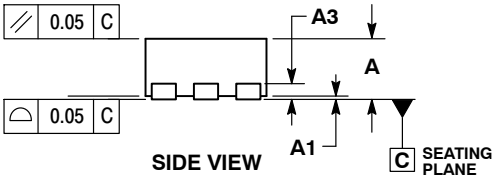

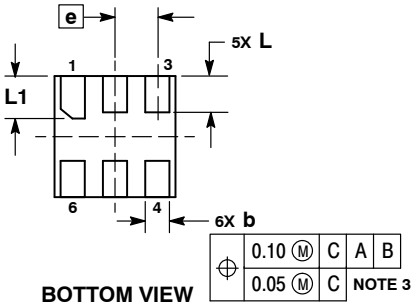

NOTES:
1. DIMENSIONING AND TOLERANCING PER ASME Y14.5M, 1994.
2. CONTROLLING DIMENSION: MILLIMETERS.
3. DIMENSION b APPLIES TO PLATED TERMINAL AND IS MEASURED BETWEEN 0.15 AND 0.20 MM FROM TERMINAL TIP.
4. PACKAGE DIMENSIONS EXCLUSIVE OF BURRS AND MOLD FLASH.

	MILLIMETERS	
DIM	MIN	MAX
A	0.45	0.55
A1	0.00	0.05
A3	0.13 REF	
b	0.12	0.22
D	1.00 BSC	
E	1.00 BSC	
e	0.35 BSC	
L	0.25	0.35
L1	0.30	0.40

RECOMMENDED SOLDERING FOOTPRINT*

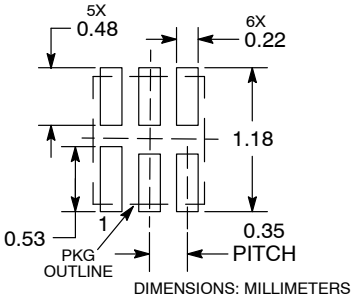

*For additional information on our Pb−Free strategy and soldering details, please download the **onsemi** Soldering and Mounting Techniques Reference Manual, SOLDERRM/D.

GENERIC MARKING DIAGRAM*

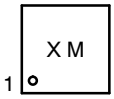

X = Specific Device Code
M = Date Code

*This information is generic. Please refer to device data sheet for actual part marking. Pb−Free indicator, “G” or microdot “▪”, may or may not be present. Some products may not follow the Generic Marking.

DOCUMENT NUMBER:	**98AON56787E**	Electronic versions are uncontrolled except when accessed directly from the Document Repository. Printed versions are uncontrolled except when stamped “CONTROLLED COPY” in red.
DESCRIPTION:	**UDFN6, 1x1, 0.35P**	**PAGE 1 OF 1**

onsemi and onsemi are trademarks of Semiconductor Components Industries, LLC dba **onsemi** or its subsidiaries in the United States and/or other countries. **onsemi** reserves the right to make changes without further notice to any products herein. **onsemi** makes no warranty, representation or guarantee regarding the suitability of its products for any particular purpose, nor does **onsemi** assume any liability arising out of the application or use of any product or circuit, and specifically disclaims any and all liability, including without limitation special, consequential or incidental damages. **onsemi** does not convey any license under its patent rights nor the rights of others.

onsemi, onsemi, and other names, marks, and brands are registered and/or common law trademarks of Semiconductor Components Industries, LLC dba "**onsemi**" or its affiliates and/or subsidiaries in the United States and/or other countries. **onsemi** owns the rights to a number of patents, trademarks, copyrights, trade secrets, and other intellectual property. A listing of **onsemi**'s product/patent coverage may be accessed at www.onsemi.com/site/pdf/Patent−Marking.pdf. **onsemi** reserves the right to make changes at any time to any products or information herein, without notice. The information herein is provided "as−is" and **onsemi** makes no warranty, representation or guarantee regarding the accuracy of the information, product features, availability, functionality, or suitability of its products for any particular purpose, nor does **onsemi** assume any liability arising out of the application or use of any product or circuit, and specifically disclaims any and all liability, including without limitation special, consequential or incidental damages. Buyer is responsible for its products and applications using **onsemi** products, including compliance with all laws, regulations and safety requirements or standards, regardless of any support or applications information provided by **onsemi**. "Typical" parameters which may be provided in **onsemi** data sheets and/or specifications can and do vary in different applications and actual performance may vary over time. All operating parameters, including "Typicals" must be validated for each customer application by customer's technical experts. **onsemi** does not convey any license under any of its intellectual property rights nor the rights of others. **onsemi** products are not designed, intended, or authorized for use as a critical component in life support systems or any FDA Class 3 medical devices or medical devices with a same or similar classification in a foreign jurisdiction or any devices intended for implantation in the human body. Should Buyer purchase or use **onsemi** products for any such unintended or unauthorized application, Buyer shall indemnify and hold **onsemi** and its officers, employees, subsidiaries, affiliates, and distributors harmless against all claims, costs, damages, and expenses, and reasonable attorney fees arising out of, directly or indirectly, any claim of personal injury or death associated with such unintended or unauthorized use, even if such claim alleges that **onsemi** was negligent regarding the design or manufacture of the part. **onsemi** is an Equal Opportunity/Affirmative Action Employer. This literature is subject to all applicable copyright laws and is not for resale in any manner.

ADDITIONAL INFORMATION

TECHNICAL PUBLICATIONS:
Technical Library: www.onsemi.com/design/resources/technical−documentation
onsemi Website: www.onsemi.com

ONLINE SUPPORT: www.onsemi.com/support
For additional information, please contact your local Sales Representative at
www.onsemi.com/support/sales