NLAST9431

Low Voltage Single Supply Dual DPDT Analog Switch

The NLAST9431 is an advanced CMOS dual−independent DPDT (double pole−double throw) analog switch, fabricated with silicon gate CMOS technology. It achieves high−speed propagation delays and low ON resistances while maintaining CMOS low−power dissipation. This DPDT controls analog and digital voltages that may vary across the full power−supply range (from V_{CC} to GND).

The device has been designed so the ON resistance (R_{ON}) is much lower and more linear over input voltage than R_{ON} of typical CMOS analog switches.

The channel−select input structure provides protection when voltages between 0 V and 5.5 V are applied, regardless of the supply voltage. This input structure helps prevent device destruction caused by supply voltage − input/output voltage mismatch, battery backup, hot insertion, etc.

The NLAST9431 can also be used as a quad 2−to−1 multiplexer−demultiplexer analog switch with two Select pins that each controls two multiplexer−demultiplexers.

- Select Pins Compatible with TTL Levels
- Channel Select Input Overvoltage Tolerant to 5.5 V
- Fast Switching and Propagation Speeds
- Break−Before−Make Circuitry
- Low Power Dissipation: I_{CC} = 2 μA (Max) at T_A = 25°C
- Diode Protection Provided on Channel Select Input
- Improved Linearity and Lower ON Resistance over Input Voltage
- Latch−up Performance Exceeds 300 mA
- Chip Complexity: 158 FETs
- Pb−Free Packages are Available

ON Semiconductor®

http://onsemi.com

MARKING DIAGRAMS

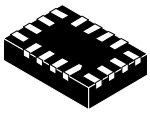

WQFN16
CASE 488AP

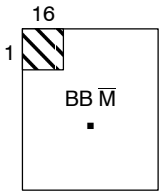

BB	= Specific Device Code
M	= Date Code & Assembly Location
▪	= Pb−Free Device

ORDERING INFORMATION

See detailed ordering and shipping information in the package dimensions section on page 10 of this data sheet.

© Semiconductor Components Industries, LLC, 2008

July, 2008 − Rev. 2

Publication Order Number:
NLAST9431/D

QFN−16 PACKAGE

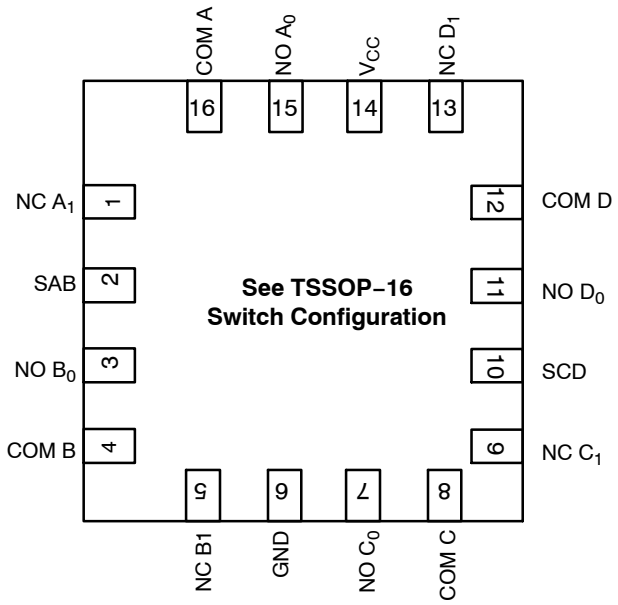

FUNCTION TABLE

Select AB or CD	ON Channel
L	NC to COM
H	NO to COM

TSSOP−16 PACKAGE

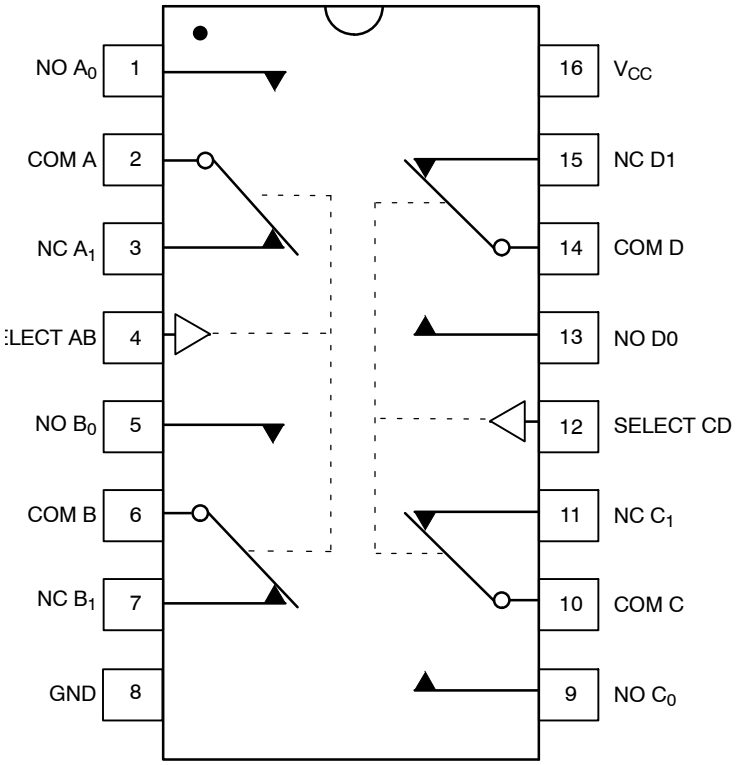

Figure 1. Logic Diagram

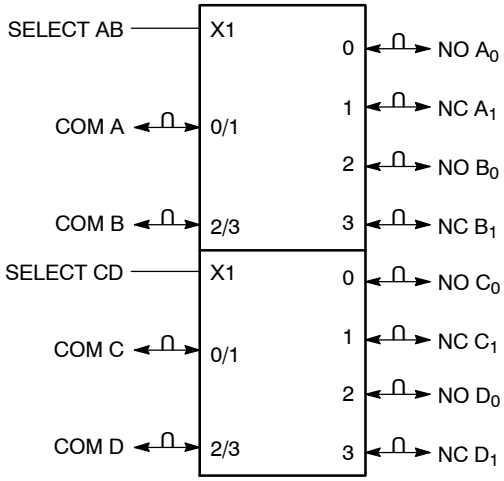

Figure 2. IEC Logic Symbol

MAXIMUM RATINGS

Symbol	Parameter		Value	Unit
V_{CC}	Positive DC Supply Voltage		−0.5 to +7.0	V
V_{IS}	Analog Input Voltage (V_{NO} or V_{COM})		$-0.5 \le V_{IS} \le V_{CC} + 0.5$	V
V_{IN}	Digital Select Input Voltage		$-0.5 \le V_I \le +7.0$	V
I_{IK}	DC Current, Into or Out of Any Pin		±50	mA
P_D	Power Dissipation in Still Air	QFN−16 TSSOP−16	800 450	mW
T_{STG}	Storage Temperature Range		−65 to +150	°C
T_L	Lead Temperature, 1 mm from Case for 10 Seconds		260	°C
T_J	Junction Temperature Under Bias		+150	°C
MSL	Moisture Sensitivity		Level 1	
F_R	Flammability Rating	Oxygen Index: 30% − 35%	UL−94−VO (0.125 in)	
$I_{LATCH-UP}$	Latch−Up Performance	Above V_{CC} and Below GND at 125°C (Note 1)	±300	mA
θ_{JA}	Thermal Resistance	QFN−16 TSSOP−16	80 164	°C/W

Stresses exceeding Maximum Ratings may damage the device. Maximum Ratings are stress ratings only. Functional operation above the Recommended Operating Conditions is not implied. Extended exposure to stresses above the Recommended Operating Conditions may affect device reliability.

1. Tested to EIA/JESD78.

RECOMMENDED OPERATING CONDITIONS

Symbol	Parameter		Min	Max	Unit
V_{CC}	DC Supply Voltage		2.0	5.5	V
V_{IN}	Digital Select Input Voltage		GND	5.5	V
V_{IS}	Analog Input Voltage (NC, NO, COM)		GND	V_{CC}	V
T_A	Operating Temperature Range		−55	+125	°C
t_r, t_f	Input Rise or Fall Time, SELECT	V_{CC} = 3.3 V ± 0.3 V V_{CC} = 5.0 V ± 0.5 V	0 0	100 20	ns/V

DEVICE JUNCTION TEMPERATURE VERSUS TIME TO 0.1% BOND FAILURES

Junction Temperature °C	Time, Hours	Time, Years
80	1,032,200	117.8
90	419,300	47.9
100	178,700	20.4
110	79,600	9.4
120	37,000	4.2
130	17,800	2.0
140	8,900	1.0

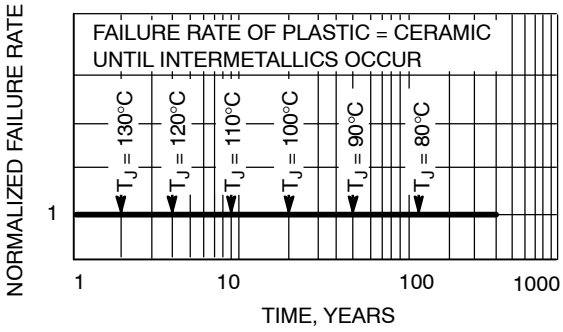

Figure 3. Failure Rate vs. Time Junction Temperature

DC CHARACTERISTICS – Digital Section (Voltages Referenced to GND)

Symbol	Parameter	Condition	V_{CC}	Guaranteed Limit			Unit
				−55°C to 25°C	<85°C	<125°C	
V_{IH}	Minimum High−Level Input Voltage, Select Inputs		3.0 4.5 5.5	1.4 2.0 2.0	1.4 2.0 2.0	1.4 2.0 2.0	V
V_{IL}	Maximum Low−Level Input Voltage, Select Inputs		3.0 4.5 5.5	0.5 0.8 0.8	0.5 0.8 0.8	0.5 0.8 0.8	V
I_{IN}	Maximum Input Leakage Current	V_{IN} = 5.5 V or GND	5.5	±0.2	±2.0	±2.0	μA
I_{OFF}	Power Off Leakage Current, Select Inputs	V_{IN} = 5.5 V or GND	0	±10	±10	±10	μA
I_{CC}	Maximum Quiescent Supply Current	Select and V_{IS} = V_{CC} or GND	5.5	4.0	4.0	8.0	μA

DC ELECTRICAL CHARACTERISTICS – Analog Section

Symbol	Parameter	Condition	V_{CC}	Guaranteed Limit			Unit
				−55°C to 25°C	<85°C	<125°C	
R_{ON}	Maximum "ON" Resistance (Figures 17 – 23)	V_{IN} = V_{IL} or V_{IH} V_{IS} = GND to V_{CC} $\lvert I_{IN} \rvert \leq$ 10.0 mA	2.5 3.0 4.5 5.5	85 45 30 25	95 50 35 30	105 55 40 35	Ω
R_{FLAT} (ON)	ON Resistance Flatness (Figures 17 – 23)	V_{IN} = V_{IL} or V_{IH} $\lvert I_{IN} \rvert \leq$ 10.0 mA V_{IS} = 1 V, 2 V, 3.5 V	4.5	4	4	5	Ω
$I_{NC(OFF)}$ $I_{NO(OFF)}$	NO or NC Off Leakage Current (Figure 9)	V_{IN} = V_{IL} or V_{IH} V_{NO} or V_{NC} = 1.0 V_{COM} 4.5 V	5.5	1	10	100	nA
$I_{COM(ON)}$	COM ON Leakage Current (Figure 9)	V_{IN} = V_{IL} or V_{IH} V_{NO} 1.0 V or 4.5 V with V_{NC} floating or V_{NO} 1.0 V or 4.5 V with V_{NO} floating V_{COM} = 1.0 V or 4.5 V	5.5	1	10	100	nA

AC ELECTRICAL CHARACTERISTICS (Input $t_r = t_f = 3.0$ ns)

Symbol	Parameter	Test Conditions	V_{CC} (V)	V_{IS} (V)	Guaranteed Maximum Limit −55°C to 25°C Min	Typ*	Max	<85°C Min	Max	<125°C Min	Max	Unit
t_{ON}	Turn−On Time (Figures 12 and 13)	$R_L = 300\ \Omega$, $C_L = 35$ pF (Figures 5 and 6)	2.5	2.0	5	23	35	5	38	5	41	ns
			3.0	2.0	5	16	24	5	27	5	30	
			4.5	3.0	2	11	16	2	19	2	22	
			5.5	3.0	2	9	14	2	17	2	20	
t_{OFF}	Turn−Off Time (Figures 12 and 13)	$R_L = 300\ \Omega$, $C_L = 35$ pF (Figures 5 and 6)	2.5	2.0	1	7	12	1	15	1	18	ns
			3.0	2.0	1	5	10	1	13	1	16	
			4.5	3.0	1	4	6	1	9	1	12	
			5.5	3.0	1	3	5	1	8	1	11	
t_{BBM}	Minimum Break−Before−Make Time	$V_{IS} = 3.0$ V (Figure 4) $R_L = 300\ \Omega$, $C_L = 35$ pF	2.5	2.0	1	12		1		1		ns
			3.0	2.0	1	11		1		1		
			4.5	3.0	1	6		1		1		
			5.5	3.0	1	5		1		1		

*Typical Characteristics are at 25°C.

		Typical @ 25, VCC = 5.0 V	
C_{IN}	Maximum Input Capacitance, Select Input	8	pF
C_{NO} or C_{NC}	Analog I/O (Switch Off)	10	
C_{COM}	Common I/O (Switch Off)	10	
$C_{(ON)}$	Feedthrough (Switch On)	20	

ADDITIONAL APPLICATION CHARACTERISTICS (Voltages Referenced to GND Unless Noted)

Symbol	Parameter	Condition	V_{CC} V	Typical 25°C	Unit
BW	Maximum On−Channel −3 dB Bandwidth or Minimum Frequency Response (Figure 11)	$V_{IN} = 0$ dBm V_{IN} centered between V_{CC} and GND (Figure 7)	3.0	145	MHz
			4.5	170	
			5.5	175	
V_{ONL}	Maximum Feedthrough On Loss	$V_{IN} = 0$ dBm @ 100 kHz to 50 MHz V_{IN} centered between V_{CC} and GND (Figure 7)	3.0	−3	dB
			4.5	−3	
			5.5	−3	
V_{ISO}	Off−Channel Isolation (Figure 10)	f = 100 kHz; $V_{IS} = 1$ V RMS V_{IN} centered between V_{CC} and GND (Figure 7)	3.0	−93	dB
			4.5	−93	
			5.5	−93	
Q	Charge Injection Select Input to Common I/O (Figure 15)	$V_{IN} = V_{CC}$ to GND, $F_{IS} = 20$ kHz $t_r = t_f = 3$ ns $R_{IS} = 0\ \Omega$, $C_L = 1000$ pF $Q = C_L * \Delta V_{OUT}$ (Figure 8)	3.0	1.5	pC
			5.5	3.0	
THD	Total Harmonic Distortion THD + Noise (Figure 14)	$F_{IS} = 20$ Hz to 100 kHz, $R_L = Rgen = 600\ \Omega$, $C_L = 50$ pF $V_{IS} = 5.0\ V_{PP}$ sine wave	5.5	0.1	%
VCT	Channel to Channel Crosstalk	f = 100 kHz; $V_{IS} = 1$ V RMS V_{IN} centered between V_{CC} and GND (Figure 7)	5.5	−90	dB
			3.0	−90	

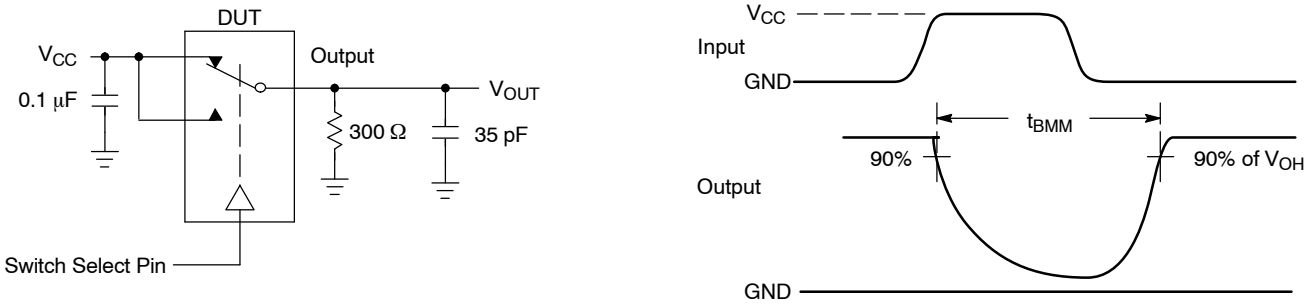

Figure 4. t_{BBM} (Time Break−Before−Make)

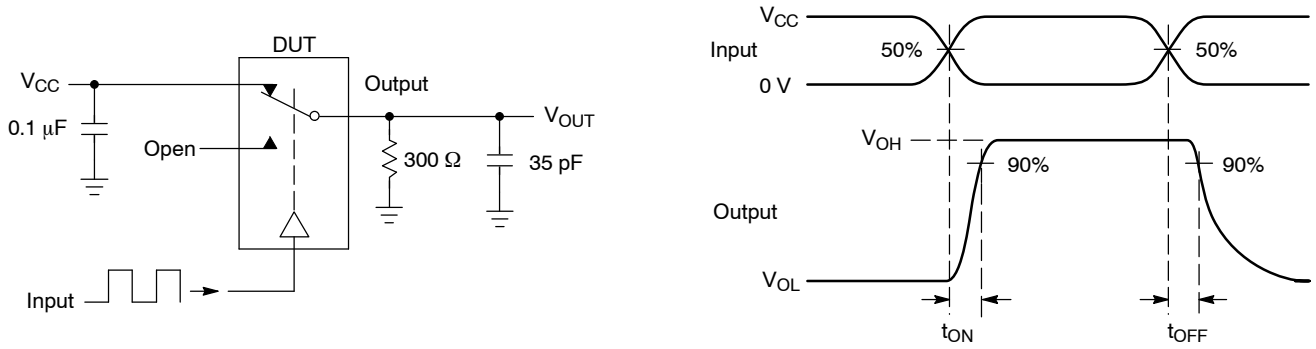

Figure 5. t_{ON}/t_{OFF}

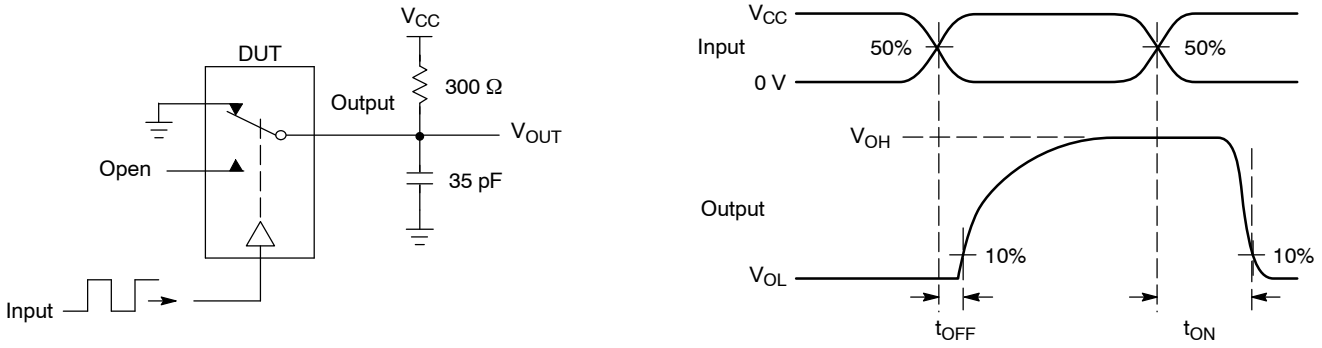

Figure 6. t_{ON}/t_{OFF}

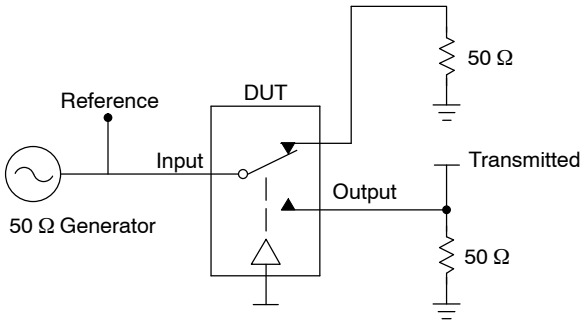

Channel switch control/s test socket is normalized. Off isolation is measured across an off channel. On loss is the bandwidth of an On switch. V_{ISO}, Bandwidth and V_{ONL} are independent of the input signal direction.

V_{ISO} = Off Channel Isolation = 20 Log $\left(\frac{V_{OUT}}{V_{IN}}\right)$ for V_{IN} at 100 kHz

V_{ONL} = On Channel Loss = 20 Log $\left(\frac{V_{OUT}}{V_{IN}}\right)$ for V_{IN} at 100 kHz to 50 MHz

Bandwidth (BW) = the frequency 3 dB below V_{ONL}
V_{CT} = Use V_{ISO} setup and test to all other switch analog input/outputs terminated with 50 Ω

Figure 7. Off Channel Isolation/On Channel Loss (BW)/Crosstalk (On Channel to Off Channel)/V_{ONL}

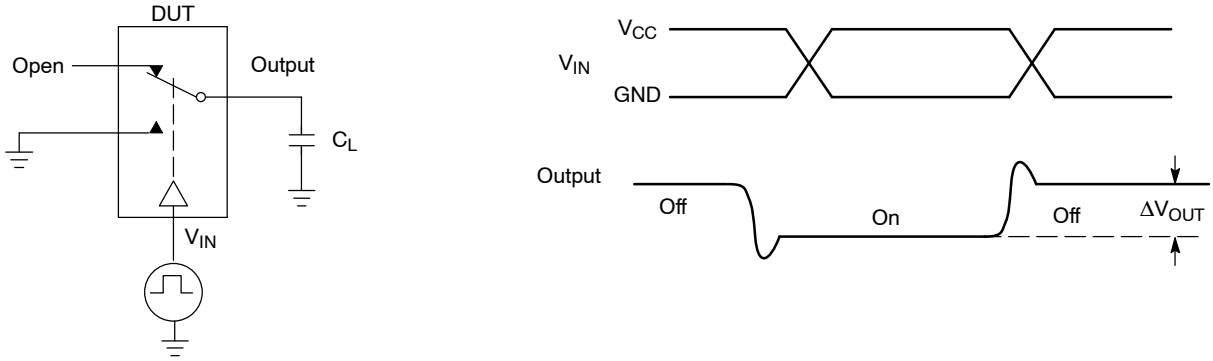

Figure 8. Charge Injection: (Q)

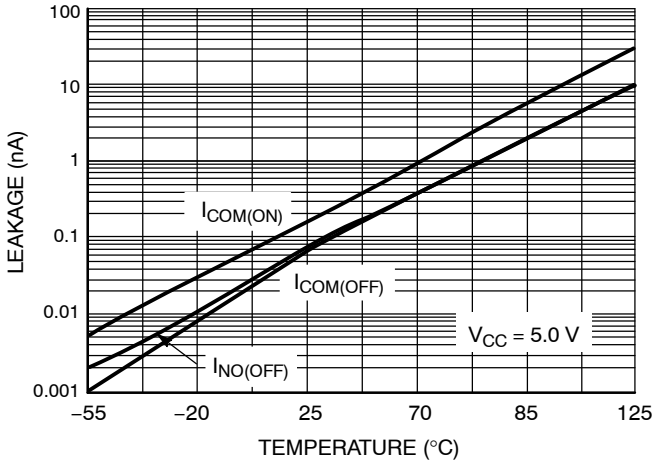

Figure 9. Switch Leakage vs. Temperature

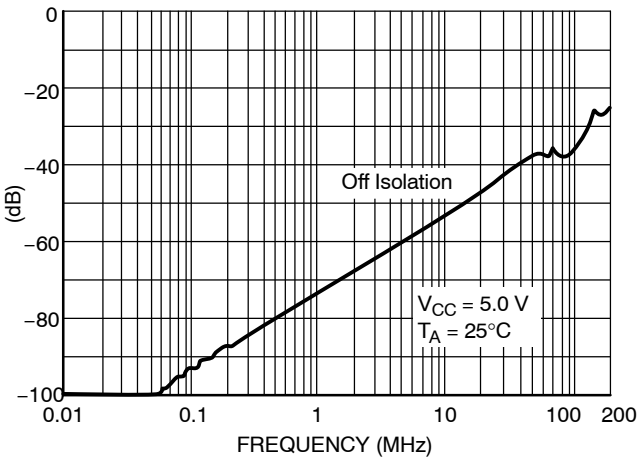

Figure 10. Off−Channel Isolation

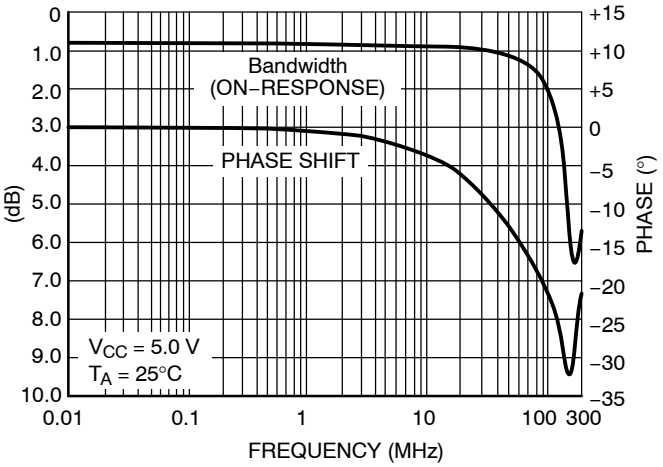

Figure 11. Typical Bandwidth and Phase Shift

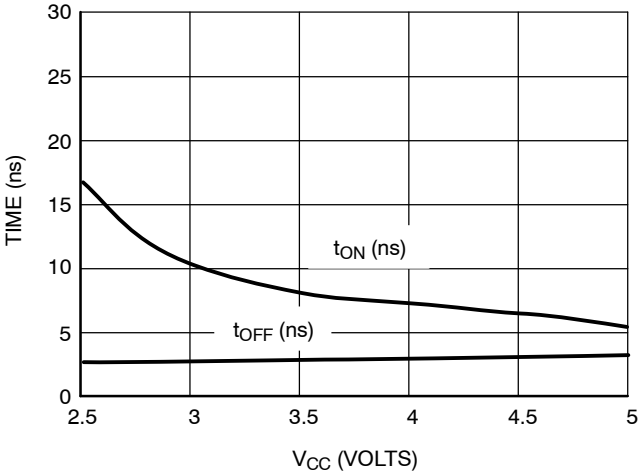

Figure 12. t_{ON} and t_{OFF} vs. V_{CC} at 25°C

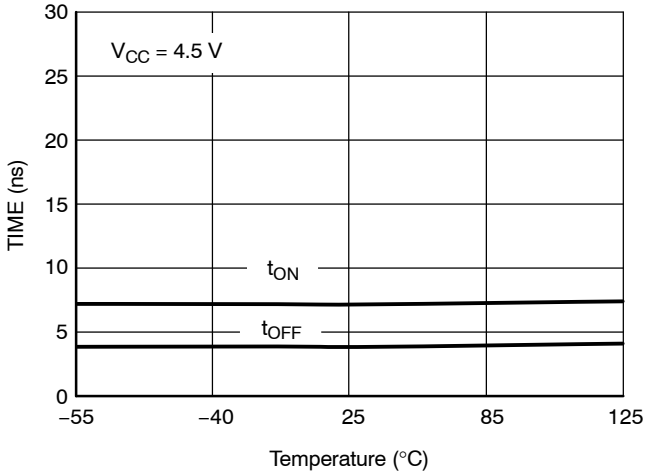

Figure 13. t_{ON} and t_{OFF} vs. Temp

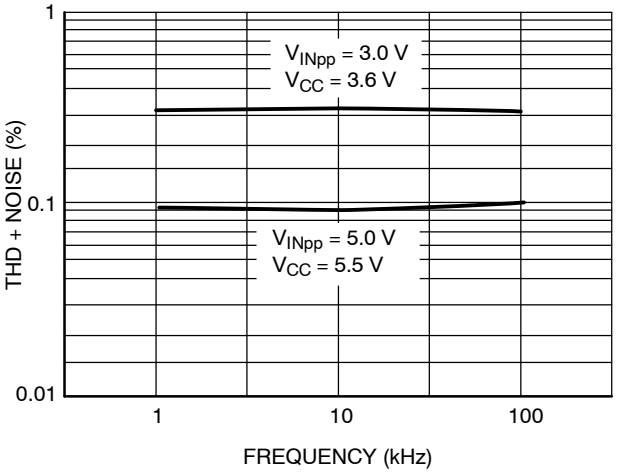

Figure 14. Total Harmonic Distortion Plus Noise vs. Frequency

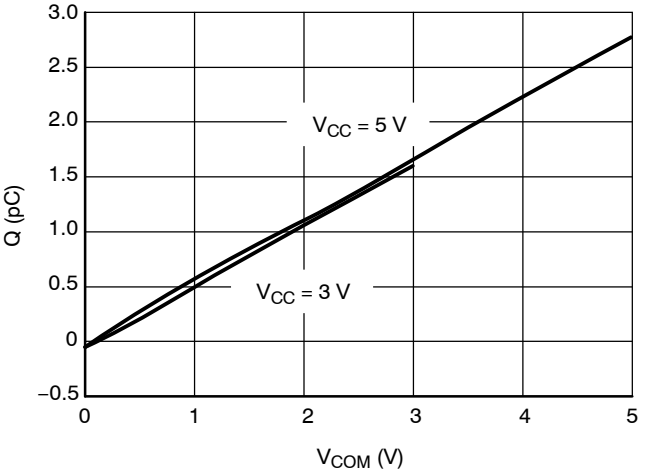

Figure 15. Charge Injection vs. COM Voltage

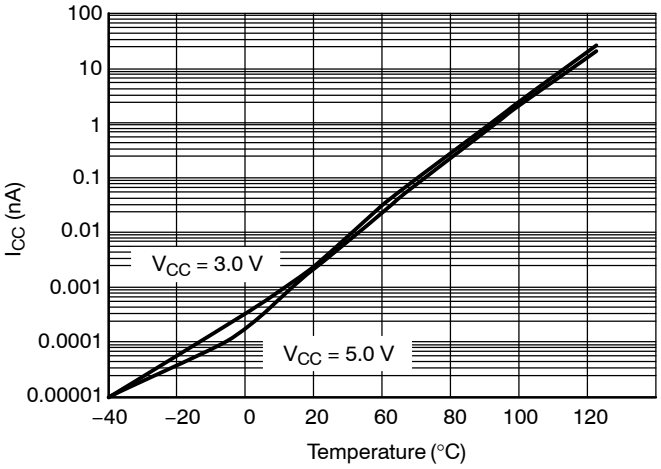

Figure 16. I_{CC} vs. Temp, V_{CC} = 3 V and 5 V

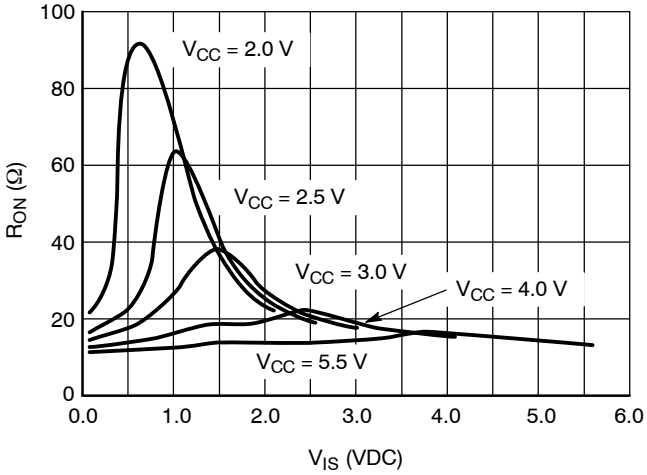

Figure 17. R_{ON} vs. V_{CC}, Temp = 25°C

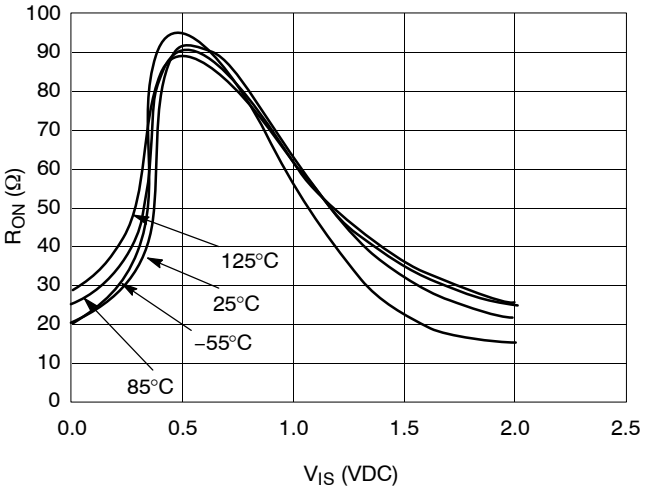

Figure 18. R_{ON} vs Temp, V_{CC} = 2.0 V

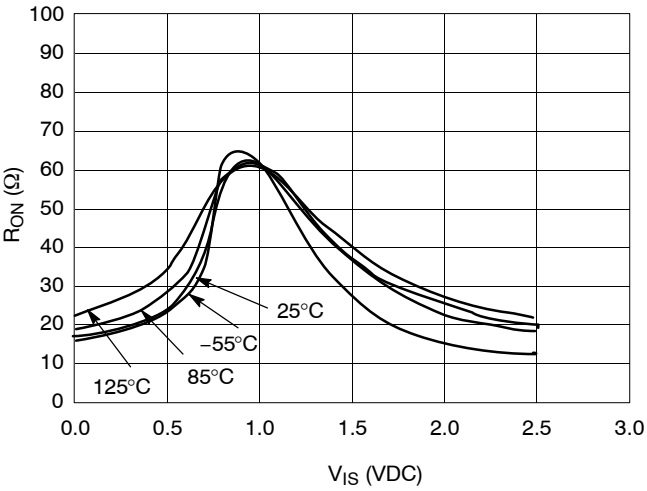

Figure 19. R_{ON} vs. Temp, V_{CC} = 2.5 V

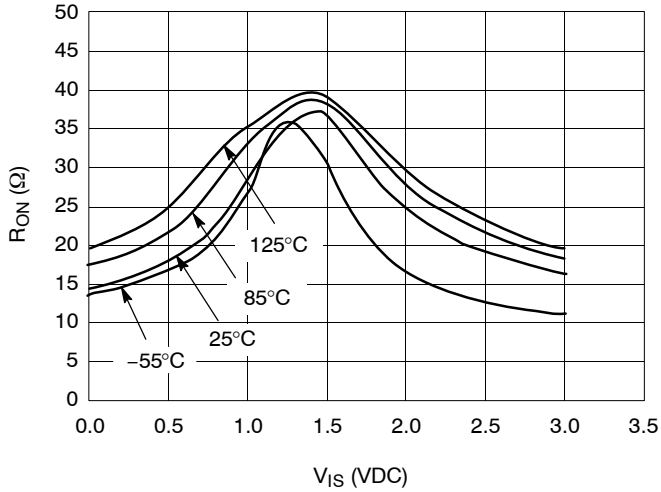

Figure 20. R_{ON} vs. Temp, V_{CC} = 3.0 V

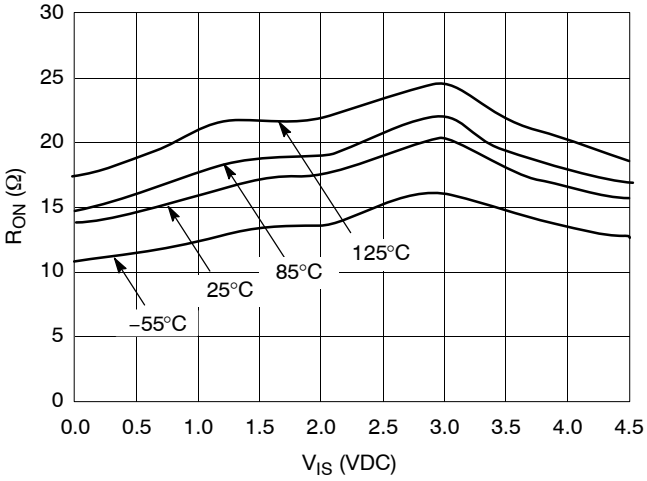

Figure 21. R_{ON} vs. Temp, V_{CC} = 4.5 V

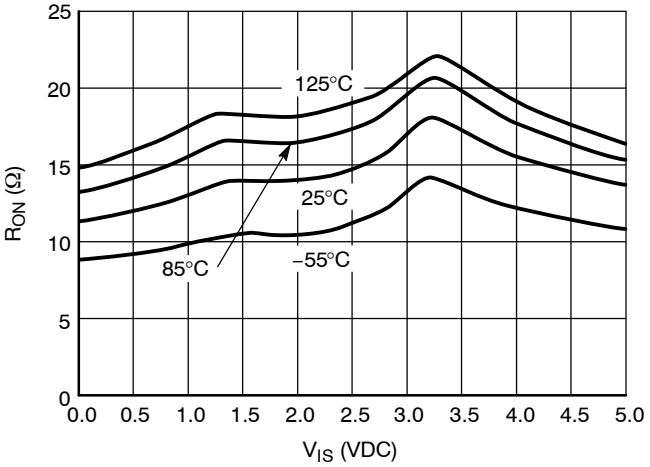

Figure 22. R_{ON} vs. Temp, V_{CC} = 5.0 V

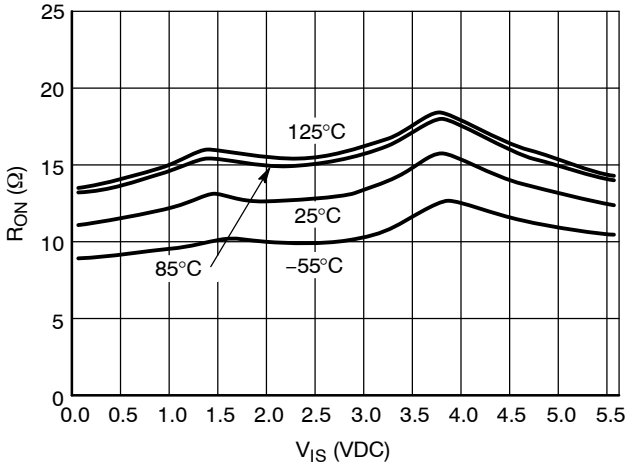

Figure 23. R_{ON} vs. Temp, V_{CC} = 5.5 V

DEVICE ORDERING INFORMATION

Device Order Number	Device Nomenclature					Package Type	Shipping†
	Circuit Indicator	Technology	Device Function	Package Suffix	Tape and Reel Suffix		
NLAST9431MTR2G	NL	AST	9431	MT	R2G	WQFN−16 (Pb−Free)	3000 / Tape & Reel

†For information on tape and reel specifications, including part orientation and tape sizes, please refer to our Tape and Reel Packaging Specifications Brochure, BRD8011/D.

*This package is inherently Pb−Free.

WQFN16, 1.8x2.6, 0.4P
CASE 488AP−01
ISSUE B

DATE 25 JUN 2008

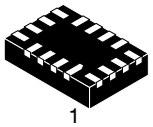

1

SCALE 5:1

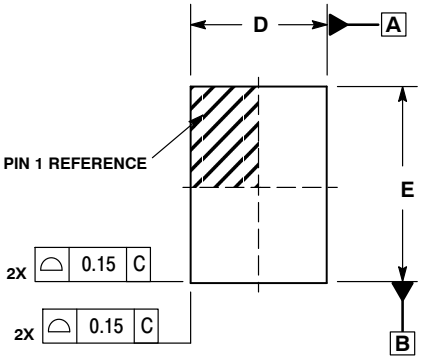

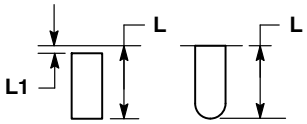

DETAIL A
ALTERNATE TERMINAL CONSTRUCTIONS

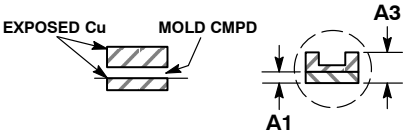

DETAIL B
ALTERNATE CONSTRUCTIONS

NOTES:
1. DIMENSIONING AND TOLERANCING PER ASME Y14.5M, 1994.
2. CONTROLLING DIMENSION: MILLIMETERS
3. DIMENSION b APPLIES TO PLATED TERMINAL AND IS MEASURED BETWEEN 0.25 AND 0.30 MM FROM TERMINAL.
4. COPLANARITY APPLIES TO THE EXPOSED PAD AS WELL AS THE TERMINALS.
5. EXPOSED PADS CONNECTED TO DIE FLAG. USED AS TEST CONTACTS.

	MILLIMETERS	
DIM	MIN	MAX
A	0.70	0.80
A1	0.00	0.050
A3	0.20 REF	
b	0.15	0.25
D	1.80 BSC	
E	2.60 BSC	
e	0.40 BSC	
L	0.30	0.50
L1	0.00	0.15
L2	0.40	0.60

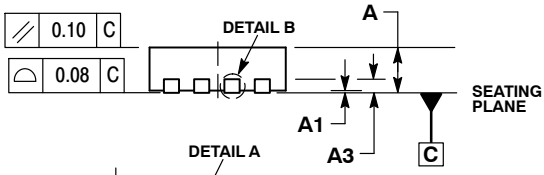

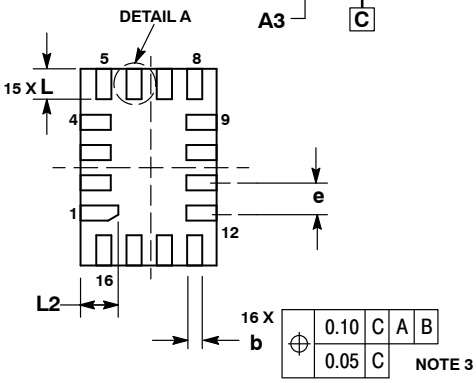

MOUNTING FOOTPRINT

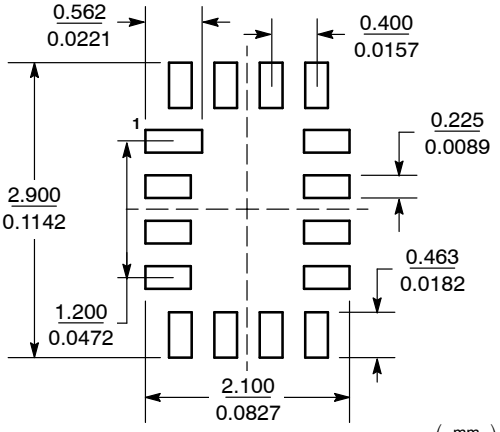

SCALE 20:1 $\left(\frac{\text{mm}}{\text{inches}}\right)$

DOCUMENT NUMBER:	98AON20790D	Electronic versions are uncontrolled except when accessed directly from the Document Repository. Printed versions are uncontrolled except when stamped "CONTROLLED COPY" in red.
DESCRIPTION:	WQFN16, 1.8 X 2.6, 0.4P	PAGE 1 OF 1

ON Semiconductor and ON are trademarks of Semiconductor Components Industries, LLC dba ON Semiconductor or its subsidiaries in the United States and/or other countries. ON Semiconductor reserves the right to make changes without further notice to any products herein. ON Semiconductor makes no warranty, representation or guarantee regarding the suitability of its products for any particular purpose, nor does ON Semiconductor assume any liability arising out of the application or use of any product or circuit, and specifically disclaims any and all liability, including without limitation special, consequential or incidental damages. ON Semiconductor does not convey any license under its patent rights nor the rights of others.

© Semiconductor Components Industries, LLC, 2019

onsemi, onsemi, and other names, marks, and brands are registered and/or common law trademarks of Semiconductor Components Industries, LLC dba "**onsemi**" or its affiliates and/or subsidiaries in the United States and/or other countries. **onsemi** owns the rights to a number of patents, trademarks, copyrights, trade secrets, and other intellectual property. A listing of **onsemi**'s product/patent coverage may be accessed at www.onsemi.com/site/pdf/Patent−Marking.pdf. **onsemi** reserves the right to make changes at any time to any products or information herein, without notice. The information herein is provided "as−is" and **onsemi** makes no warranty, representation or guarantee regarding the accuracy of the information, product features, availability, functionality, or suitability of its products for any particular purpose, nor does **onsemi** assume any liability arising out of the application or use of any product or circuit, and specifically disclaims any and all liability, including without limitation special, consequential or incidental damages. Buyer is responsible for its products and applications using **onsemi** products, including compliance with all laws, regulations and safety requirements or standards, regardless of any support or applications information provided by **onsemi**. "Typical" parameters which may be provided in **onsemi** data sheets and/or specifications can and do vary in different applications and actual performance may vary over time. All operating parameters, including "Typicals" must be validated for each customer application by customer's technical experts. **onsemi** does not convey any license under any of its intellectual property rights nor the rights of others. **onsemi** products are not designed, intended, or authorized for use as a critical component in life support systems or any FDA Class 3 medical devices or medical devices with a same or similar classification in a foreign jurisdiction or any devices intended for implantation in the human body. Should Buyer purchase or use **onsemi** products for any such unintended or unauthorized application, Buyer shall indemnify and hold **onsemi** and its officers, employees, subsidiaries, affiliates, and distributors harmless against all claims, costs, damages, and expenses, and reasonable attorney fees arising out of, directly or indirectly, any claim of personal injury or death associated with such unintended or unauthorized use, even if such claim alleges that **onsemi** was negligent regarding the design or manufacture of the part. **onsemi** is an Equal Opportunity/Affirmative Action Employer. This literature is subject to all applicable copyright laws and is not for resale in any manner.

ADDITIONAL INFORMATION

TECHNICAL PUBLICATIONS:
Technical Library: www.onsemi.com/design/resources/technical−documentation
onsemi Website: www.onsemi.com

ONLINE SUPPORT: www.onsemi.com/support
For additional information, please contact your local Sales Representative at
www.onsemi.com/support/sales