2-Bit 100 Mb/s Configurable Dual-Supply Level Translator

NLSX5002

The NLSX5002 is a 2-bit configurable dual-supply autosensing bidirectional level translator that does not require a direction control pin. The I/O V_{CC}- and I/O V_L-ports are designed to track two different power supply rails, V_{CC} and V_L respectively. Both the V_{CC} and the V_L supply rails are configurable from 0.9 V to 4.5 V. This allows a logic signal on the V_L side to be translated to either a higher or a lower logic signal voltage on the V_{CC} side, and vice-versa.

The NLSX5002 offers the feature that the values of the V_{CC} and V_L supplies are independent. Design flexibility is maximized because V_L can be set to a value either greater than or less than the V_{CC} supply. In contrast, the majority of competitive auto sense translators have a restriction that the value of the V_L supply must be equal to less than (V_{CC} - 0.4) V.

The NLSX5002 has high output current capability, which allows the translator to drive high capacitive loads such as most high frequency EMI filters. Another feature of the NLSX5002 is that each I/O_V_{Ln} and I/O_V_{CCn} channel can function as either an input or an output.

An Output Enable (EN) input is available to reduce the power consumption. The EN pin can be used to disable both I/O ports by putting them in 3-state which significantly reduces the supply current from both V_{CC} and V_L. The EN signal is referenced to the V_L supply.

DISCONTINUED
THIS DEVICE IS NOT RECOMMENDED FOR NEW DESIGN
PLEASE CONTACT YOUR onsemi
REPRESENTATIVE FOR INFORMATION

Features

- Wide V_{CC}, V_L Operating Range: 0.9 V to 4.5 V
- V_L and V_{CC} are independent
  - V_L may be greater than, equal to, or less than V_{CC}
- High−Speed with 140 Mb/s Guaranteed Date Rate for V_{CC}, V_L > 1.8 V
- Low Bit−to−Bit Skew
- Overvoltage Tolerant Enable and I/O Pins
- Non−Preferential Power−Up Sequencing
- Power−Off Protection
- Small Packaging: UQFN8, 1.4 mm x 1.2 mm, 0.4 mm Pitch
- These Devices are Pb−Free and are RoHS Compliant

Typical Applications

- Mobile Phones, PDAs, Other Portable Devices

Important Information

- ESD Protection for All Pins:
  - HBM (Human Body Model) > 8000 V
  - MM (Machine Model) > 400 V

ON Semiconductor®

www.onsemi.com

MARKING DIAGRAM

UQFN8
MU SUFFIX
CASE 523AS

A = Specific Device Code
M = Date Code

ORDERING INFORMATION

Device	Package	Shipping†
NLSX5002BMUTCG	UQFN8 (Pb−Free)	3000/Tape & Reel

†For information on tape and reel specifications, including part orientation and tape sizes, please refer to our Tape and Reel Packaging Specification Brochure, BRD8011/D.

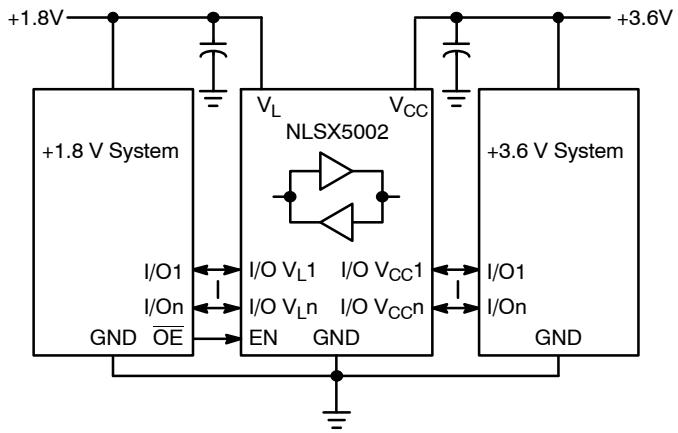

Figure 1. Typical Application Circuit

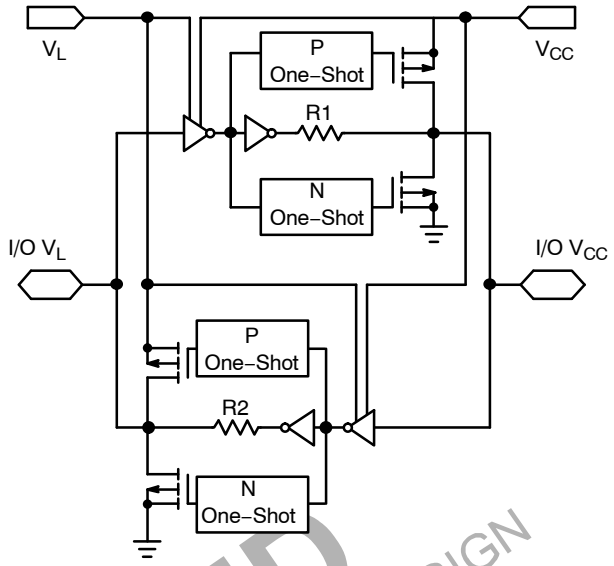

Figure 2. Simplified Functional Diagram (1 I/O Line)

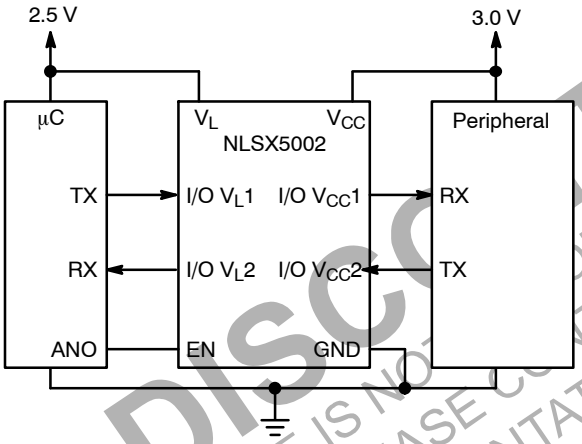

Figure 3. Application Example for $V_L < V_{CC}$

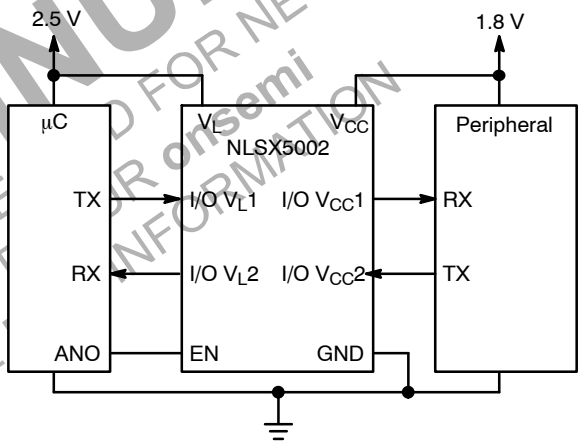

Figure 4. Application Example for $V_L > V_{CC}$

DISCONTINUED
THIS DEVICE IS NOT RECOMMENDED FOR NEW DESIGN
PLEASE CONTACT onsemi
REPRESENTATIVE FOR INFORMATION

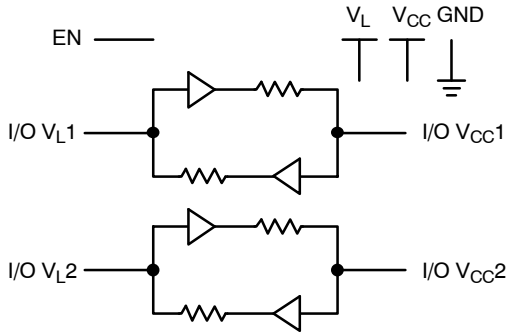

Figure 5. Logic Diagram

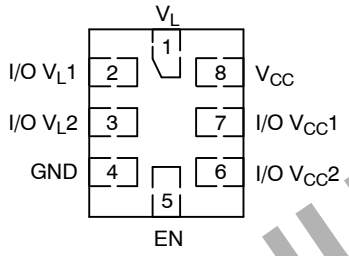

UQFN8
(Top View)

Figure 6. Pin Assignments

DISCONTINUED
THIS DEVICE IS NOT RECOMMENDED FOR NEW DESIGN
PLEASE CONTACT YOUR onsemi
REPRESENTATIVE FOR INFORMATION

PIN ASSIGNMENT

Pins	Description
V_{CC}	V_{CC} Input Voltage
V_L	V_L Input Voltage
GND	Ground
EN	Output Enable
I/O V_{CC}n	I/O Port, Referenced to V_{CC}
I/O V_Ln	I/O Port, Referenced to V_L

FUNCTION TABLE

EN	Operating Mode
L	Hi−Z
H	I/O Buses Connected

MAXIMUM RATINGS

Symbol	Parameter	Value	Condition	Unit
V_{CC}	I/O V_{CC}−side DC Supply Voltage	−0.5 to +5.5		V
V_L	I/O V_L−side DC Supply Voltage	−0.5 to +5.5		V
I/O V_{CC}	V_{CC}−Referenced DC Input/Output Voltage	−0.5 to +5.5		V
I/O V_L	V_L−Referenced DC Input/Output Voltage	−0.5 to +5.5		V
V_I	Enable Control Pin DC Input Voltage	−0.5 to +5.5		V
I_{IK}	DC Input Diode Current	−50	V_I < GND	mA
I_{OK}	DC Output Diode Current	−50	V_O < GND	mA
I_{CC}	DC Supply Current Through V_{CC}	±100		mA
I_L	DC Supply Current Through V_L	±100		mA
I_{GND}	DC Ground Current Through Ground Pin	±100		mA
T_{STG}	Storage Temperature	−65 to +150		°C

Stresses exceeding those listed in the Maximum Ratings table may damage the device. If any of these limits are exceeded, device functionality should not be assumed, damage may occur and reliability may be affected.

RECOMMENDED OPERATING CONDITIONS

Symbol	Parameter	Min	Max	Unit
V_{CC}	I/O V_{CC}−side Positive DC Supply Voltage	0.9	4.5	V
V_L	I/O V_L−side Positive DC Supply Voltage	0.9	4.5	V
V_I	Enable Control Pin Voltage (Referenced to V_L)	GND	4.5	V
V_{IO}	Bus Input/Output Voltage I/O V_{CC} I/O V_L	 GND GND	 4.5 4.5	V
T_A	Operating Temperature Range	−55	+125	°C
$\Delta t/\Delta V$	Input Transition Rise or Rate V_I, V_{IO} from 30% to 70% of V_{CC}; V_{CC} = 3.3 V ± 0.3 V	0	10	ns

DISCONTINUED
THIS DEVICE IS NOT RECOMMENDED FOR NEW DESIGN
PLEASE CONTACT YOUR onsemi
REPRESENTATIVE FOR INFORMATION

DC ELECTRICAL CHARACTERISTICS

Symbol	Parameter	Test Conditions (Note 1)	V_{CC} (V) (Note 2)	V_L (V) (Note 3)	−40°C to +85°C			−55°C to +125°C		Unit
					Min	Typ (Note 4)	Max	Min	Max	
V_{IHC}	I/O V_{CC} Input HIGH Voltage		0.9 – 4.5	0.9 – 4.5	2/3 * V_{CC}	–	–	2/3 * V_{CC}	–	V
V_{ILC}	I/O V_{CC} Input LOW Voltage		0.9 – 4.5	0.9 – 4.5	–	–	1/3 * V_{CC}	–	1/3 * V_{CC}	V
V_{IHL}	I/O V_L Input HIGH Voltage		0.9 – 4.5	0.9 – 4.5	2/3 * V_L	–	–	2/3 * V_L	–	V
V_{ILL}	I/O V_L Input LOW Voltage		0.9 – 4.5	0.9 – 4.5	–	–	1/3 * V_L	–	1/3 * V_L	V
V_{IH}	Control Pin Input HIGH Voltage	T_A = +25°C	0.9 – 4.5	0.9 – 4.5	2/3 * V_L	–	–	2/3 * V_L	–	V
V_{IL}	Control Pin Input LOW Voltage	T_A = +25°C	0.9 – 4.5	0.9 – 4.5	–	–	1/3 * V_L	–	1/3 * V_L	V
V_{OHC}	I/O V_{CC} Output HIGH Voltage	I/O V_{CC} source current = 20 μA	0.9 – 4.5	0.9 – 4.5	0.9 * V_{CC}	–	–	0.9 * V_{CC}	–	V
V_{OLC}	I/O V_{CC} Output LOW Voltage	I/O V_{CC} sink current = 20 μA	0.9 – 4.5	0.9 – 4.5	–	–	0.2	–	0.2	V
V_{OHL}	I/O V_L Output HIGH Voltage	I/O V_L source current = 20 μA	0.9 – 4.5	0.9 – 4.5	0.9 * V_L	–	–	0.9 * V_L	–	V
V_{OLL}	I/O V_L Output LOW Voltage	I/O V_L sink current = 20 μA	0.9 – 4.5	0.9 – 4.5	–	–	0.2	–	0.2	V
I_{QVCC}	V_{CC} Supply Current	EN = V_L, I_O = 0 A, (I/O V_{CC} = 0 V, I/O V_L = 0 V) or (I/O V_{CC} = V_{CC}, I/O V_L = V_L)	0.9 – 4.5	0.9 – 4.5	–	–	1	–	2.5	μA
I_{QVL}	V_L Supply Current		0.9 – 4.5	0.9 – 4.5	–	–	1	–	2.5	μA
I_{TS-VCC}	V_{CC} Tristate Output Mode Supply Current	T_A = +25°C, EN = 0 V	0.9 – 4.5	0.9 – 4.5	–	–	1	–	2.1	μA
I_{TS-VL}	V_L Tristate Output Mode Supply Current	T_A = +25°C, EN = 0 V	0.9 – 4.5	0.9 – 4.5	–	–	1	–	2.1	μA
I_{OZ}	I/O Tristate Output Mode Leakage Current	T_A = +25°C, EN = 0V	0.9 – 4.5	0.9 – 4.5	–	–	±1	–	±1.5	μA
I_I	Control Pin Input Current	T_A = +25°C	0.9 – 4.5	0.9 – 4.5	–	–	±1	–	±1	μA
I_{OFF}	Power Off Leakage Current	I/O V_{CC} = 0 to 4.5V, I/O V_L = 0 to 4.5 V	0	0	–	–	1	–	1.5	μA
			0.9 – 4.5	0	–	–	1	–	1.5	
			0	0.9 – 4.5	–	–	1	–	1.5	

1. Normal test conditions are V_I = 0 V, $C_{IOVCC} \leq$ 15 pF and $C_{IOVL} \leq$ 15 pF, unless otherwise specified.
2. V_{CC} is the supply voltage associated with the I/O V_{CC} port, and V_{CC} ranges from +0.9 V to 4.5 V under normal operating conditions.
3. V_L is the supply voltage associated with the I/O V_L port, and V_L ranges from +0.9 V to 4.5 V under normal operating conditions.
4. Typical values are for V_{CC} = +2.8 V, V_L = +1.8 V and T_A = +25°C. All units are production tested at T_A = +25°C. Limits over the operating temperature range are guaranteed by design.

DISCONTINUED
THIS DEVICE IS NOT RECOMMENDED FOR NEW DESIGN
PLEASE CONTACT YOUR onsemi
REPRESENTATIVE FOR INFORMATION

TIMING CHARACTERISTICS

Symbol	Parameter	Test Conditions (Note 5)	V_{CC} (V) (Note 6)	V_L (V) (Note 7)	−55°C to +125°C Min	Typ (Note 8)	Max	Unit
t_{R-VCC}	I/O V_{CC} Rise Time	C_{IOVCC} = 15 pF	0.9 – 4.5	0.9 – 4.5	–	–	8.5	ns
			1.8 – 4.5	1.8 – 4.5	–	–	3.5	
t_{F-VCC}	I/O V_{CC} Fall Time	C_{IOVCC} = 15 pF	0.9 – 4.5	0.9 – 4.5	–	–	8.5	ns
			1.8 – 4.5	1.8 – 4.5	–	–	3.5	
t_{R-VL}	I/O V_L Rise Time	C_{IOVL} = 15 pF	0.9 – 4.5	0.9 – 4.5	–	–	8.5	ns
			1.8 – 4.5	1.8 – 4.5	–	–	3.5	
t_{F-VL}	I/O V_L Fall Time	C_{IOVL} = 15 pF	0.9 – 4.5	0.9 – 4.5	–	–	8.5	ns
			1.8 – 4.5	1.8 – 4.5	–	–	3.5	
Z_{OVCC}	I/O V_{CC} One−Shot Output Impedance		0.9 1.8 4.5	0.9 – 4.5	– – –	37 20 6.0	– – –	Ω
Z_{OVL}	I/O V_L One−Shot Output Impedance		0.9 – 4.5	0.9 1.8 4.5	– – –	37 20 6.0	– – –	Ω
t_{PD_VL-VCC}	Propagation Delay (Driving I/O V_{CC})	C_{IOVCC} = 25 pF	0.9 – 4.5	0.9 – 4.5	–	–	40	ns
			1.8 – 4.5	1.8 – 4.5	–	–	13	
t_{PD_VCC-VL}	Propagation Delay (Driving I/O V_L)	C_{IOVL} = 25 pF	0.9 – 4.5	0.9 – 4.5	–	–	40	ns
			1.8 – 4.5	1.8 – 4.5	–	–	13	
t_{SK}	Channel−to−Channel Skew	C_{IOVCC} = 15 pF, C_{IOVL} = 15 pF (Note 9)	0.9 – 4.5	0.9 – 4.5	–	–	0.15	ns
I_{IN_PEAK}	Input Driver Maximum Peak Current	EN = V_L; I/O_V_{CC} = 1 MHz Square Wave, Amplitude = V_{CC}, or I/O_V_L = 1 MHz Square Wave, Amplitude = V_L	0.9 – 4.5	0.9 – 4.5	–	–	5.0	mA

5. Normal test conditions are V_I = 0 V, $C_{IOVCC} \leq$ 15 pF and $C_{IOVL} \leq$ 15 pF, unless otherwise specified.
6. V_{CC} is the supply voltage associated with the I/O V_{CC} port, and V_{CC} ranges from +0.9 V to 4.5 V under normal operating conditions.
7. V_L is the supply voltage associated with the I/O V_L port, and V_L ranges from +0.9 V to 4.5 V under normal operating conditions.
8. Typical values are for V_{CC} = +2.8 V, V_L = +1.8 V and T_A = +25°C. All units are production tested at T_A = +25°C. Limits over the operating temperature range are guaranteed by design.
9. Guaranteed by design.

DISCONTINUED
THIS DEVICE IS NOT RECOMMENDED FOR NEW DESIGN
PLEASE CONTACT YOUR onsemi
REPRESENTATIVE FOR INFORMATION

TIMING CHARACTERISTICS (continued)

Symbol	Parameter		Test Conditions (Note 10)	V_{CC} (V) (Note 11)	V_L (V) (Note 12)	–55°C to +125°C Min	Typ (Note 13)	Max	Unit
t_{EN-VCC}	I/O_V_{CC} Output Enable Time	t_{PZH}	C_{IOVCC} = 15 pF, I/O_V_L = V_L	0.9 – 4.5	0.9 – 4.5	–	–	160	ns
		t_{PZL}	C_{IOVCC} = 15 pF, I/O_V_L = 0 V	0.9 – 4.5	0.9 – 4.5	–	–	130	
t_{EN-VL}	I/O_V_L Output Enable Time	t_{PZH}	C_{IOVL} = 15 pF, I/O_V_{CC} = V_{CC}	0.9 – 4.5	0.9 – 4.5	–	–	160	ns
		t_{PZL}	C_{IOVL} = 15 pF, I/O_V_{CC} = 0 V	0.9 – 4.5	0.9 – 4.5	–	–	130	
$t_{DIS-VCC}$	I/O_V_{CC} Output Disable Time	t_{PHZ}	C_{IOVCC} = 15 pF, I/O_V_L = V_L	0.9 – 4.5	0.9 – 4.5	–	–	210	ns
		t_{PLZ}	C_{IOVCC} = 15 pF, I/O_V_L = 0 V	0.9 – 4.5	0.9 – 4.5	–	–	175	
t_{DIS-VL}	I/O_V_L Output Disable Time	t_{PHZ}	C_{IOVL} = 15 pF, I/O_V_{CC} = V_{CC}	0.9 – 4.5	0.9 – 4.5	–	–	210	ns
		t_{PLZ}	C_{IOVL} = 15 pF, I/O_V_{CC} = 0 V	0.9 – 4.5	0.9 – 4.5	–	–	175	
MDR	Maximum Data Rate		C_{IO} = 15 pF	0.9 – 4.5	0.9 – 4.5	50	–	–	mbps
				1.8 – 4.5	1.8 – 4.5	140	–	–	

10. Normal test conditions are V_I = 0 V, $C_{IOVCC} \leq$ 15 pF and $C_{IOVL} \leq$ 15 pF, unless otherwise specified.
11. V_{CC} is the supply voltage associated with the I/O V_{CC} port, and V_{CC} ranges from +0.9 V to 4.5 V under normal operating conditions.
12. V_L is the supply voltage associated with the I/O V_L port, and V_L ranges from +0.9 V to 4.5 V under normal operating conditions.
13. Typical values are for V_{CC} = +3.3 V, V_L = +1.8 V and T_A = +25°C. All units are production tested at T_A = +25°C. Limits over the operating temperature range are guaranteed by design.

DISCONTINUED
THIS DEVICE IS NOT RECOMMENDED FOR NEW DESIGN
PLEASE CONTACT YOUR onsemi
REPRESENTATIVE FOR INFORMATION

DYNAMIC POWER CONSUMPTION (T_A = +25°C)

Symbol	Parameter	Test Conditions	V_{CC} (V) (Note 14)	V_L (V) (Note 15)	Typ (Note 16)	Unit
C_{PD_VL}	Power Dissipation Capacitance (Referred to V_L)	V_L = Input port, V_{CC} = Output Port C_{Load} = 0, f = 1 MHz, EN = V_L (Output enabled)	0.9	4.5	13	pF
			1.5	1.8	7.0	
			1.8	1.5	6.0	
			1.8	1.8	6.0	
			1.8	2.8	7.0	
			2.5	2.5	6.0	
			2.8	1.8	6.0	
			4.5	0.9	10	
		V_{CC} = Input port, V_L = Output Port C_{Load} = 0, f = 1 MHz, EN = V_L (Output enabled)	0.9	4.5	19	pF
			1.5	1.8	16	
			1.8	1.5	16	
			1.8	1.8	16	
			1.8	2.8	16	
			2.5	2.5	16	
			2.8	1.8	16	
			4.5	0.9	16	
C_{PD_VCC}	Power Dissipation Capacitance (Referred to V_{CC})	V_L = Input port, V_{CC} = Output Port C_{Load} = 0, f = 1 MHz, EN = V_L (Output enabled)	0.9	4.5	16	pF
			1.5	1.8	17	
			1.8	1.5	17	
			1.8	1.8	17	
			1.8	2.8	17	
			2.5	2.5	18	
			2.8	1.8	18	
			4.5	0.9	21	
		V_{CC} = Input port, V_L = Output Port C_{Load} = 0, f = 1 MHz, EN = V_L (Output enabled)	0.9	4.5	13	pF
			1.5	1.8	6.0	
			1.8	1.5	7.0	
			1.8	1.8	7.0	
			1.8	2.8	6.0	
			2.5	2.5	7.0	
			2.8	1.8	7.0	
			4.5	0.9	15	

14. V_{CC} is the supply voltage associated with the I/O V_{CC} port, and V_{CC} ranges from +0.9 V to 4.5 V under normal operating conditions.
15. V_L is the supply voltage associated with the I/O V_L port, and V_L ranges from +0.9 V to 4.5 V under normal operating conditions.
16. Typical values are at T_A = +25°C.
17. $C_{PD\ VL}$ and $C_{PD\ VCC}$ are defined as the value of the IC's equivalent capacitance from which the operating current can be calculated for the V_L and V_{CC} power supplies, respectively. $I_{CC} = I_{CC}$ (dynamic) + I_{CC} (static) ≈ I_{CC}(operating) ≈ $C_{PD} \times V_{CC} \times f_{IN} \times N_{SW}$ where $I_{CC} = I_{CC_VCC} + I_{CC\ VL}$ and N_{SW} = total number of outputs switching.

DISCONTINUED
THIS DEVICE IS NOT RECOMMENDED FOR NEW DESIGN
PLEASE CONTACT YOUR onsemi
REPRESENTATIVE FOR INFORMATION

STATIC POWER CONSUMPTION (T_A = +25°C)

Symbol	Parameter	Test Conditions	V_{CC} (V) (Note 18)	V_L (V) (Note 19)	Typ (Note 20)	Unit
C_{PD_VL}	Power Dissipation Capacitance (Referred to V_L)	V_L = Input port, V_{CC} = Output Port C_{Load} = 0, f = 1 MHz, EN = GND (outputs disabled)	0.9	4.5	0.01	pF
			1.5	1.8	0.01	
			1.8	1.5	0.01	
			1.8	1.8	0.01	
			1.8	2.8	0.01	
			2.5	2.5	0.01	
			2.8	1.8	0.01	
			4.5	0.9	0.01	
		V_{CC} = Input port, V_L = Output Port C_{Load} = 0, f = 1 MHz, EN = GND (outputs disabled)	0.9	4.5	0.01	pF
			1.5	1.8	0.01	
			1.8	1.5	0.01	
			1.8	1.8	0.01	
			1.8	2.8	0.01	
			2.5	2.5	0.01	
			2.8	1.8	0.01	
			4.5	0.9	0.01	
C_{PD_VCC}	Power Dissipation Capacitance (Referred to V_{CC})	V_L = Input port, V_{CC} = Output Port C_{Load} = 0, f = 1 MHz, EN = GND (outputs disabled)	0.9	4.5	0.01	pF
			1.5	1.8	0.01	
			1.8	1.5	0.01	
			1.8	1.8	0.01	
			1.8	2.8	0.01	
			2.5	2.5	0.01	
			2.8	1.8	0.01	
			4.5	0.9	0.01	
		V_{CC} = Input port, V_L = Output Port C_{Load} = 0, f = 1 MHz, EN = GND (outputs disabled)	0.9	4.5	0.01	pF
			1.5	1.8	0.01	
			1.8	1.5	0.01	
			1.8	1.8	0.01	
			1.8	2.8	0.01	
			2.5	2.5	0.01	
			2.8	1.8	0.01	
			4.5	0.9	0.01	

18. V_{CC} is the supply voltage associated with the I/O V_{CC} port, and V_{CC} ranges from +0.9 V to 4.5 V under normal operating conditions.
19. V_L is the supply voltage associated with the I/O V_L port, and V_L ranges from +0.9 V to 4.5 V under normal operating conditions.
20. Typical values are at T_A = +25°C

DISCONTINUED
THIS DEVICE IS NOT RECOMMENDED FOR NEW DESIGN
PLEASE CONTACT YOUR onsemi
REPRESENTATIVE FOR INFORMATION

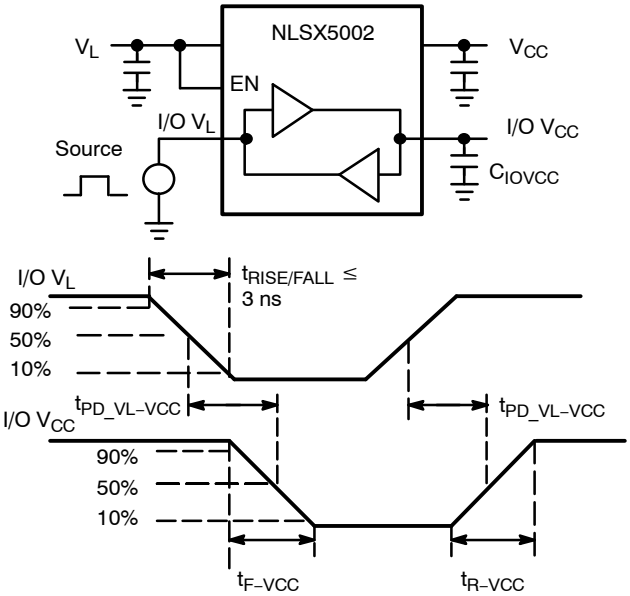

Figure 7. Driving I/O V_{CC} Test Circuit and Timing

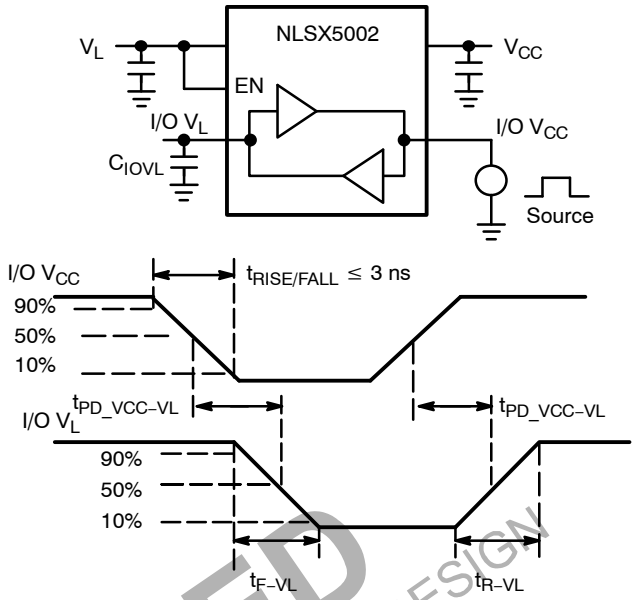

Figure 8. Driving I/O V_L Test Circuit and Timing

DISCONTINUED
THIS DEVICE IS NOT RECOMMENDED FOR NEW DESIGN
PLEASE CONTACT YOUR onsemi
REPRESENTATIVE FOR INFORMATION

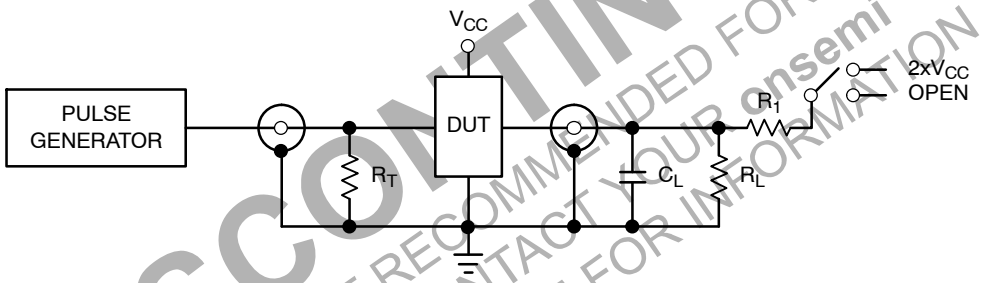

Test	Switch
t_{PZH}, t_{PHZ}	Open
t_{PZL}, t_{PLZ}	2 x V_{CC}

C_L = 15 pF or equivalent (Includes jig and probe capacitance)
R_L = R_1 = 50 kΩ or equivalent
R_T = Z_{OUT} of pulse generator (typically 50 Ω)

Figure 9. Test Circuit for Enable/Disable Time Measurement

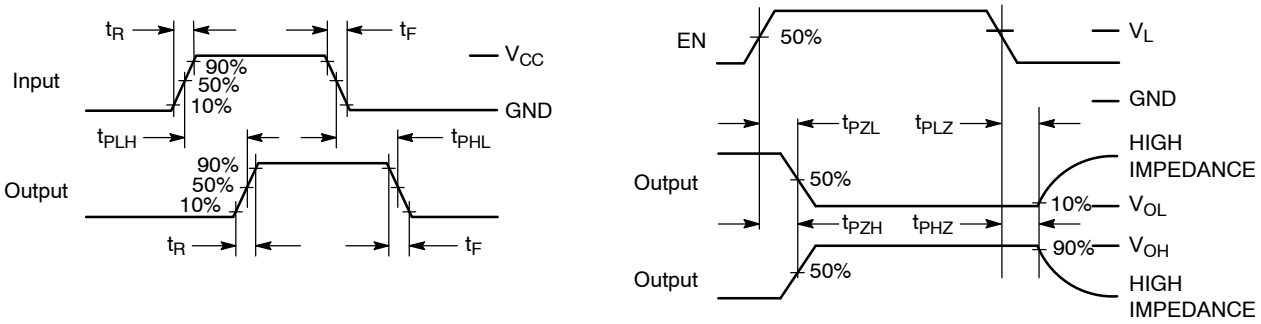

Figure 10. Timing Definitions for Propagation Delays and Enable/Disable Measurement

IMPORTANT APPLICATIONS INFORMATION

Level Translator Architecture

The NLSX5002 auto−sense translator provides bi−directional logic voltage level shifting to transfer data in multiple supply voltage systems. These level translators have two supply voltages, V_L and V_{CC}, which set the logic levels on the input and output sides of the translator. When used to transfer data from the I/O V_L to the I/O V_{CC} ports, input signals referenced to the V_L supply are translated to output signals with a logic level matched to V_{CC}. In a similar manner, the I/O V_{CC} to I/O V_L translation shifts input signals with a logic level compatible to V_{CC} to an output signal matched to V_L.

The NLSX5002 translator consists of bi−directional channels that independently determine the direction of the data flow without requiring a directional pin. One−shot circuits are used to detect the rising or falling input signals. In addition, the one−shots decrease the rise and fall times of the output signal for high−to−low and low−to−high transitions.

Input Driver Requirements

Auto−sense translators such as the NLSX5002 have a wide bandwidth, but a relatively small DC output current rating. The high bandwidth of the bi−directional I/O circuit is used to quickly transform from an input to an output driver and vice versa. The I/O ports have a modest DC current output specification so that the output driver can be over driven when data is sent in the opposite direction. For proper operation, the input driver to the auto−sense translator should be capable of driving 5 mA of peak output current. The bi−directional configuration of the translator results in both input stages being active for a very short time period. Although the peak current from the input signal circuit is relatively large, the average current is small and consistent with a standard CMOS input stage.

Enable Input (EN)

The NLSX5002 translator has an Enable pin (EN) that provides tri−state operation at the I/O pins. Driving the Enable pin to a low logic level minimizes the power consumption of the device and drives the I/O V_{CC} and I/O V_L pins to a high impedance state. Normal translation operation occurs when the EN pin is equal to a logic high signal. The EN pin is referenced to the V_L supply and has Over−Voltage Tolerant (OVT) protection.

Uni−Directional versus Bi−Directional Translation

The NLSX5002 translator can function as a non−inverting uni−directional translator. One advantage of using the translator as a uni−directional device is that each I/O pin can be configured as either an input or output. The configurable input or output feature is especially useful in applications such as SPI that use multiple uni−directional I/O lines to send data to and from a device. The flexible I/O port of the auto sense translator simplifies the trace connections on the PCB.

Power Supply Guidelines

The values of the V_L and V_{CC} supplies can be set to anywhere between 0.9 and 4.5 V. Design flexibility is maximized because V_L may be either greater than or less than the V_{CC} supply. In contrast, the majority of the competitive auto sense translators has a restriction that the value of the V_L supply must be equal to less than (V_{CC} − 0.4) V.

The sequencing of the power supplies will not damage the device during power−up operation. In addition, the I/O V_{CC} and I/O V_L pins are in the high impedance state if either supply voltage is equal to 0 V. For optimal performance, 0.01 to 0.1 μF decoupling capacitors should be used on the V_L and V_{CC} power supply pins. Ceramic capacitors are a good design choice to filter and bypass any noise signals on the voltage lines to the ground plane of the PCB. The noise immunity will be maximized by placing the capacitors as close as possible to the supply and ground pins, along with minimizing the PCB connection traces.

The NLSX5002 translators have a power down feature that provides design flexibility. The output ports are disabled when either power supply is off (V_L or V_{CC} = 0 V). This feature causes all of the I/O pins to be in the power saving high impedance state.

DISCONTINUED
THIS DEVICE IS NOT RECOMMENDED FOR NEW DESIGN
PLEASE CONTACT YOUR onsemi
REPRESENTATIVE FOR INFORMATION

UQFN8, 1.40x1.20, 0.40P
CASE 523AS
ISSUE B

SCALE 4:1

DATE 19 AUG 2021

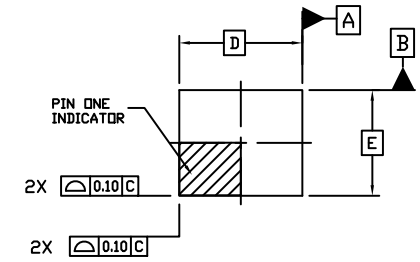

TOP VIEW

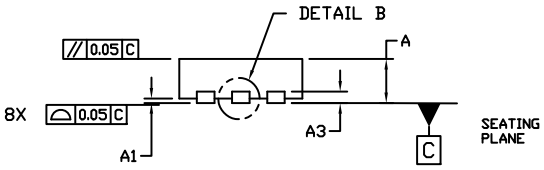

SIDE VIEW

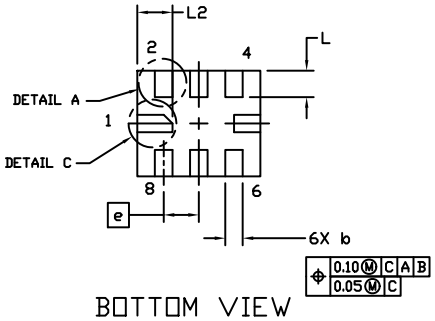

BOTTOM VIEW

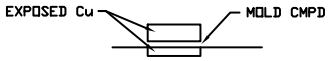

DETAIL B
ALTERNATE CONSTRUCTION

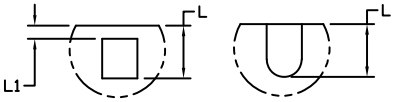

DETAIL A
ALTERNATE CONSTRUCTIONS

DETAIL C
ALTERNATE CONSTRUCTION

NOTE 4

NOTES:

1. DIMENSIONING AND TOLERANCING PER ASME Y14.5M, 1994.
2. CONTROLLING DIMENSION: MILLIMETERS
3. DIMENSION b APPLIES TO PLATED TERMINAL AND IS MEASURED BETWEEN 0.15 AND 0.25MM FROM THE TERMINAL TIP.
4. REFER TO SPECIFIC DEVICE DATA SHEET FOR PIN 1 NOTCH LOCATION.

	MILLIMETERS	
DIM	MIN.	MAX.
A	0.45	0.55
A1	0.00	0.05
A3	0.13 REF	
b	0.15	0.25
D	1.40 BSC	
E	1.20 BSC	
e	0.40 BSC	
L	0.20	0.40
L1	---	0.15
L2	0.30	0.50

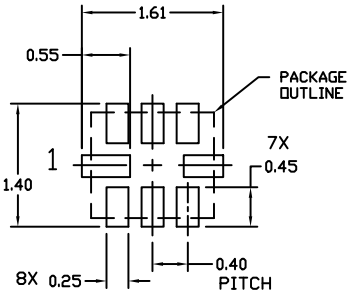

RECOMMENDED
MOUNTING FOOTPRINT ✱

✱ For additional information on our Pb-Free strategy and soldering details, please download the ON Semiconductor Soldering and Mounting Techniques Reference Manual, SOLDERRM/D.

GENERIC MARKING DIAGRAM*

XX = Specific Device Code
M = Date Code

*This information is generic. Please refer to device data sheet for actual part marking. Pb−Free indicator, “G” or microdot “▪”, may or may not be present. Some products may not follow the Generic Marking.

DOCUMENT NUMBER:	98AON58906E	Electronic versions are uncontrolled except when accessed directly from the Document Repository. Printed versions are uncontrolled except when stamped “CONTROLLED COPY” in red.
DESCRIPTION:	UQFN8, 1.40x1.20, 0.40P	PAGE 1 OF 1

onsemi and onsemi are trademarks of Semiconductor Components Industries, LLC dba **onsemi** or its subsidiaries in the United States and/or other countries. **onsemi** reserves the right to make changes without further notice to any products herein. **onsemi** makes no warranty, representation or guarantee regarding the suitability of its products for any particular purpose, nor does **onsemi** assume any liability arising out of the application or use of any product or circuit, and specifically disclaims any and all liability, including without limitation special, consequential or incidental damages. **onsemi** does not convey any license under its patent rights nor the rights of others.

onsemi, onsemi, and other names, marks, and brands are registered and/or common law trademarks of Semiconductor Components Industries, LLC dba "**onsemi**" or its affiliates and/or subsidiaries in the United States and/or other countries. **onsemi** owns the rights to a number of patents, trademarks, copyrights, trade secrets, and other intellectual property. A listing of **onsemi**'s product/patent coverage may be accessed at www.onsemi.com/site/pdf/Patent−Marking.pdf. **onsemi** reserves the right to make changes at any time to any products or information herein, without notice. The information herein is provided "as−is" and **onsemi** makes no warranty, representation or guarantee regarding the accuracy of the information, product features, availability, functionality, or suitability of its products for any particular purpose, nor does **onsemi** assume any liability arising out of the application or use of any product or circuit, and specifically disclaims any and all liability, including without limitation special, consequential or incidental damages. Buyer is responsible for its products and applications using **onsemi** products, including compliance with all laws, regulations and safety requirements or standards, regardless of any support or applications information provided by **onsemi**. "Typical" parameters which may be provided in **onsemi** data sheets and/or specifications can and do vary in different applications and actual performance may vary over time. All operating parameters, including "Typicals" must be validated for each customer application by customer's technical experts. **onsemi** does not convey any license under any of its intellectual property rights nor the rights of others. **onsemi** products are not designed, intended, or authorized for use as a critical component in life support systems or any FDA Class 3 medical devices or medical devices with a same or similar classification in a foreign jurisdiction or any devices intended for implantation in the human body. Should Buyer purchase or use **onsemi** products for any such unintended or unauthorized application, Buyer shall indemnify and hold **onsemi** and its officers, employees, subsidiaries, affiliates, and distributors harmless against all claims, costs, damages, and expenses, and reasonable attorney fees arising out of, directly or indirectly, any claim of personal injury or death associated with such unintended or unauthorized use, even if such claim alleges that **onsemi** was negligent regarding the design or manufacture of the part. **onsemi** is an Equal Opportunity/Affirmative Action Employer. This literature is subject to all applicable copyright laws and is not for resale in any manner.

ADDITIONAL INFORMATION

TECHNICAL PUBLICATIONS:
Technical Library: www.onsemi.com/design/resources/technical−documentation
onsemi Website: www.onsemi.com

ONLINE SUPPORT: www.onsemi.com/support
For additional information, please contact your local Sales Representative at
www.onsemi.com/support/sales