Schematic for the NCP5006 Demonstration Board

ON Semiconductor®
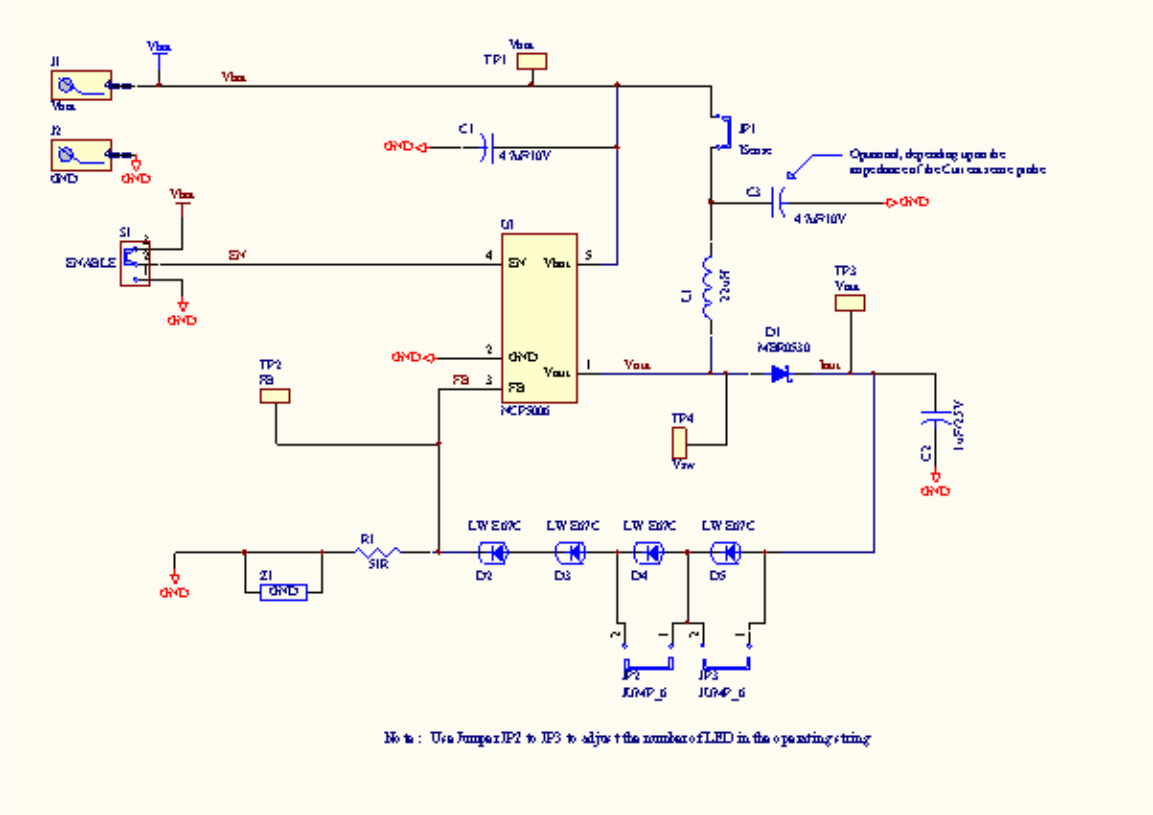
10/12/2004