Silicon Photomultiplier (SiPM) 4-Side Scaleable Arrays

ArrayC Series

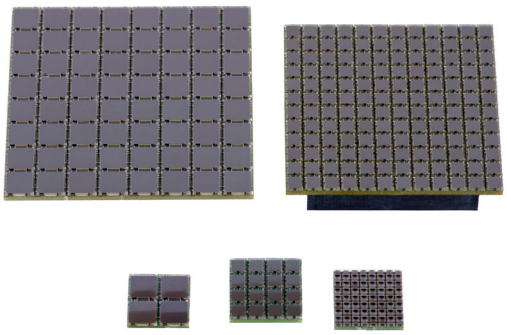

onsemi's range of C−Series, SMT (surface mount technology) SiPM sensors have been used to create compact and scaleable arrays. The sensors are mounted onto PCB boards with minimal dead space. The ArrayC products are available in a variety of formats, and formed of pixels of different sizes. Details of the arrays available are given in the **Ordering Information** table on page 29 of this document.

The back of each ArrayC has either one or more multi−way connectors, or a BGA (ball grid array), that allow access to the fast output* and *standard* I/O from each pixel in the array, and a *common* I/O from the summed substrates of the pixels. The ArrayC products with connectors can be used to interface with the user's own readout via the mating connector, or to **onsemi's** Breakout Boards (BOBs). The BOBs allow for easy access to the pixel signals and performance evaluation of the arrays.

ArrayC products with the BGA can be reflow soldered to the user's readout boards, or purchased ready−mounted on an Evaluation Board (EVB) for easy testing. The BGA ArrayC products cannot be removed from their EVBs. This contrasts with an ArrayC that has connectors, where multiple arrays can be evaluated with a single BOB.

ArrayC Inputs and Outputs (I/O)

Figure 1 summarizes the array schematic for a portion of an ArrayC. Each SiPM sensor in the array has three electrical connections: fast output*, standard output and common.

The substrates (cathodes) of all sensors are summed together to form the common I/O.

Each individual fast output* and standard I/O (anode) are routed to its own output pin.

The pixel−level performance of the sensors in the array can be found in the C−Series datasheet.

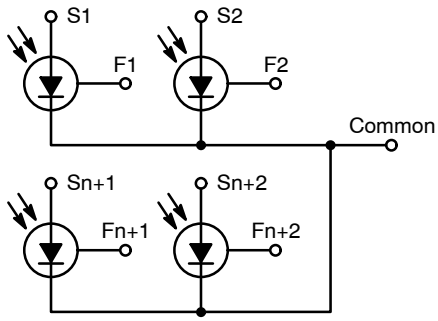

Figure 1. Signal connections at the pixel level of an ArrayC

ATTENTION!

Great care should be taken when disconnecting the ArrayC PCBs from the mating connectors, either on one of the BOBs, or the user's own boards.

The board should be gently levered up, working progressively around the board to lever the PCB from the connector a little on all sides, and then repeating the process until the connectors are free from each other.

Note that a BGA ArrayC cannot be removed from its EVB.

* The ARRAYC−60035−4P does not have access to the fast output.

© Semiconductor Components Industries, LLC, 2018

ARRAYC−60035−4P−BGA (2 x 2 ARRAY OF 6 mm SMT SENSORS)

Array Size	Sensor Type	Readout	Board Size	Pixel Pitch	No. Connections	No. Connectors
2 x 2	60035	Pixel	14.2 x 14.2 mm^2	7.2 mm	9	3 x 3 BGA

The ARRAYC−60035−4P is comprised of 4 individual 6mm C−Series sensors arranged in a 2 x 2 array.

The performance of the individual pixels and details of the bias to apply can be found in the C−Series datasheet.

Connections to each sensor are provided by a BGA (ball grid array). The BGA can be used to mount the array on the user's board using reflow soldering.

The 4 SiPM sensors have all substrate connections (cathodes) connected together to form a common I/O. The 3 x 3 BGA provides connections as follows:

- 4 x standard I/O
- 5 x common I/O
- There is NO fast output

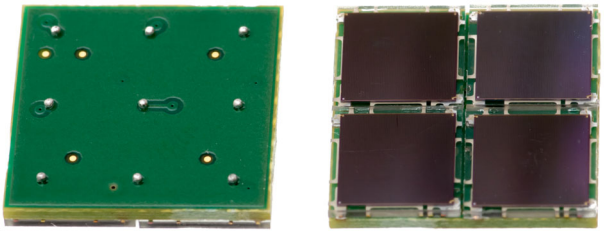

Schematics for the ARRAYC−60035−4P−BGA

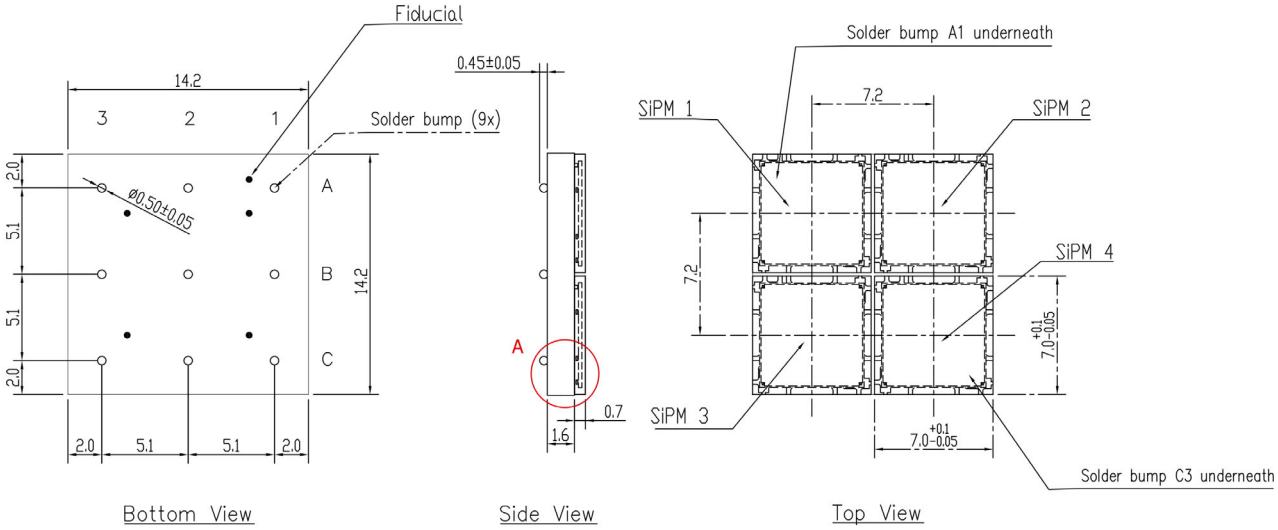

The complete ARRAYC−60035−4P−BGA CAD and solder footprint is available to download.

Share Feedback
Your Opinion Matters

BGA Connections for the ARRAYC−60035−4P−BGA

The fiducial is indicated in the image below. It marks the location of both pin A1 and pixel 1.

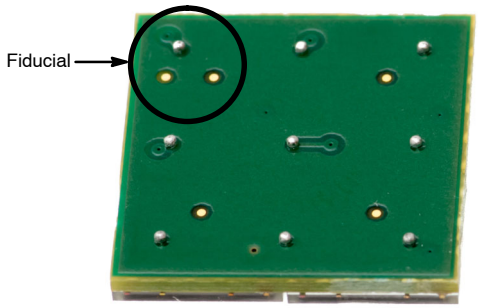

Pin. No	Function
A1	Anode 1
A2	Anode 2
A3	Common Cathode
B1	Anode 3
B2	Anode 4
B3	Common Cathode
C1	Common Cathode
C2	Common Cathode
C3	Common Cathode

ARRAYC−60035−4P−BGA − Solder Footprint and Reflow Solder Profile

The BGA package is compatible with standard reflow solder processes (J−STD−20) and so is ideal for high−volume manufacturing. The ARRAYC−60035−4P−BGA should be mounted according to specified soldering pad patterns, as given in of the CAD file.

Solder paste (we recommend using no−clean solder paste) must be evenly applied to each soldering pad to insure proper bonding and positioning of the array. After soldering, allow at least three minutes for the component to cool to room temperature before further operations.

Solder reflow conditions must be in compliance with J−STD−20, table 5.2. This is summarized in Figure 2. The number of passes should not be more than 2.

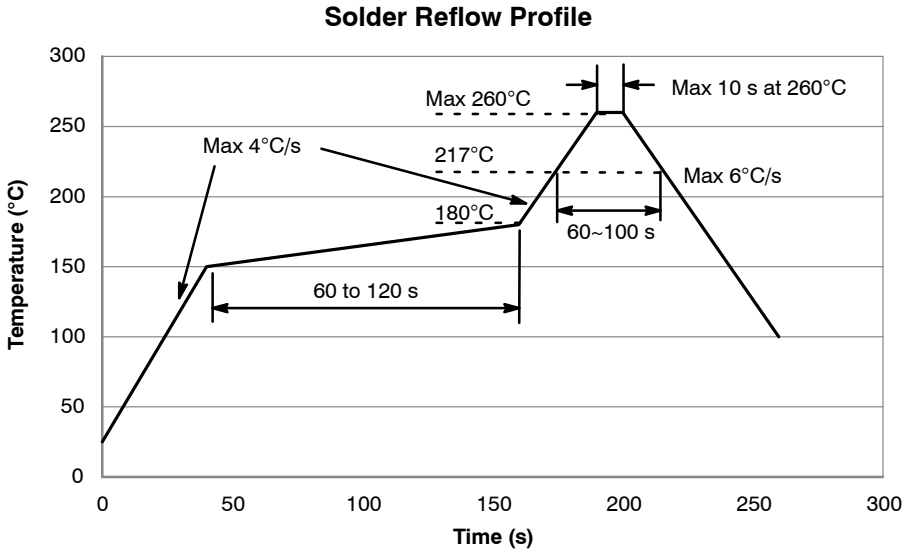

Figure 2. Solder reflow profile. Conditions must be in compliance with J−STD−20, table 5.2

Share Feedback
Your Opinion Matters

ARRAYC−60035−4P−GEVB
(ARRAYC−60035−4P−BGA Evaluation Board)

The ARRAYC−60035−4P−GEVB is an evaluation board allowing easy access to the signals of a ARRAYC−60035−4P−BGA via pins.

The ARRAYC−60035−4P−GEVB has the array on the front and pins on the back of the PCB. The pins are compatible with a standard 8−pin DIL socket for evaluation purposes. Alternatively, the pins can be directly soldered into through−holes in the user's readout PCB. Four of the pins are connected to the anodes of the individual pixels and the other four pins are connected to the common cathode. An example mating 8−pin DIL socket is the 110−93−308−41−001000 from Mill−Max.

The GEVB PCB is slightly smaller than the actual array, allowing for tiling.

The GEVB does NOT provide access to the fast output.

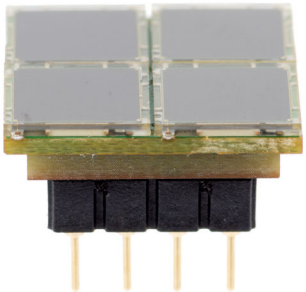

Pin. No	Function
1	Anode 1
2	Common Cathode
3	Anode 3
4	Common Cathode
5	Common Cathode
6	Anode 4
7	Common Cathode
8	Anode 2

Schematics for the ARRAYC−60035−4P−GEVB

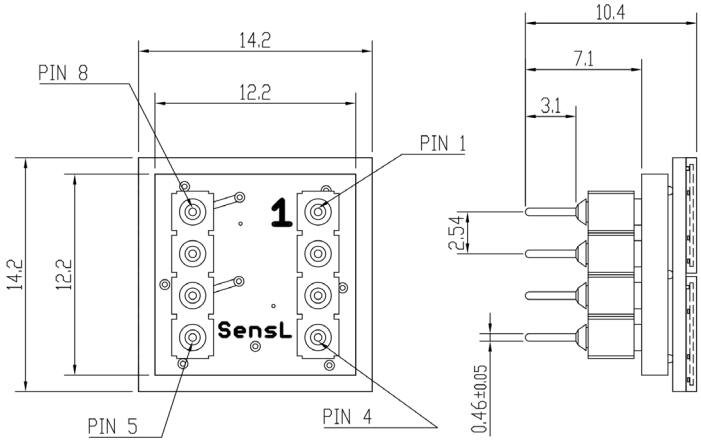

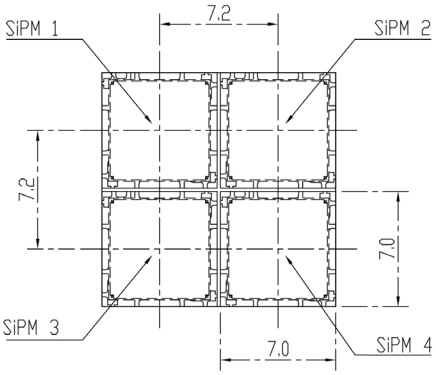

The complete ARRAYC−60035−4P−GEVB CAD and solder footprint is available to download.

Share Feedback
Your Opinion Matters

ARRAYC−60035−64P−PCB (8 x 8 ARRAY OF 6 mm SMT SENSORS)

Array Size	Sensor Type	Readout	Board Size	Pixel Pitch	No. Connections	No. Connectors
8 x 8	60035	Pixel	57.4 x 57.4 mm^2	7.2 mm	160	2 x 80−way

The ARRAYC−60035−64P is comprised of 64 individual 6mm SMT sensors arranged in a 8 x 8 array.

The performance of the individual pixels and details of the bias to apply can be found in the C−Series datasheet.

The connections to each array are provided by two **Samtec 80−way connectors, type QTE−040−03−F−D−A**. These connectors mate with the Samtec QSE−040−01−F−D−A board−to−board connector and the Samtec EQCD High Speed Cable Assemblies. The 64 SiPM pixels all have substrate connections (cathode) summed to form a common I/O. The 80−way connectors provide connections as follows:

- 64 x fast output
- 64 x standard I/O
- 32 x common I/O

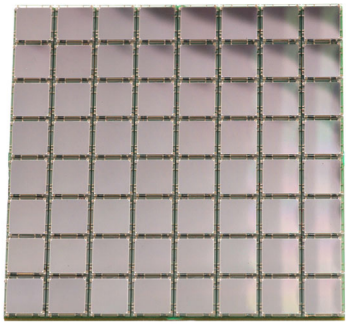

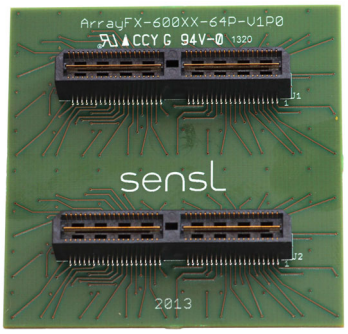

Schematics for the ARRAYC−60035−64P−PCB

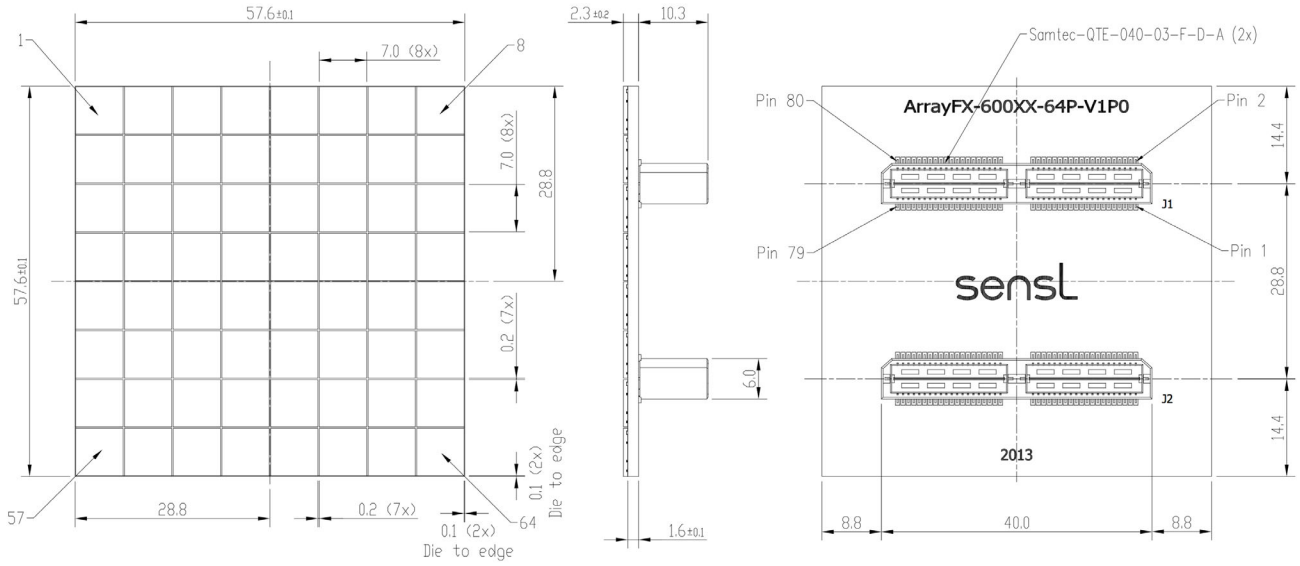

The complete ARRAYC−60035−64P−PCB CAD is available to download.

Share Feedback
Your Opinion Matters

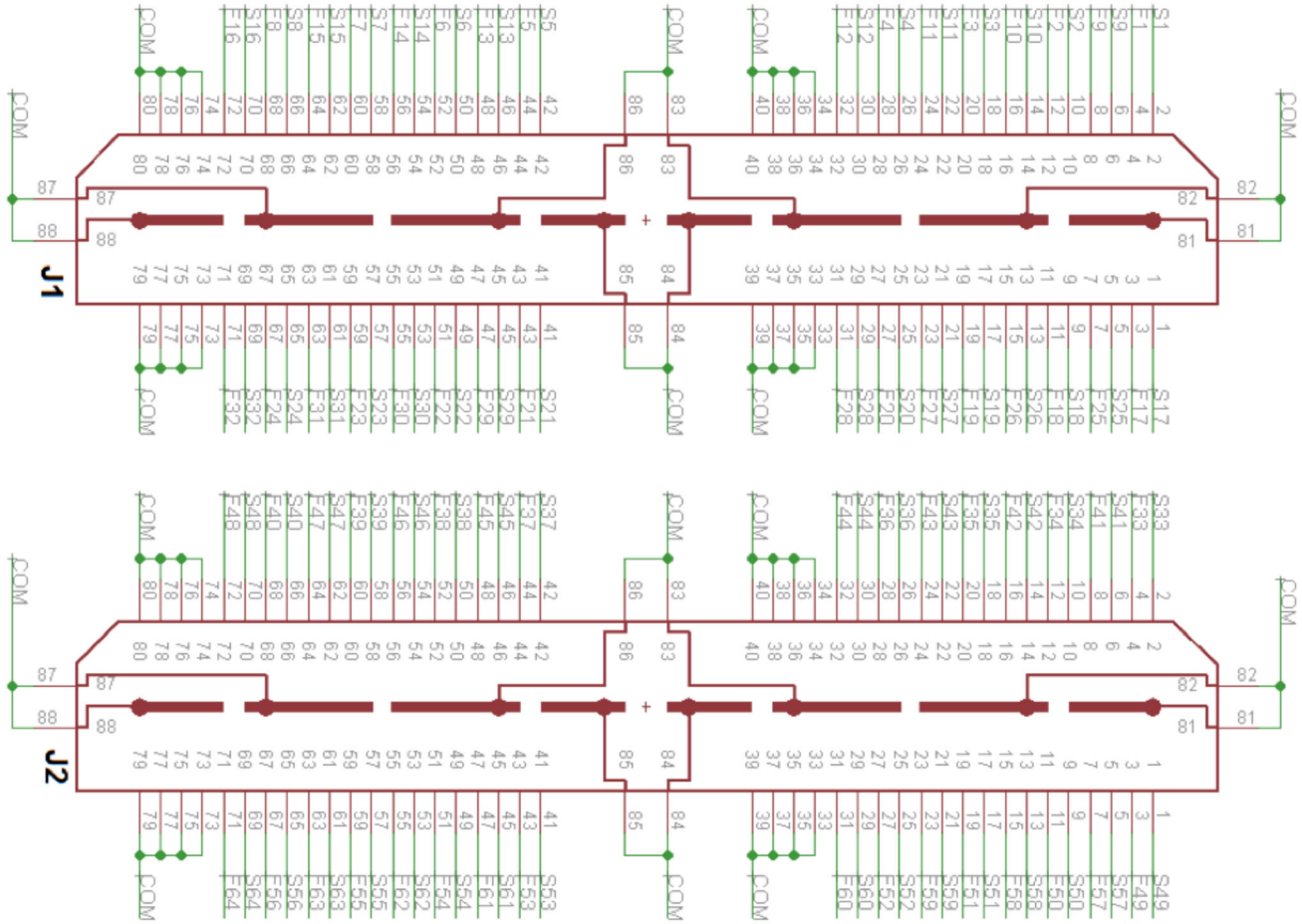

Figure 3. Connector schematic for the ARRAYC−60035−64P

Share Feedback
Your Opinion Matters

Table 1. Connector Pin−Outs for the ARRAYC−60035−64P−PCB

J1				J2			
PIN	SIGNAL	PIN	SIGNAL	PIN	SIGNAL	PIN	SIGNAL
1	S17	2	S1	1	S49	2	S33
3	F17	4	F1	3	F49	4	F33
5	S25	6	S9	5	S57	6	S41
7	F25	8	F9	7	F57	8	F41
9	S18	10	S2	9	S50	10	S34
11	F18	12	F2	11	F50	12	F34
13	S26	14	S10	13	S58	14	S42
15	F26	16	F10	15	F58	16	F42
17	S19	18	S3	17	S51	18	S35
19	F19	20	F3	19	F51	20	F35
21	S27	22	S11	21	S59	22	S43
23	F27	24	F11	23	F59	24	F43
25	S20	26	S4	25	S52	26	S36
27	F20	28	F4	27	F52	28	F36
29	S28	30	S12	29	S60	30	S44
31	F28	32	F12	31	F60	32	F44
33	CM	34	CM	33	CM	34	CM
35	CM	36	CM	35	CM	36	CM
37	CM	38	CM	37	CM	38	CM
39	CM	40	CM	39	CM	40	CM
41	S21	42	S5	41	S53	42	S37
43	F21	44	F5	43	F53	44	F37
45	S29	46	S13	45	S61	46	S45
47	F29	48	F13	47	F61	48	F45
49	S22	50	S6	49	S54	50	S38
51	F22	52	F6	51	F54	52	F38
53	S30	54	S14	53	S62	54	S46
55	F30	56	F14	55	F62	56	F46
57	S23	58	S7	57	S55	58	S39
59	F23	60	F7	59	F55	60	F39
61	S31	62	S15	61	S63	62	S47
63	F31	64	F15	63	F63	64	F47
65	S24	66	S8	65	S56	66	S40
67	F24	68	F8	67	F56	68	F40
69	S32	70	S16	69	S64	70	S48
71	F32	72	F16	71	F64	72	F48
73	CM	74	CM	73	CM	74	CM
75	CM	76	CM	75	CM	76	CM
77	CM	78	CM	77	CM	78	CM
79	CM	80	CM	79	CM	80	CM

CM	Common I/O
Sn	Standard I/O of pixel n
Fn	Fast output of pixel n

Share Feedback
Your Opinion Matters

ARRAYX−BOB6−64P
(ARRAYC−60035−64P Breakout Board)

The ARRAYX−BOB6−64P is an evaluation board allowing easy access to all the signals of a **onsemi** ARRAYC−60035−64P, 6 mm 8 x 8 SiPM array.

The Breakout Board features two Samtec 80−way connectors, type QSE−040−01−F−D−A. These connectors mate with the Samtec QTE−040−03−F−D−A board−to−board connector on the array. Since the connectors are keyed, orientating the array on the BOB is straightforward.

All signals on the array are routed via the mating connectors to header pins. These pins are formed of four 50−way (25 x 2 row) 2.54 mm pitch headers; J3, J4, J5 and J6. Each of the four headers also has 8 pins left unconnected to allow prototyping for evaluation purposes. The layout of the board can be seen in Figure 4.

The three SMA connectors on the board can be connected via the supplied jumper cable to any of the array header pins and used for accessing signals or suppling bias voltage. Four 7 mm holes are aligned on a 25 mm grid to allow mounting of the board on an optical breadboard.

See Appendices A and B for examples of Breakout Board usage.

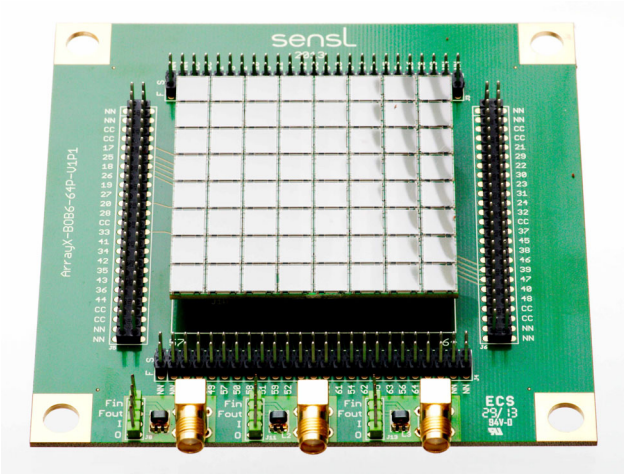

Schematics for the ARRAYC−60035−4P−EVB

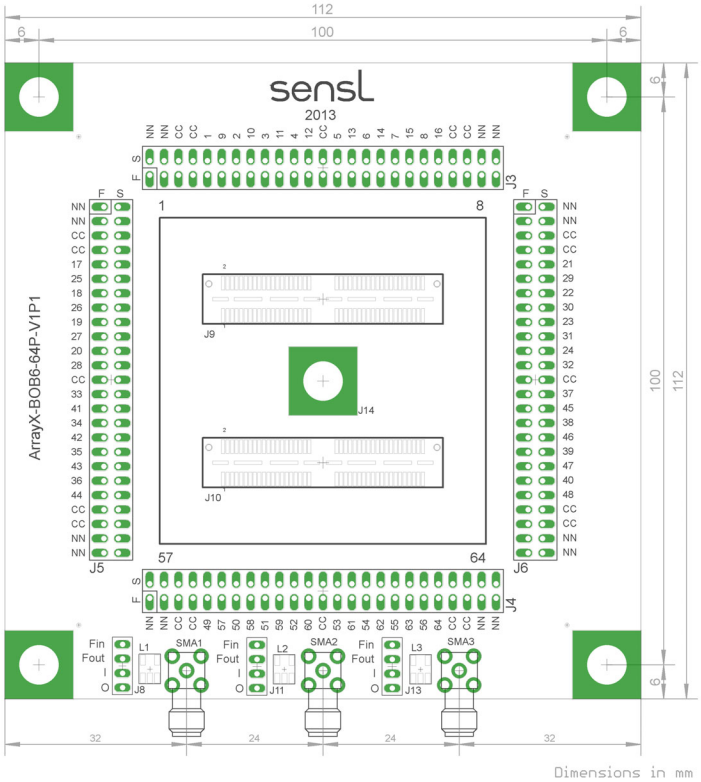

Figure 4. Layout of the ARRAYX−BOB6−64P. The dimensions of the board are 112 mm x 112 mm

Share Feedback
Your Opinion Matters

Table 2. HEADER SIGNALS ON THE ARRAYX−BOB6−64P

Pin		J3		J4		J5		J6	
1	2	NC	NC	NC	NC	NC	NC	NC	NC
3	4	NC	NC	NC	NC	NC	NC	NC	NC
5	6	CM	CM	CM	CM	CM	CM	CM	CM
7	8	CM	CM	CM	CM	CM	CM	CM	CM
9	10	F1	S1	F49	S49	F17	S17	F21	S21
11	12	F9	S9	F57	S57	F25	S25	F29	S29
13	14	F2	S2	F50	S50	F18	S18	F22	S22
15	16	F10	S10	F58	S58	F26	S26	F30	S30
17	18	F3	S3	F51	S51	F19	S19	F23	S23
19	20	F11	S11	F59	S59	F27	S27	F31	S31
21	22	F4	S4	F52	S52	F20	S20	F24	S24
23	24	F12	S12	F60	S60	F28	S28	F32	S32
25	26	CM	CM	CM	CM	CM	CM	CM	CM
27	28	F5	S5	F53	S53	F33	S33	F37	S37
29	30	F13	S13	F61	S61	F41	S41	F45	S45
31	32	F6	S6	F54	S54	F34	S34	F38	S38
33	34	F14	S14	F62	S62	F42	S42	F46	S46
35	36	F7	S7	F55	S55	F35	S35	F39	S39
37	38	F15	S15	F63	S63	F43	S43	F47	S47
39	40	F8	S8	F56	S56	F36	S36	F40	S40
41	42	F16	S16	F64	S64	F44	S44	F48	S48
43	44	CM	CM	CM	CM	CM	CM	CM	CM
45	46	CM	CM	CM	CM	CM	CM	CM	CM
47	48	NC	NC	NC	NC	NC	NC	NC	NC
49	50	NC	NC	NC	NC	NC	NC	NC	NC

NC	Not Connected
CM	Common I/O
Sn	Standard I/O of pixel n
Fn	Fast output of pixel n

Share Feedback
Your Opinion Matters

ARRAYX−BOB6−64S (Summed Breakout Board for the ARRAYC−60035−64P)

The ARRAYX−BOB6−64S is an evaluation board allowing easy access to the sum of all of standard pixel signals of a **onsemi** ARRAYC−60035−64P, 6 mm 8x 8 SiPM array, in addition to all of the individual fast output signals. The Breakout Board features two Samtec 80−way connectors, type QSE−040−01−F−D−A. These connectors mate with the Samtec QTE−040−03−F−D−A board−to−board connector on the array. Since the connectors are keyed, orientating the array on the BOB is straightforward. A schematic of the board is shown in Figure 5 below.

Fast signals: All of the fast output signals (Fn) from the array are routed via the mating connectors to header pins. These pins are formed of four 50−way (25 x 2 row) 2.54 mm pitch headers; J3, J4, J5 and J6. Each of the four headers also has 10 pins that connect to the common cathode (CM) and 8 pins left unconnected (NC) to allow prototyping for evaluation purposes.

Two SMA connectors and Balun transformers are provided with 4−pin headers to allow any fast signal to be connected directly to the SMA or via the transformer using jumper wires.

Summed output: A summed output (the anodes of pixels 1 to 64 connected together) is routed to jumper pins (SM) in close proximity to a third SMA connector. Four 7 mm holes are placed on a 25 mm grid to allow mounting of the board on an optical breadboard.

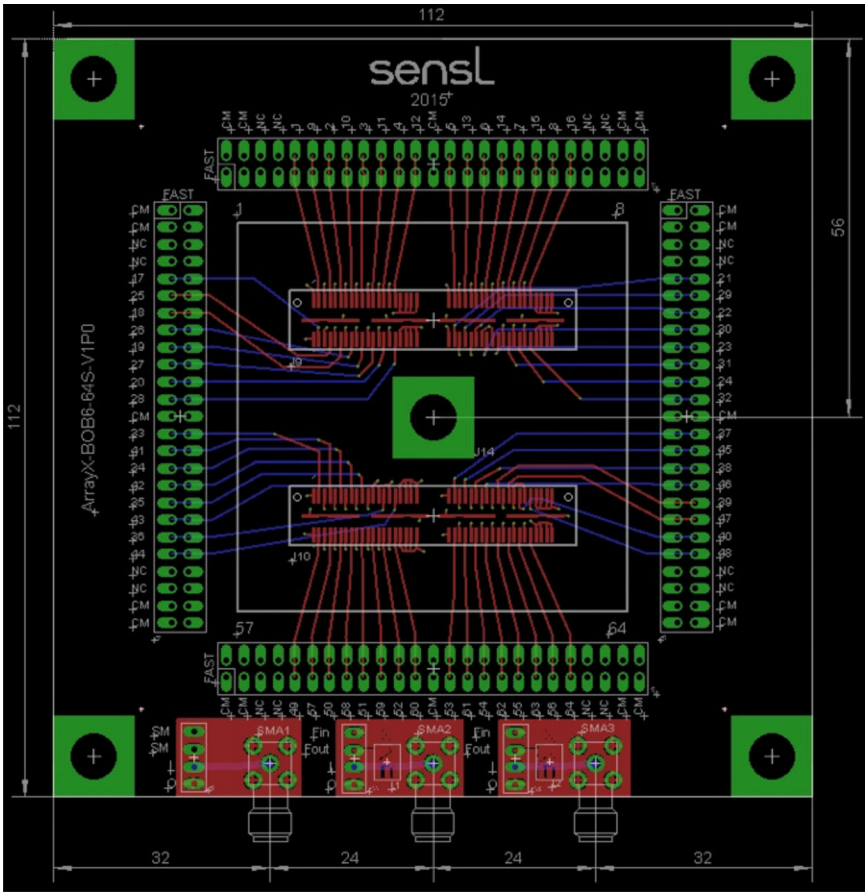

Figure 5. Layout of the ARRAYX−BOB6−64S. The dimensions of the board are 112 mm x 112 mm

Share Feedback
Your Opinion Matters

Table 3. HEADER SIGNALS ON THE ARRAYX−BOB6−64S

Pin		J3		J4		J5		J6	
1	2	CM	CM	CM	CM	CM	CM	CM	CM
3	4	CM	CM	CM	CM	CM	CM	CM	CM
5	6	NC	NC	NC	NC	NC	NC	NC	NC
7	8	NC	NC	NC	NC	NC	NC	NC	NC
9	10	F1	F1	F49	F49	F17	F17	F21	F21
11	12	F9	F9	F57	F57	F25	F25	F29	F29
13	14	F2	F2	F50	F50	F18	F18	F22	F22
15	16	F10	F10	F58	F58	F26	F26	F30	F30
17	18	F3	F3	F51	F51	F19	F19	F23	F23
19	20	F11	F11	F59	F59	F27	F27	F31	F31
21	22	F4	F4	F52	F52	F20	F20	F24	F24
23	24	F12	F12	F60	F60	F28	F28	F32	F32
25	26	CM	CM	CM	CM	CM	CM	CM	CM
27	28	F5	F5	F53	F53	F33	F33	F37	F37
29	30	F13	F13	F61	F61	F41	F41	F45	F45
31	32	F6	F6	F54	F54	F34	F34	F38	F38
33	34	F14	F14	F62	F62	F42	F42	F46	F46
35	36	F7	F7	F55	F55	F35	F35	F39	F39
37	38	F15	F15	F63	F63	F43	F43	F47	F47
39	40	F8	F8	F56	F56	F36	F36	F40	F40
41	42	F16	F16	F64	F64	F44	F44	F48	F48
43	44	NC	NC	NC	NC	NC	NC	NC	NC
45	46	NC	NC	NC	NC	NC	NC	NC	NC
47	48	CM	CM	CM	CM	CM	CM	CM	CM
49	50	CM	CM	CM	CM	CM	CM	CM	CM

NC	Not Connected
CM	Common I/O
Fn	Fast output of pixel n

Share Feedback
Your Opinion Matters

ARRAYC−30035−16P−PCB (4 x 4 ARRAY OF 3 mm SMT SENSORS)

Array Size	Sensor Type	Readout	Board Size	Pixel Pitch	No. Connections	No. Connectors
4 x 4	30035	Pixel	16.6 x 16.6 mm^2	4.2 mm	40	1 x 40−way

The ARRAYC−30035−16P−PCB is comprised of 16 individual 3 mm C−Series sensors arranged in a 4 x 4 array.

The performance of the individual pixels and details of the bias to apply can be found in the C−Series datasheet.

Connections to each sensor are provided by a 40−way Hirose plug−type board−to−board connector DF17(2.0)−40DP−0.5V(57). These connectors mate with the Hirose DF17(3.0)−40DS−0.5V(57). The 16 SiPM pixels have all substrates (cathodes) connected together to form a common I/O. The 40−way connector provides connections as follows:

- 16 x fast output
- 16 x standard I/O
- 8 x common I/O

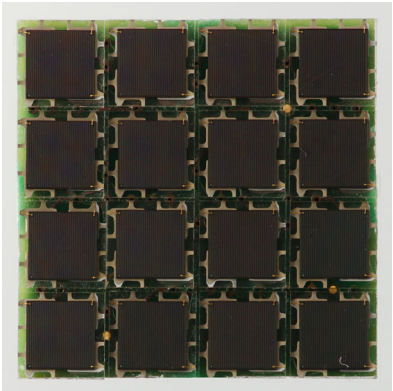

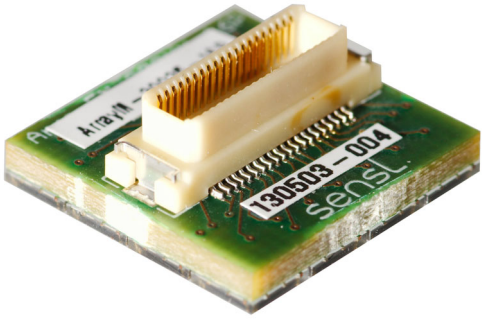

Schematics for the ARRAYC−30035−16P−PCB

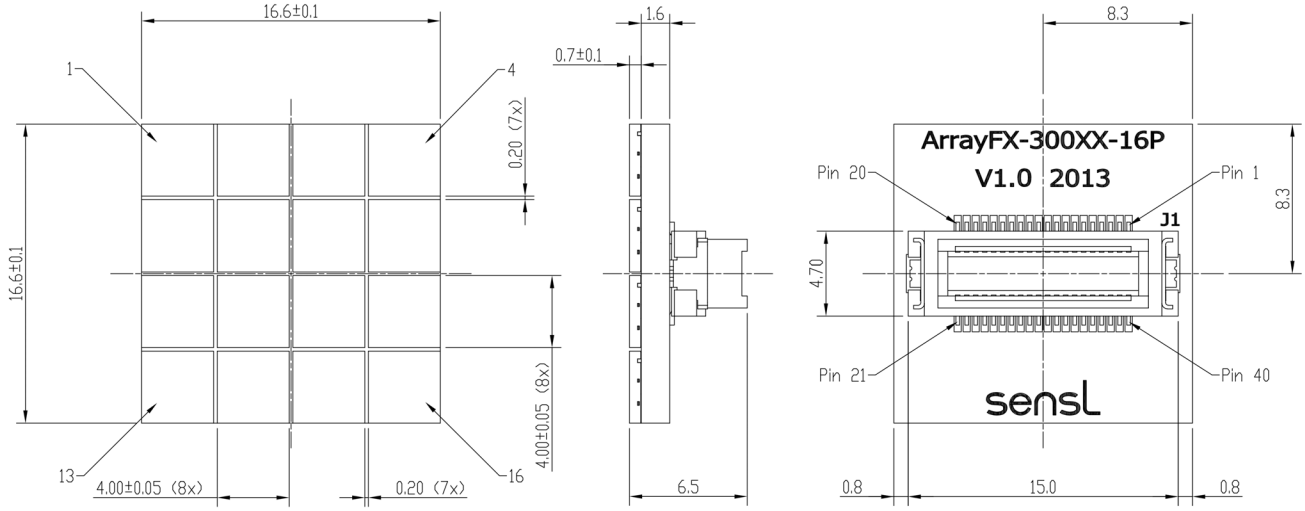

The complete ARRAYC−30035−16P−PCB CAD is available to download.

Share Feedback
Your Opinion Matters

Connector Pin−Outs for the ARRAYC−30035−16P−PCB

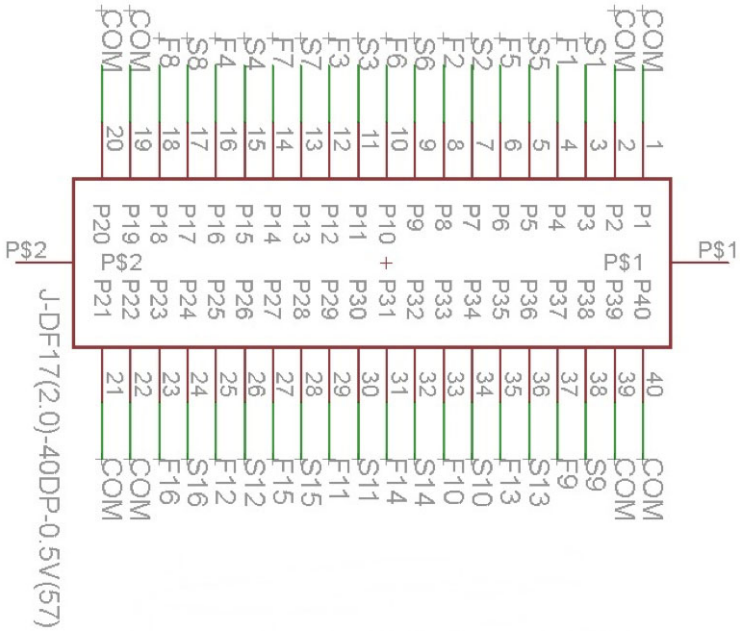

Figure 6. Connector schematic for the ARRAYC−30035−16P

PIN	SIGNAL	PIN	SIGNAL
1	CM	40	CM
2	CM	39	CM
3	S1	38	S9
4	F1	37	F9
5	S5	36	S13
6	F5	35	F13
7	S2	34	S10
8	F2	33	F10
9	S6	32	S14
10	F6	31	F14
11	S3	30	S11
12	F3	29	F11
13	S7	28	S15
14	F7	27	F15
15	S4	26	S12
16	F4	25	F12
17	S8	24	S16
18	F8	23	F16
19	CM	22	CM
20	CM	21	CM

CM	Common I/O
Sn	Standard I/O of pixel n
Fn	Fast output of pixel n

Share Feedback
Your Opinion Matters

ARRAYX−BOB3−16P
(ARRAYC−30035−16P Breakout Board)

The ARRAYX−BOB3−16P is an evaluation board allowing easy access to the signals from a **onsemi** ARRAYC−30035−16P, 3 mm 4 x 4 SiPM array. See Figure 7 for details on orientating the array correctly on the BOB.

The Breakout Board has a centrally located Hirose 40−way connector DF17(2.0)−40DS−0.5V(57). This connector mates with the Hirose DF17(2.0)−40DP−0.5V(57) board−to−board connector on the ARRAYC−30035−16P. All signals on the ARRAY are routed via the mating connector to header pins. These pins are formed by two 20−way (10 x 2 row) 2.54 mm pitch headers; J2 and J3.

Three SMA connectors and Balun transformers are provided with 4−pin headers to allow any signal to be connected directly to the SMA or via the transformer using jumper wires. Four 7 mm holes are aligned on a 25 mm grid to allow mounting of the board on an optical breadboard.

See Appendices A and B for examples of Breakout Board usage.

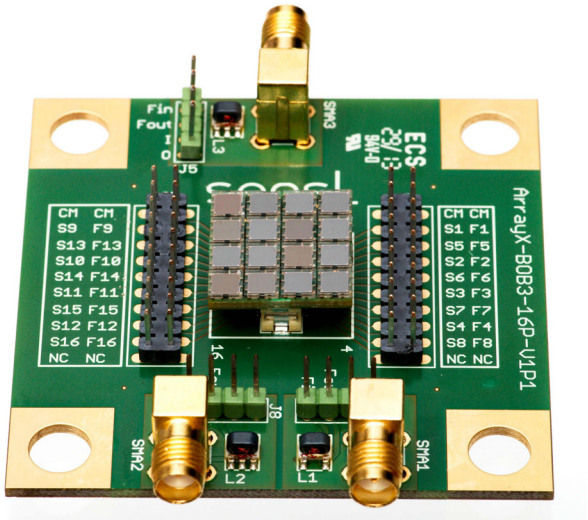

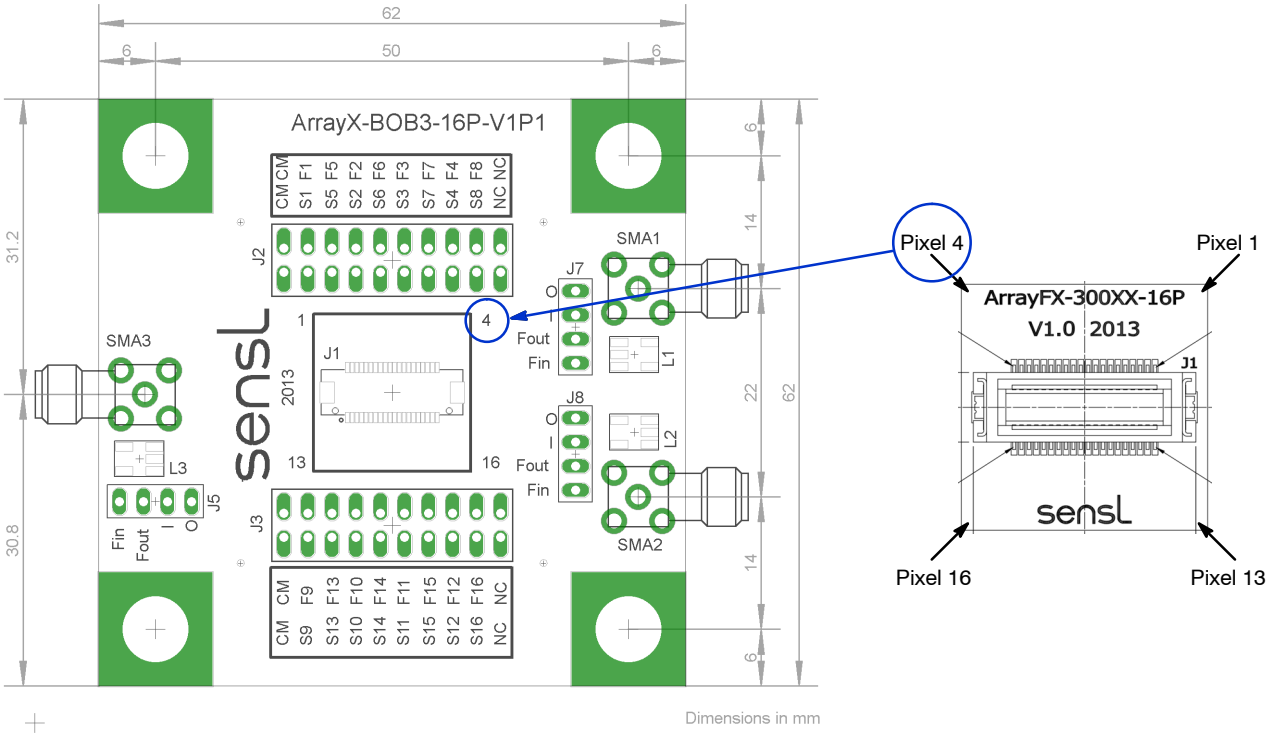

Figure 7. Layout of the ArrayX−BOB3−16P (left). The board dimensions are 62 mm x 62 mm. The underside of the ArrayC−30035−16P is also shown (right). The pixel numbering is shown, and can be matched the pixel numbers that are marked on the BOB, as indicated. This allows for the correct orientation of the array on the BOB

Share Feedback
Your Opinion Matters

Header Signals for the ARRAYX−BOB3−16P

PIN		J2		J3	
1	2	CM	CM	CM	CM
3	4	S1	F1	S9	F9
5	6	S5	F5	S13	F13
7	8	S2	F2	S10	F10
9	10	S6	F6	S14	F14
11	12	S3	F3	S11	F11
13	14	S7	F17	S15	F15
15	16	S4	F4	S12	F12
17	18	S8	F6	S16	F16
19	20	NC	NC	NC	NC

NC	Not Connected
CM	Common I/O
Sn	Standard I/O of pixel n
Fn	Fast output of pixel n

Share Feedback
Your Opinion Matters

ARRAYX−BOB3−16S (Summed Breakout Board for the ARRAYC−30035−16P)

The ARRAYX−BOB3−16S is an evaluation board allowing easy access to the sum of all of standard pixel signals of a **onsemi** ARRAYC−30035−16P, 3 mm 4 x 4 SiPM array, in addition to all of the individual fast output signals. The Summed Breakout Board has a centrally located Hirose 40−way connector DF17(2.0)−40DS−0.5V(57). This connector mates with the Hirose DF17(2.0)− 40DP−0.5V(57) board−to−board connector on the ARRAYC−30035−16P. See Figure 7 in the previous section for information on orientating the array on the BOB. A schematic of the board is shown in Figure 8 below.

Fast signals: All of the fast output signals (Fn) from the array are routed via the mating connectors to header pins. These pins are formed by two 20−way (10 x 2 row) 2.54 mm pitch headers; J2 and J3. Each of the headers also has 2 pins that connect to the common cathode (CM) and 2 pins left unconnected (NC) to allow prototyping for evaluation purposes.

Two SMA connectors and Balun transformers are provided with 4−pin headers to allow any fast signal to be connected directly to the SMA or via the transformer using jumper wires.

Summed output: A summed output (the anodes of pixels 1 to 16 connected together) is routed to jumper pins (SM) in close proximity to a third SMA connector. Four 7 mm holes are placed on a 25 mm grid to allow mounting of the board on an optical breadboard.

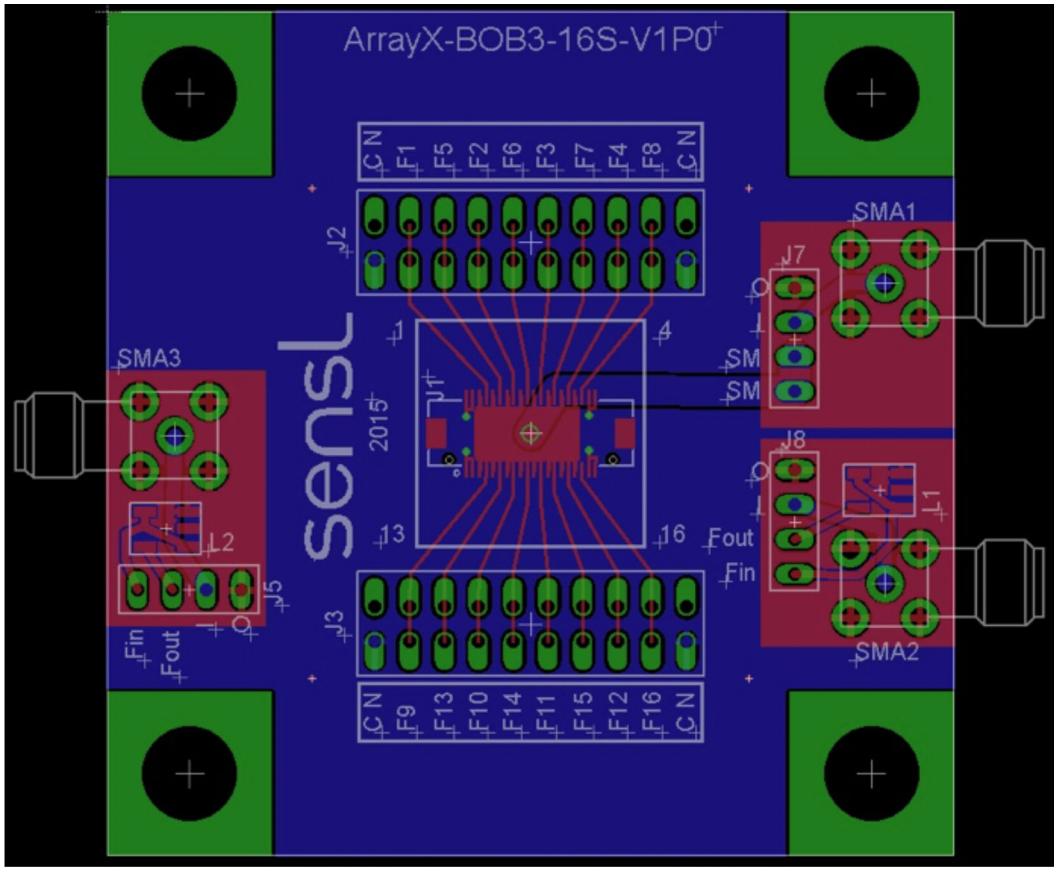

Figure 8. Layout of the ARRAYX−BOB3−16S. The board dimensions are 62 mm x 62 mm

Share Feedback
Your Opinion Matters

Header Signals for the ARRAYX−BOB3−16S

PIN		J2		J3	
1	2	CM	NC	CM	NC
3	4	F1	F1	F9	F9
5	6	F5	F5	F13	F13
7	8	F2	F2	F10	F10
9	10	F6	F6	F14	F14
11	12	F3	F3	F11	F11
13	14	F7	F7	F15	F15
15	16	F4	F4	F12	F12
17	18	F8	F8	F16	F16
19	20	CM	NC	CM	NC

NC	Not Connected
CM	Common I/O
Sn	Standard I/O of pixel n
Fn	Fast output of pixel n

Share Feedback
Your Opinion Matters

ARRAYC−30035−144P−PCB (12 x 12 ARRAY OF 3 mm SMT SENSORS)

Array Size	Sensor Type	Readout	Board Size	Pixel Pitch	No. Connections	No. Connectors
12 x 12	30035	Pixel	50.2 x 50.2 mm^2	4.2 mm	320	4 x 80−way

The ARRAYC−30035−144P is comprised of 144 individual 3 mm C−Series sensors arranged in a 12 x 12 array.

The performance of the individual pixels and details of the bias to apply can be found in the C−Series datasheet.

Connections to each sensor are provided by four Samtec 80−way connectors, type QTE−040−03−F−D−A. These connectors mate with the Samtec QSE−040−01−F−D−A board−to−board connector and the Samtec EQCD High Speed Cable Assemblies. The 144 SiPM sensors have all substrate connections (cathodes) connected together to form a common I/O. The 80−way connectors provide connections as follows:

- 144 x fast output
- 144 x standard I/O
- 32 x common I/O

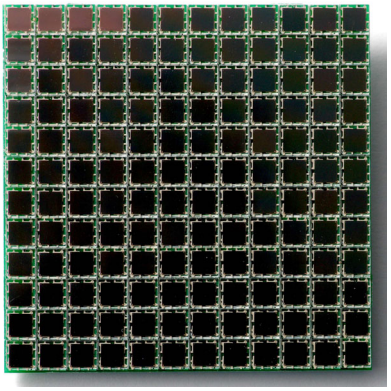

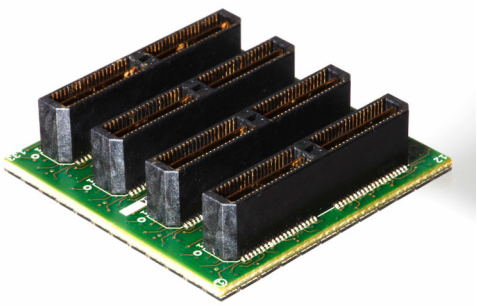

Schematics for the ARRAYC−30035−144P−PCB

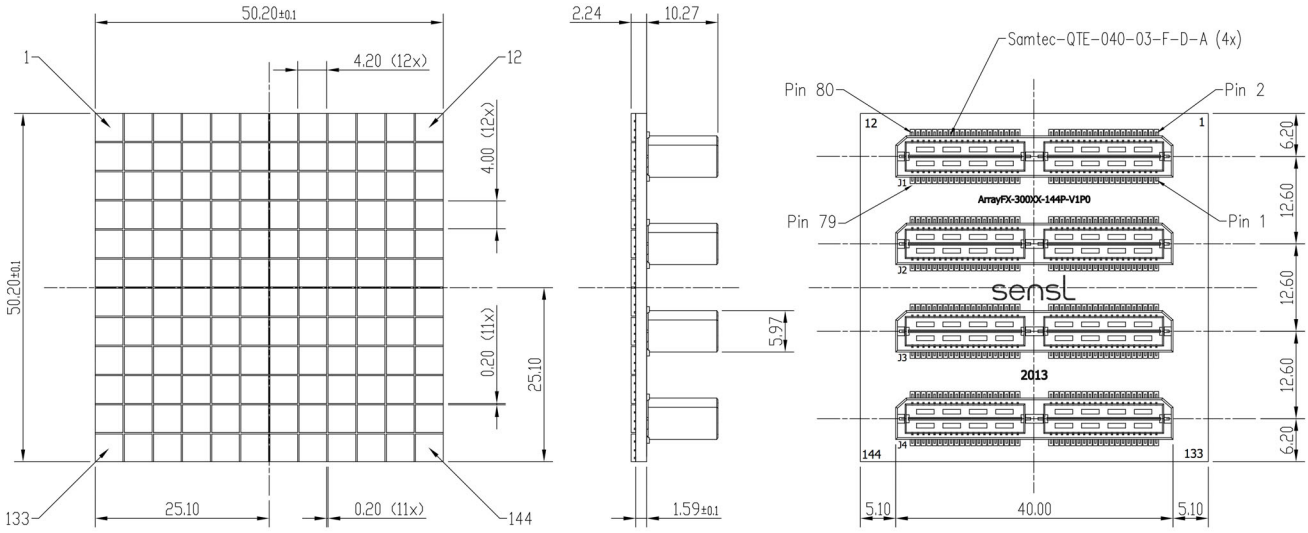

The complete ARRAYC−30035−144P−PCB CAD is available to download.

Share Feedback
Your Opinion Matters

Connector Schematics for the ARRAYC−30035−144P

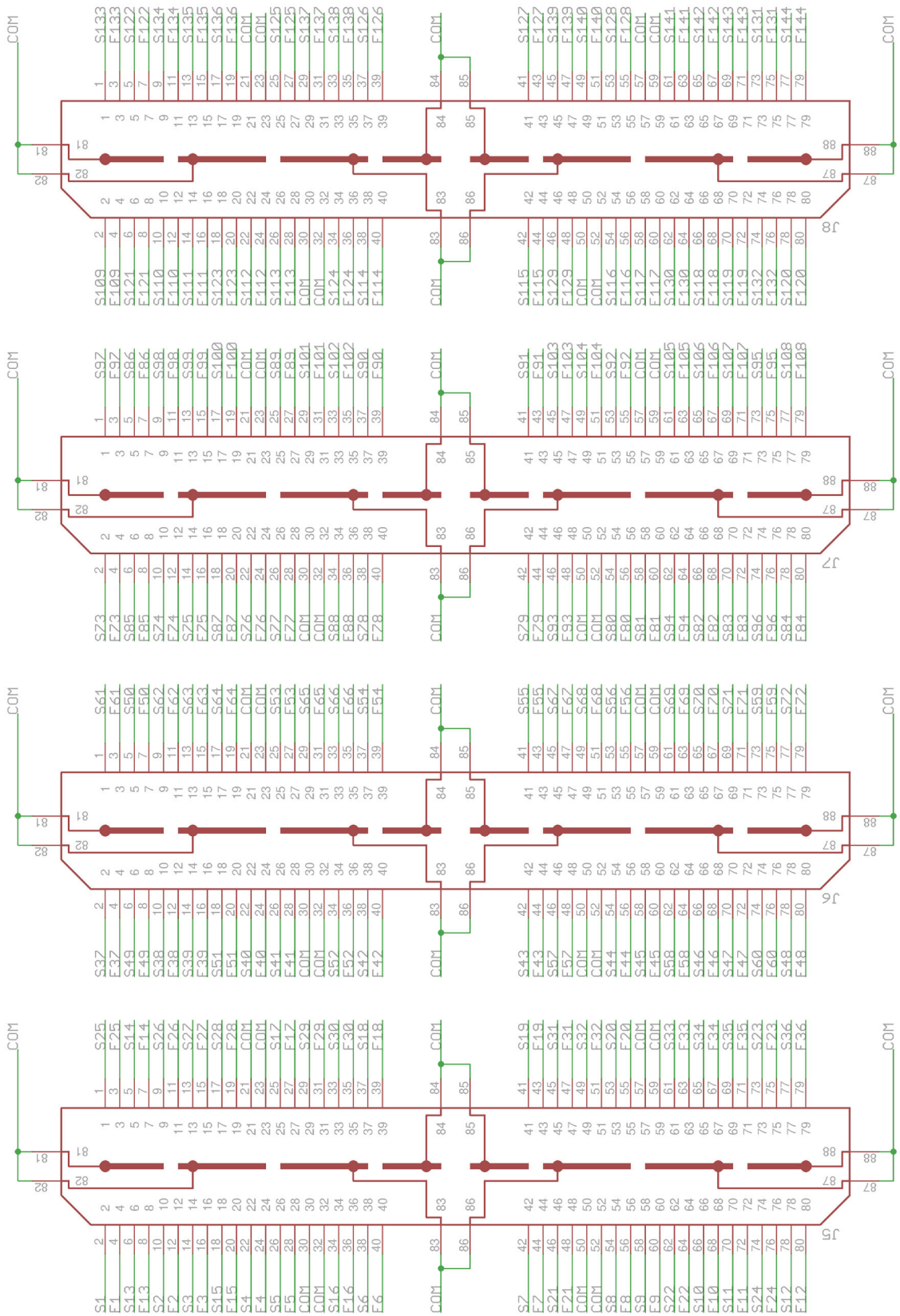

Figure 9. Connector pin−outs for the ARRAYC−30035−144P

Share Feedback
Your Opinion Matters

Table 4. Connector Pin−Outs for the ARRAYC−30035−144P

J1				J2			
PIN	SIGNAL	PIN	SIGNAL	PIN	SIGNAL	PIN	SIGNAL
1	S25	2	S1	1	S61	2	S37
3	F25	4	F1	3	F61	4	F37
5	S14	6	S13	5	S50	6	S49
7	F14	8	F13	7	F50	8	F49
9	S26	10	S2	9	S62	10	S38
11	F26	12	F2	11	F62	12	F38
13	S27	14	S3	13	S63	14	S39
15	F27	16	F3	15	F63	16	F39
17	S28	18	S15	17	S64	18	S51
19	F28	20	F15	19	F64	20	F51
21	CM	22	S4	21	CM	22	S40
23	CM	24	F4	23	CM	24	F40
25	S17	26	S5	25	S53	26	S41
27	F17	28	F5	27	F53	28	F41
29	S29	30	CM	29	S65	30	CM
31	F29	32	CM	31	F65	32	CM
33	S30	34	S16	33	S66	34	S52
35	F30	36	F16	35	F66	36	F52
37	S18	38	S6	37	S54	38	S42
39	F18	40	F6	39	F54	40	F42
41	S19	42	S7	41	S55	42	S43
43	F19	44	F7	43	F55	44	F43
45	S31	46	S21	45	S67	46	S57
47	F31	48	F21	47	F67	48	F57
49	S32	50	CM	49	S68	50	CM
51	F32	52	CM	51	F68	52	CM
53	S20	54	S8	53	S56	54	S44
55	F20	56	F8	55	F56	56	F44
57	CM	58	S9	57	CM	58	S45
59	CM	60	F9	59	CM	60	F45
61	S33	62	S22	61	S69	62	S58
63	F33	64	F22	63	F69	64	F58
65	S34	66	S10	65	S70	66	S46
67	F34	68	F10	67	F70	68	F46
69	S35	70	S11	69	S71	70	S47
71	F35	72	F11	71	F71	72	F47
73	S23	74	S24	73	S59	74	S60
75	F23	76	F24	75	F59	76	F60
77	S36	78	S12	77	S72	78	S48
79	F36	80	F12	79	F72	80	F48

Share Feedback
Your Opinion Matters

ArrayC Series

J3				J4			
PIN	SIGNAL	PIN	SIGNAL	PIN	SIGNAL	PIN	SIGNAL
1	S97	2	S73	1	S133	2	S109
3	F97	4	F73	3	F133	4	F109
5	S86	6	S85	5	S122	6	S121
7	F86	8	F85	7	F122	8	F121
9	S98	10	S74	9	S134	10	S110
11	F98	12	F74	11	F134	12	F110
13	S99	14	S75	13	S135	14	S111
15	F99	16	F75	15	F135	16	F111
17	S100	18	S87	17	S136	18	S123
19	F100	20	F87	19	F136	20	F123
21	CM	22	S76	21	CM	22	S112
23	CM	24	F76	23	CM	24	F112
25	S89	26	S77	25	S125	26	S113
27	F89	28	F77	27	F125	28	F113
29	S101	30	CM	29	S137	30	CM
31	F101	32	CM	31	F137	32	CM
33	S102	34	S88	33	S138	34	S124
35	F102	36	F88	35	F138	36	F124
37	S90	38	S78	37	S126	38	S114
39	F90	40	F78	39	F126	40	F114
41	S91	42	S79	41	S127	42	S115
43	F91	44	F79	43	F127	44	F115
45	S103	46	S93	45	S139	46	S129
47	F103	48	F93	47	F139	48	F129
49	S104	50	CM	49	S140	50	CM
51	F104	52	CM	51	F140	52	CM
53	S92	54	S80	53	S128	54	S116
55	F92	56	F80	55	F128	56	F116
57	CM	58	S81	57	CM	58	S117
59	CM	60	F81	59	CM	60	F117
61	S105	62	S94	61	S141	62	S130
63	F105	64	F94	63	F141	64	F130
65	S106	66	S82	65	S142	66	S118
67	F106	68	F82	67	F142	68	F118
69	S107	70	S83	69	S143	70	S119
71	F107	72	F83	71	F143	72	F119
73	S95	74	S96	73	S131	74	S132
75	F95	76	F96	75	F131	76	F132
77	S108	78	S84	77	S144	78	S120
79	F108	80	F84	79	F144	80	F120

NC	Not Connected
CM	Common I/O
Sn	Standard I/O of pixel n
Fn	Fast output of pixel n

Share Feedback
Your Opinion Matters

ARRAYX−BOB3−144P
(ARRAYC−30035−144P Breakout Board)

The ARRAYX−BOB3−144P is an evaluation board allowing easy access to the signals from a **onsemi** ARRAYC−30035−144P, 3 mm 12 x 12 SiPM array.

The Breakout Board is comprised of four Samtec 80−way connectors, type QSE−040−01−F−D−A. These connectors mate with the Samtec QTE−040−03−FD− A board−to−board connector on the array. Since the connectors are keyed, orientating the array on the BOB is straightforward.

All signals on the array are routed via the mating connectors to header pins. These pins are formed by eight 50−way (25 x 2 row) 2.54 mm pitch headers.

Three SMA connectors and Balun transformers are provided with 4−pin headers to allow any signal to be connected directly to the SMA or via the transformer using jumper wires. Four 7 mm holes are placed on a 25 mm grid to allow mounting of the board on an optical breadboard. The layout of the board is shown in Figure 10.

See Appendices A and B for examples of Breakout Board usage.

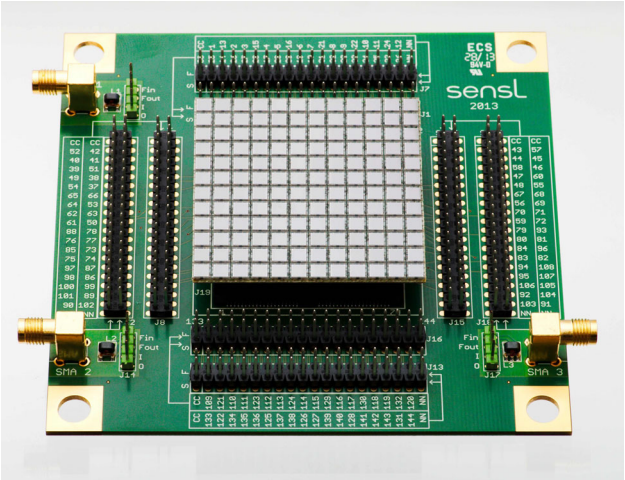

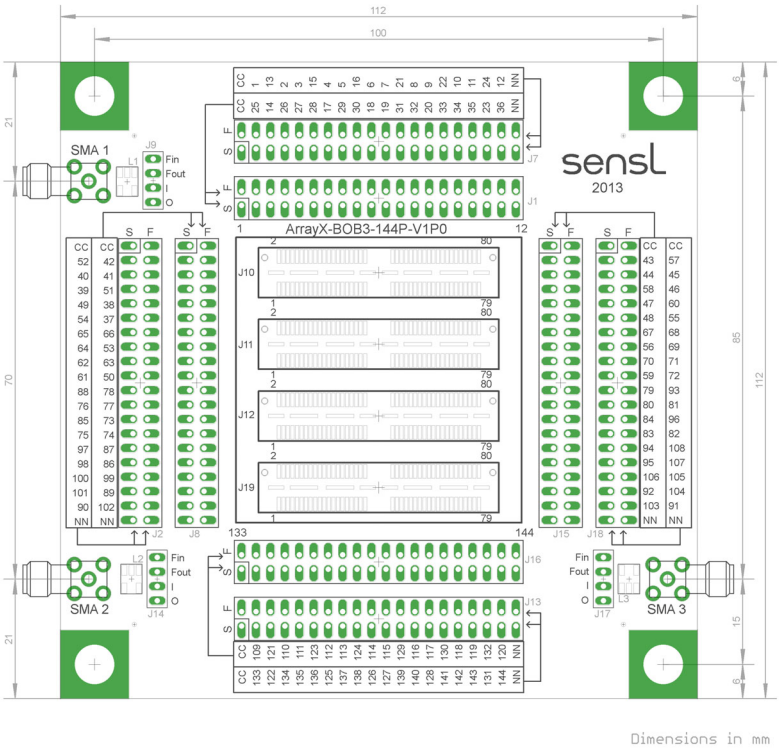

Figure 10. Layout of the ARRAYX−BOB3−144P. The board dimensions are 112 mm x 112 mm

Share Feedback
Your Opinion Matters

Table 5. HEADER SIGNALS ON THE ARRAYX−BOB3−144P

Pin		J1		J2		J7		J8	
1	2	CM	CM	CM	CM	CM	CM	CM	CM
3	4	S25	F25	S52	F52	S1	F1	S42	F42
5	6	S14	F14	S40	F40	S13	F13	S41	F41
7	8	S26	F26	S39	F39	S2	F2	S51	F51
9	10	S27	F27	S49	F49	S3	F3	S38	F38
11	12	S28	F28	S54	F54	S15	F15	S37	F37
13	14	S17	F17	S65	F65	S4	F4	S66	F66
15	16	S29	F29	S64	F64	S5	F5	S53	F53
17	18	S30	F30	S62	F62	S16	F16	S63	F63
19	20	S18	F18	S61	F61	S6	F6	S50	F50
21	22	S19	F19	S88	F88	S7	F7	S78	F78
23	24	S31	F31	S76	F76	S21	F21	S77	F77
25	26	S32	F32	S85	F85	S8	F8	S73	F73
27	28	S20	F20	S75	F75	S9	F9	S74	F74
29	30	S33	F33	S97	F97	S22	F22	S87	F87
31	32	S34	F34	S98	F98	S10	F10	S86	F86
33	34	S35	F35	S100	F100	S11	F11	S99	F99
35	36	S23	F23	S101	F101	S24	F24	S89	F89
37	38	S36	F36	S90	F90	S12	F12	S102	F102
39	40	NC	NC	NC	NC	NC	NC	NC	NC
Pin		**J13**		**J15**		**J16**		**J18**	
1	2	CM	CM	CM	CM	CM	CM	CM	CM
3	4	S133	F133	S43	F43	S109	F109	S57	F57
5	6	S122	F122	S44	F44	S121	F121	S45	F45
7	8	S134	F134	S58	F58	S110	F110	S46	F46
9	10	S135	F135	S47	F47	S111	F111	S60	F60
11	12	S136	F136	S48	F48	S123	F123	S55	F55
13	14	S125	F125	S67	F67	S112	F112	S68	F68
15	16	S137	F137	S56	F56	S113	F113	S69	F69
17	18	S138	F138	S70	F70	S124	F124	S71	F71
19	20	S126	F126	S59	F59	S114	F114	S72	F72
21	22	S127	F127	S79	F79	S115	F115	S93	F93
23	24	S139	F139	S80	F80	S129	F129	S81	F81
25	26	S140	F140	S84	F84	S116	F116	S96	F96
27	28	S128	F128	S83	F83	S117	F117	S82	F82
29	30	S141	F141	S94	F94	S130	F130	S108	F108
31	32	S142	F142	S95	F95	S118	F118	S107	F107
33	34	S143	F143	S106	F106	S119	F119	S105	F105
35	36	S131	F131	S92	F92	S132	F132	S104	F104
37	38	S144	F144	S103	F103	S120	F120	S91	F91
39	40	NC	NC	NC	NC	NC	NC	NC	NC

NC	Not Connected
CM	Common I/O
Sn	Standard I/O of pixel n
Fn	Fast output of pixel n

Share Feedback
Your Opinion Matters

Biasing and Readout from the Standard Breakout Boards

The purpose of the Breakout Boards is to allow easy access to either standard or fast I/O from individual pixels for testing purposes. It should be stressed that the breakout boards are for evaluation purposes only and do not allow for full readout of all pixels simultaneously.

The various Breakout Boards described in this document have features in common. All pixel fast and standard signals are brought out to headers. The header pins can be interfaced with the SMA connectors with the option of routing the signal via a balun transformer. The common I/O consists of all of the substrate connections summed together. It is not recommended to apply the bias to the common I/O.

The Breakout Boards are each shipped with 3 x shunt jumpers and 6 x 10 cm wire cables (3 x red, 3 x black) with crimp sockets at each end.

All header pins are suitable for use with wire wrapping in addition to the jumpers and crimp socket leads supplied.

The ‘NC’ signals are unconnected pins that can be used for prototyping.

SMA Connector

Each Breakout Board has three SMA connectors that can be used for supplying bias voltage and accessing signals. In addition, each SMA has a balun transformer in close proximity for impedance matching of the fast signals, shown in Figure 13. To interface signals from the array to the SMA connectors, there is a 4−pin header, shown in Figures 11 and 12. The pins are labelled; **Fin**, **Fout**, **I** (Inner) and **O** (Outer).

- **Fin** provides the input to the balun transformer.
- **Fout** is the output of the balun transformer.
- **I** provides direct connection to the inner part of the SMA connector.
- **O** provides direct connection to the outer part of the SMA connector.

Balun Transformer

The Balun transformer (RFMD RFXF9503) allows impedance matching of the fast output signal to the readout electronics. For a customer considering their own design, the Balun is not required if the readout amplifiers are placed in close proximity to the sensor pixels of the array.

For optimized timing performance, the impedance matching and signal propagation from the SiPM sensor to the readout electronics must be carefully considered.

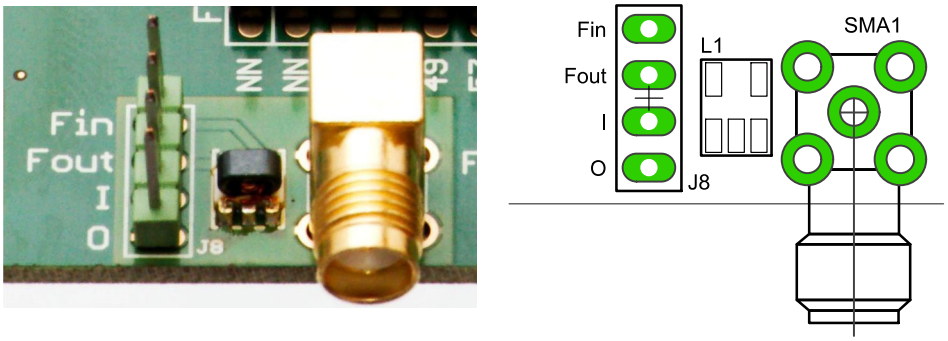

Figure 11. (right) photo and (left) schematic of the BOB SMA, balun transformer and 4−pin header arrangement.

Share Feedback
Your Opinion Matters

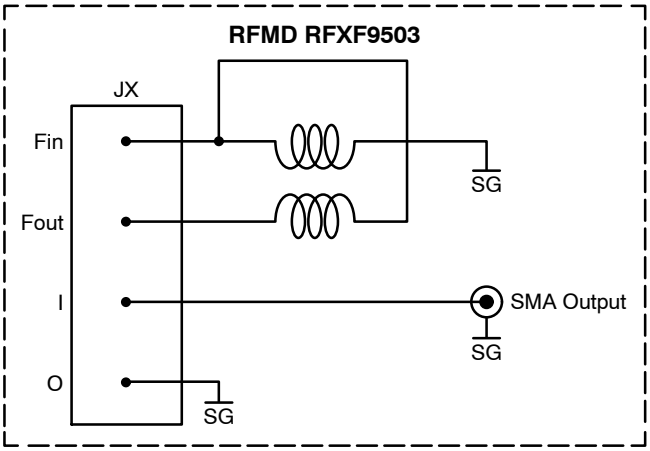

SG = Local signal ground
Each SMT/Balun/4 Way Header circuits has its own local signal ground

Figure 12. Schematic of the 4−pin header and balun transformer

EMI Considerations

It has been shown that the EMI (Electromagnetic Interference) can be picked up on the unshielded wires on the BOB. It is recommended that customers who experience excessive EMI seek to reduce the EMI in their lab, ideally at the EMI source. If this is not possible then improved shielding should be used. In all cases, testing of the SiPM sensor should be performed in total darkness.

For a system design, it is recommended that the customer consider shielding of all lines. The readout requirements for a SiPM are similar to that of a PMT and similar care should be taken with both sensor types. In comparison to an APD which has significantly lower gain than a SiPM, the SiPM will provide much improved resistance to EMI due to the higher gain of the SiPM sensor.

Share Feedback
Your Opinion Matters

APPENDIX A – EXAMPLE OF USING THE BREAKOUT BOARD TO READOUT FAST SIGNALS

The Figure 13 shows the ARRAYX−BOB6−64P set up for readout of fast signals from pixel 49

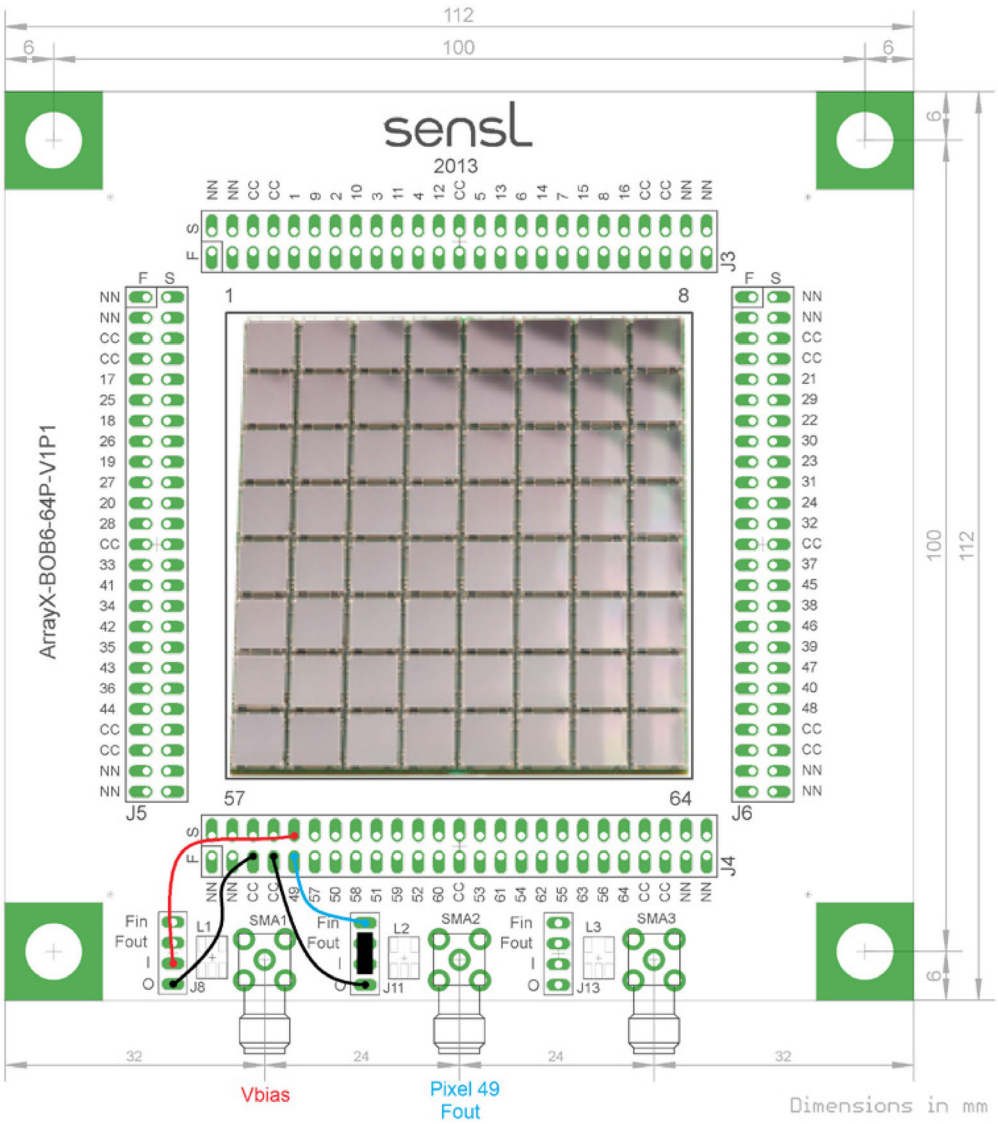

Figure 13. Example of an ARRAYC−60035−64P connected to an ARRAYX−BOB6−64P for the readout of the fast signal from pixel 49.

Here, SMA1 is used for supplying Vbias and SMA2 for reading out the fast output from pixel 49. In this example an ARRAYC−60035−64P is assumed and so the “S” (standard I/O) is the anode.

To bias the array, the inner (“I”) of SMA1 is connected to the S49 header pin. The cathode is common to all pixels and is connected via a “C” pin on the header to the outer (“O”) of SMA1. Refer to Figure 1 for signal connections for the C−Series array. Vbias is then applied to SMA1, which for an ArrayC sensors has a negative polarity with respect to the common cathode.

To access the fast output from pixel 49, the F49 header pin is then connected to the Fin of SMA2. This is the input to the balun transformer for impedance matching of the fast signals. Fout (the output of the balun transformer) is then connected via a shunt jumper to the inner (“I”) of SMA2, with the outer (“O”) again connected to the common cathode (“C”). The schematic of the balun transformer is shown in Figure 12. The fast output from SMA2 will need amplification if the signal amplitudes are small.

Share Feedback
Your Opinion Matters

APPENDIX B – EXAMPLE OF USING THE BREAKOUT BOARD TO READOUT STANDARD SIGNALS

The Figure 14 shows the ARRAYX−BOB6−64P set up for readout of standard signals (anode−cathode) from pixel 49.

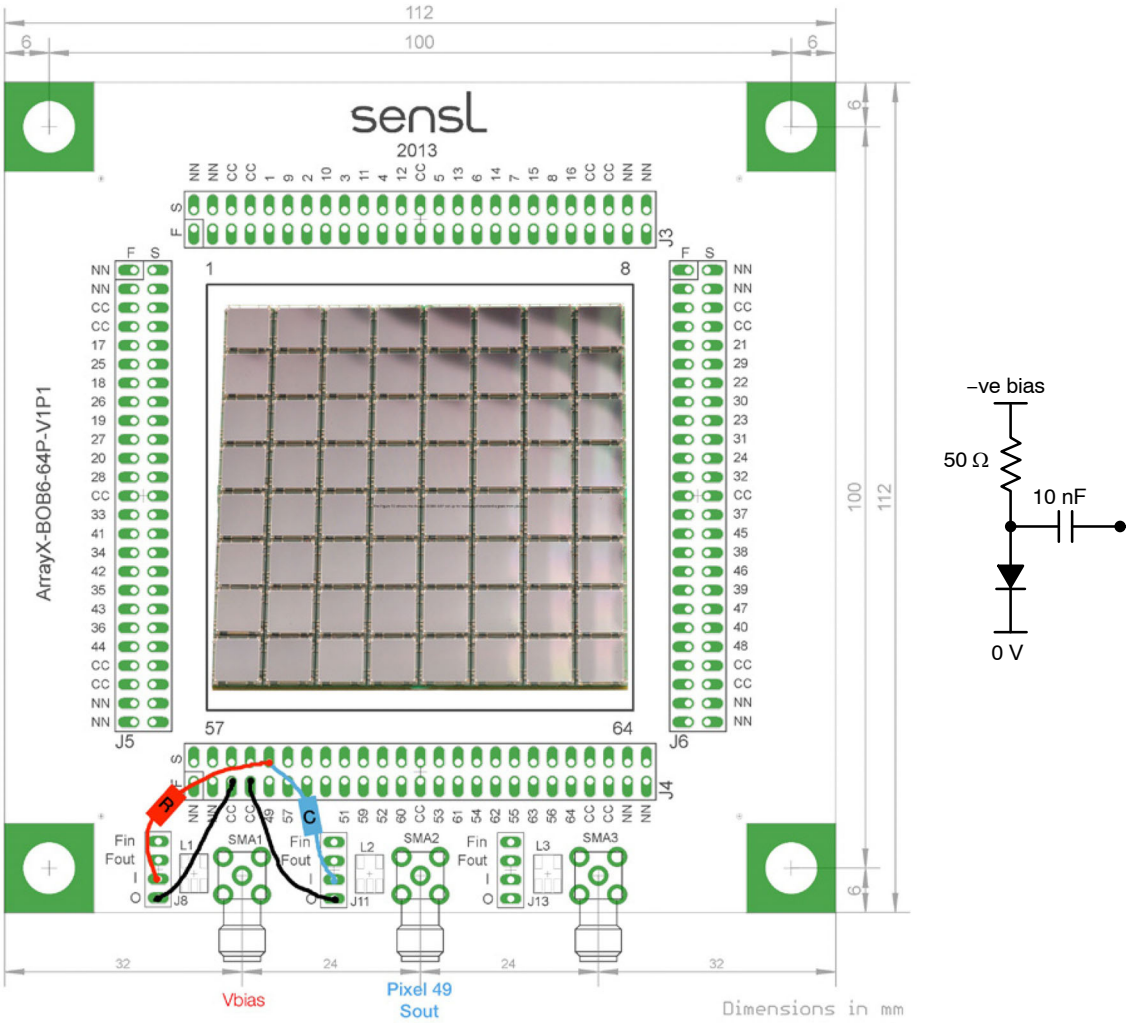

Figure 14. Example of an ARRAYC−60035−64P connected to an ARRAYX−BOB6−64P for the readout of the standard (anode−cathode) signal from pixel 49 (left), with simplified readout schematic (right).

Here, SMA 1 is used for supplying Vbias and SMA2 for reading out the standard output from pixel 49. In this example an ARRAYC−60035−64P is assumed and so the “S” (standard I/O) is the anode.

To bias the array, the inner (“I”) of SMA1 is connected to the S49 (anode) header pin via a load resistor of 50 Ω. The cathode is common to all pixels and is connected via a “C” pin on the header to the outer (“O”) of SMA1. Vbias is then applied to SMA1, which for an ArrayC sensors has a negative polarity with respect to the common cathode.

To access the standard output, the S49 header pin is then connected to the inner (“I”) of SMA2 via a decoupling capacitor of 10 nF. The outer (“O”) of SMA 2 is again connected to the common cathode (“C”). The standard signal is then available from SMA2.

Share Feedback
Your Opinion Matters

APPENDIX C – EXAMPLE OF USING THE SUMMED BREAKOUT BOARD

The Figure 15 shows the ARRAYX−BOB6−64S set up for readout of all of the pixels summed together.

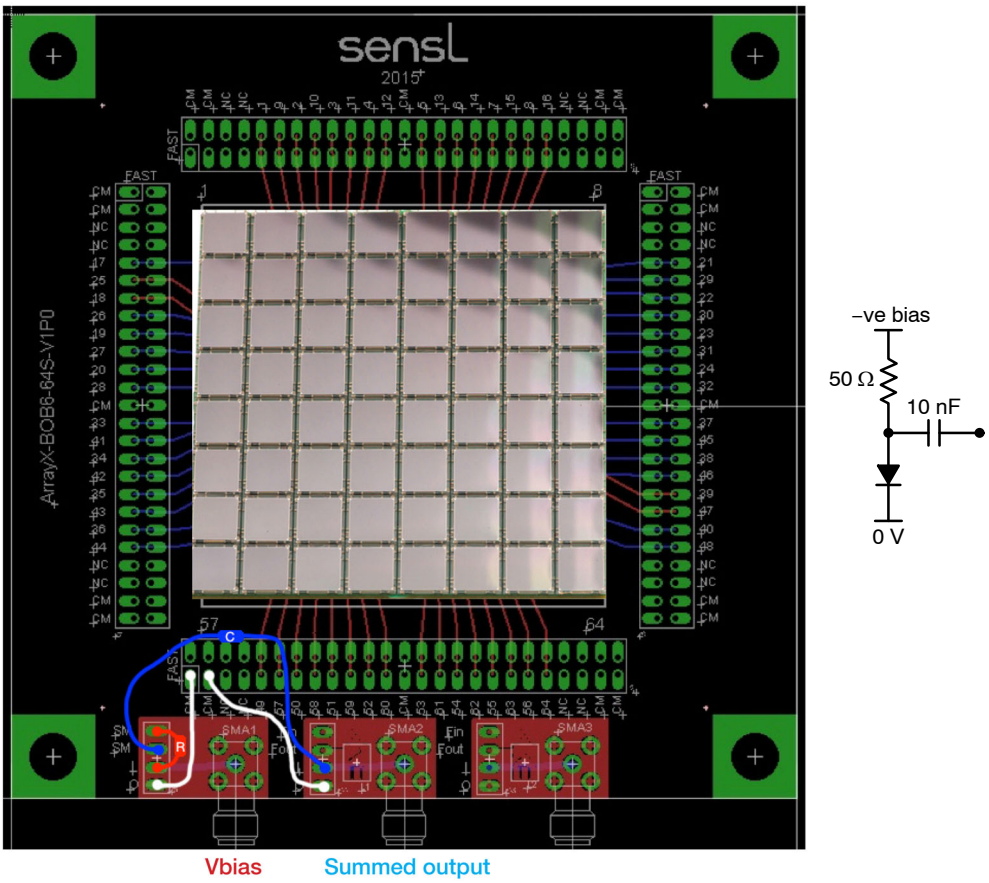

Figure 15. Example of an ARRAYC−60035−64P connected to an ARRAYX−BOB6−64S for the summed readout of all of the pixels (left), with simplified readout schematic (right).

SMA 1 is used for supplying Vbias and SMA2 for reading out the summed standard output from all pixels in the ARRAYC−60035−64P.

To bias the array, the inner (“I”) of SMA1 is connected to the SM (summed anode) pin on the same header, via a load resistor of 50 Ω. The cathode is also common to all pixels and is connected via a “CM” pin to the outer (“O”) of SMA1. Vbias is then applied to SMA1, which for an ArrayC has a negative polarity with respect to the common.

To access the summed standard output, the second SM header pin is then connected to the inner (“I”) of SMA2 via a decoupling capacitor of 10 nF. The outer (“O”) of SMA2 is again connected to the common cathode (“CM”). The summed signal is then available from SMA2.

Share Feedback
Your Opinion Matters

ORDERING INFORMATION

Product Code	Microcell Size (Total Number per Pixel)	Array Size	I/O Interface
6 mm Sensor Arrays			
ARRAYC−60035−4P−BGA	35 μm (18,980 microcells)	2 x 2	BGA
ARRAYC−60035−64P−PCB		8 x 8	Connector
3 mm Sensor ARRAYs			
ARRAYC−30035−16P−PCB	35 μm (4,774 microcells)	4 x 4	Connector
ARRAYC−30035−144P−PCB		12 x 12	Connector
Optional Breakout Boards			
ARRAYX−BOB6−64P−GEVK	Breakout board with connectors for use with the 8 x 8 arrays of 6 mm pixels		
ARRAYX−BOB3−16P−GEVK	Breakout board with connectors for use with the 4 x 4 arrays of 3 mm pixels		
ARRAYX−BOB3−144P−GEVK	Breakout board with connectors for use with the 12 x 12 arrays of 3 mm pixels		
Optional Summed Breakout Boards			
ARRAYX−BOB6−64S−GEVK	Summed breakout board for use with the 8 x 8 array of 6 mm pixels		
ARRAYX−BOB6−16S−GEVK	Summed breakout board for use with the 4 x 4 array of 3 mm pixels		
Evaluation Board with ARRAYC Permanently Attached			
ARRAYC−60035−4P−GEVB	Evaluation board with a permanently attached 2 x 2 array of 6 mm pixels		

Share Feedback
Your Opinion Matters

onsemi, onsemi, and other names, marks, and brands are registered and/or common law trademarks of Semiconductor Components Industries, LLC dba "**onsemi**" or its affiliates and/or subsidiaries in the United States and/or other countries. **onsemi** owns the rights to a number of patents, trademarks, copyrights, trade secrets, and other intellectual property. A listing of **onsemi**'s product/patent coverage may be accessed at www.onsemi.com/site/pdf/Patent−Marking.pdf. **onsemi** reserves the right to make changes at any time to any products or information herein, without notice. The information herein is provided "as−is" and **onsemi** makes no warranty, representation or guarantee regarding the accuracy of the information, product features, availability, functionality, or suitability of its products for any particular purpose, nor does **onsemi** assume any liability arising out of the application or use of any product or circuit, and specifically disclaims any and all liability, including without limitation special, consequential or incidental damages. Buyer is responsible for its products and applications using **onsemi** products, including compliance with all laws, regulations and safety requirements or standards, regardless of any support or applications information provided by **onsemi**. "Typical" parameters which may be provided in **onsemi** data sheets and/or specifications can and do vary in different applications and actual performance may vary over time. All operating parameters, including "Typicals" must be validated for each customer application by customer's technical experts. **onsemi** does not convey any license under any of its intellectual property rights nor the rights of others. **onsemi** products are not designed, intended, or authorized for use as a critical component in life support systems or any FDA Class 3 medical devices or medical devices with a same or similar classification in a foreign jurisdiction or any devices intended for implantation in the human body. Should Buyer purchase or use **onsemi** products for any such unintended or unauthorized application, Buyer shall indemnify and hold **onsemi** and its officers, employees, subsidiaries, affiliates, and distributors harmless against all claims, costs, damages, and expenses, and reasonable attorney fees arising out of, directly or indirectly, any claim of personal injury or death associated with such unintended or unauthorized use, even if such claim alleges that **onsemi** was negligent regarding the design or manufacture of the part. **onsemi** is an Equal Opportunity/Affirmative Action Employer. This literature is subject to all applicable copyright laws and is not for resale in any manner.

ADDITIONAL INFORMATION

TECHNICAL PUBLICATIONS:
Technical Library: www.onsemi.com/design/resources/technical−documentation
onsemi Website: www.onsemi.com

ONLINE SUPPORT: www.onsemi.com/support
For additional information, please contact your local Sales Representative at
www.onsemi.com/support/sales