Regulator - Fixed-Output, Synchronous, TINYBOOST®

FAN48617

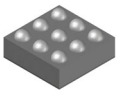

WLCSP9 1.215x1.215x0.581
CASE 567QW

Description

The FAN48617 is a low−power PWM only boost regulator designed to provide a minimum voltage−regulated rail from a standard single−cell Li−Ion battery and advanced battery chemistries. Even below the minimum system battery voltage, the device maintains the output voltage regulation for an output load current of 1000 mA. The combination of built−in power transistors, synchronous rectification, and low supply current suit the FAN48617 for battery−powered applications.

The FAN48617 is available in a 9−bump, 0.4 mm pitch, (1.215 x 1.215 mm) Wafer−Level Chip−Scale Package (WLCSP).

Features

- Input Voltage Range: 2.7 V to 4.5 V
- Output Voltage: 5.0 V
- 1000 mA Max. Load Capability
- PWM Only
- Up to 97% Efficient
- Forced Pass−Through Operation via EN Pin
- Internal Synchronous Rectification
- True Load Disconnect
- Short−Circuit Protection
- External Components: 2016 (Metric) 1 μH Inductor, 0402 Case Size Input / Output Capacitors
- This Device is Pb−Free, Halide Free and is RoHS Compliant

Applications

- Class−D Audio Amplifier
- Boost for Low−Voltage Li−Ion Batteries
- Smart Phones, Tablets, Portable Devices
- RF Applications
- NFC Applications

MARKING DIAGRAM

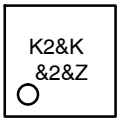

K2 = Specific Device Code
&K = 2−Digits Lot Run Traceability Code
&2 = 2−Digit Date Code
&Z = Assembly Plant Code

TYPICAL APPLICATION

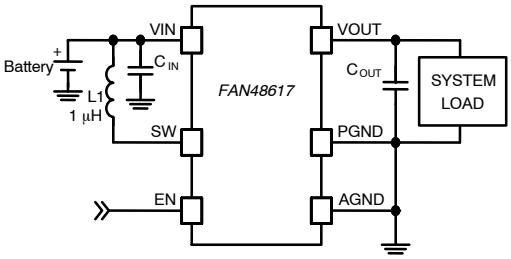

Figure 1. Typical Application

ORDERING INFORMATION

See detailed ordering and shipping information on page 8 of this data sheet.

© Semiconductor Components Industries, LLC, 2015

BLOCK DIAGRAM

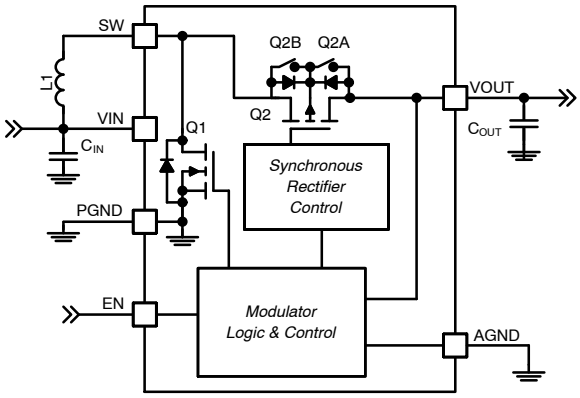

Figure 2. IC Block Diagram

Table 1. Recommended Components

Component	Description	Vendor	Parameter	Typ.	Unit
L1	20%, 3.9 A, 2016, 1.0 mm Height	DFE201610E−1R0M TOKO	Inductance	1	μH
			DCR (Series R)	48	mΩ
C_{IN}	20%, 6.3 V, X5R, 0402 (1005)	C1005X5R0J106M050BC TDK	Capacitance	10	μF
C_{OUT} 1 (Note 1)	20%, 6.3 V, X5R, 0402 (1005)	C1005X5R0J106M050BC TDK	Capacitance	2 x 10	
C_{OUT} 2 (Note 2)	20%, 6.3 V, X5R, 0402 (1005)	C1005X5R0J106M050BC TDK	Capacitance	3 x 10	

1. For applications with I_{OUT} < 500 mA use C_{OUT} 1.
2. For applications with 500 mA ≤ I_{OUT} < 1000 mA use C_{OUT} 2.

PIN CONFIGURATION

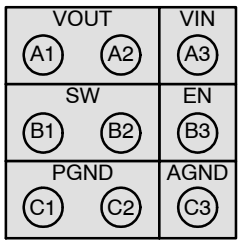

Figure 3. Top View

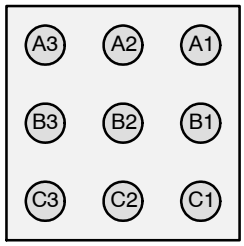

Figure 4. Bottom View

PIN DEFINITIONS

Pin #	Name	Description
A1, A2	VOUT	*Output Voltage*. This pin is the output voltage terminal; connect directly to C_{OUT}.
A3	VIN	*Input Voltage*. Connect to Li−Ion battery input power source and C_{IN}.
B1, B2	SW	*Switching Node*. Connect to inductor.
B3	EN	*Enable*. When this pin is HIGH, the circuit is enabled. After part is engaged, pin forces part into Forced−Pass−Through Mode when EN pin is pulled LOW.
C1, C2	PGND	*Power Ground*. This is the power return for the IC. C_{OUT} capacitor should be returned with the shortest path possible to these pins.
C3	AGND	*Analog Ground*. This is the signal ground reference for the IC. All voltage levels are measured with respect to this pin – connect to PGND at a single point.

ABSOLUTE MAXIMUM RATINGS

Symbol	Parameter		Min	Max	Unit
V_{IN}	Voltage on VIN Pin		−0.3	6.0	V
V_{OUT}	Voltage on VOUT Pin		−0.3	6.0	V
V_{SW}	SW Node	DC	−0.3	6.0	V
		Transient: 10 ns, 3 MHz	−1.0	8.0	
V_{CC}	Voltage on Other Pins		−0.3	6.0 (Note 3)	V
ESD	Electrostatic Discharge Protection Level	Human Body Model, ANSI/ESDA/JEDEC JS−001−2012	2.0		kV
		Charged Device Model per JESD22−C101	1.0		
T_J	Junction Temperature		−40	+150	°C
T_{STG}	Storage Temperature		−65	+150	°C
T_L	Lead Soldering Temperature, 10 Seconds		−	+260	°C

Stresses exceeding those listed in the Maximum Ratings table may damage the device. If any of these limits are exceeded, device functionality should not be assumed, damage may occur and reliability may be affected.

3. Lesser of 6.0 V or V_{IN} + 0.3 V.

RECOMMENDED OPERATING CONDITIONS

Symbol	Parameter	Min	Max	Unit
V_{IN}	Supply Voltage	2.7	4.5	V
I_{OUT}	Maximum Output Current	1000	−	mA
T_A	Ambient Temperature	−40	+85	°C
T_J	Junction Temperature	−40	+125	°C

Functional operation above the stresses listed in the Recommended Operating Ranges is not implied. Extended exposure to stresses beyond the Recommended Operating Ranges limits may affect device reliability.

THERMAL PROPERTIES (Junction−to−ambient thermal resistance is a function of application and board layout. This data is measured with four− layer 2s2p boards with vias in accordance to JEDEC standard JESD51. Special attention must be paid not to exceed junction temperature, $T_{J(max)}$, at a given ambient temperature, T_A.)

Symbol	Characteristic	Value	Unit
Θ_{JA}	Junction−to−Ambient Thermal Resistance	50	°C/W

ELECTRICAL CHARACTERISTICS (Recommended operating conditions, unless otherwise noted, circuit per Figure 1, V_{OUT} = 5.0 V. Typical, minimum and maximum values are given at V_{IN} = 3.6 V, T_A = 25°C, –40°C, and +85°C.)

Symbol	Parameter	Conditions	Min	Typ	Max	Unit
POWER SUPPLY						
I_Q	V_{IN} Quiescent Current	I_{OUT} = 0 mA, EN = 1.8 V, No Switching	–	95	–	μA
		Forced Pass–Through EN = 0 V, V_{OUT} = V_{IN}	–	3.5	–	
V_{UVLO}	Under–Voltage Lockout	V_{IN} Rising	–	2.20	–	V
V_{UVLO_HYS}	Under–Voltage Lockout Hysteresis		–	150	–	mV
INPUTS						
V_{IH}	Enable HIGH Voltage		1.05	–	–	V
V_{IL}	Enable LOW Voltage		–	–	0.4	V
OUTPUTS						
V_{REG}	Output Voltage Accuracy DC (Note 4)	2.7 V ≤ V_{IN} ≤ 4.5 V	–2	–	+2	%
TIMING						
f_{SW}	Switching Frequency	I_{OUT} = 300 mA	1.8	2.3	2.8	MHz
t_{SS} (Note 5)	EN HIGH to 95% of Regulation	I_{OUT} = 150 mA	–	425	–	μs
t_{RST} (Note 5)	FAULT Restart Timer		–	20	–	ms
POWER STAGE						
$R_{DS(ON)N}$	N–Channel Boost Switch $R_{DS(ON)}$		–	63	–	mΩ
$R_{DS(ON)P}$	P–Channel Sync. Rectifier $R_{DS(ON)}$		–	52	–	mΩ

Product parametric performance is indicated in the Electrical Characteristics for the listed test conditions, unless otherwise noted. Product performance may not be indicated by the Electrical Characteristics if operated under different conditions.

4. DC I_{LOAD} from 0 to 1000 mA. V_{OUT} measured from mid–point of output voltage ripple. Effective capacitance of C_{OUT} ≥ 6.3 μF.
5. Guaranteed by design and characterization; not tested in production.

TYPICAL PERFORMANCE CHARACTERISTICS

(Unless otherwise specified; V_{IN} = 3.6 V, V_{OUT} = 5.0 V, T_A = 25°C, and circuit according to Figure 1.
Components: C_{IN} = 10 μF, C_{OUT} = 3 x 10 μF (0402, X5R, 6.3 V, C1005X5R0J106M050BC), L_1 = 1 μH (2016, 48 mΩ, DFE201610E−1R0M).)

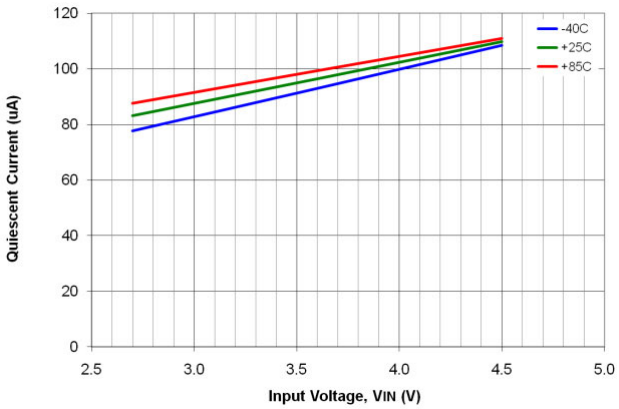

Figure 5. Quiescent Current (No Switching) vs. Input Voltage and Temperature

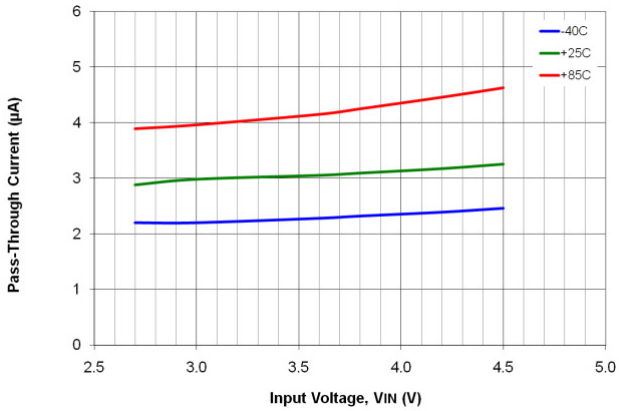

Figure 6. Pass−Through Current vs. Input Voltage and Temperature

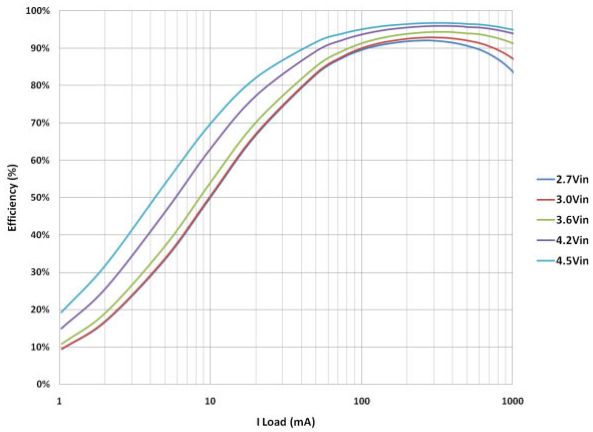

Figure 7. Efficiency vs. Load Current and Input Voltage

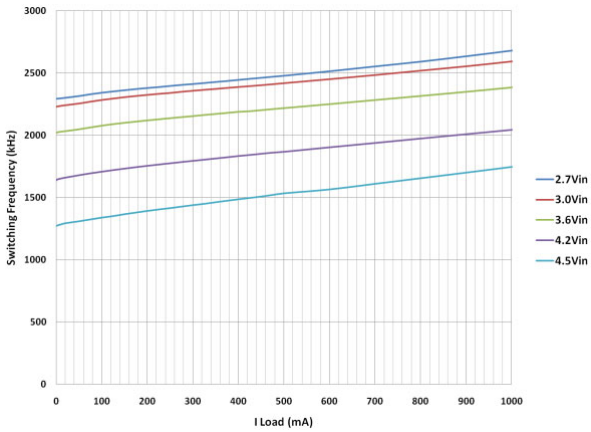

Figure 8. Switching Frequency vs. Load Current and Input Voltage

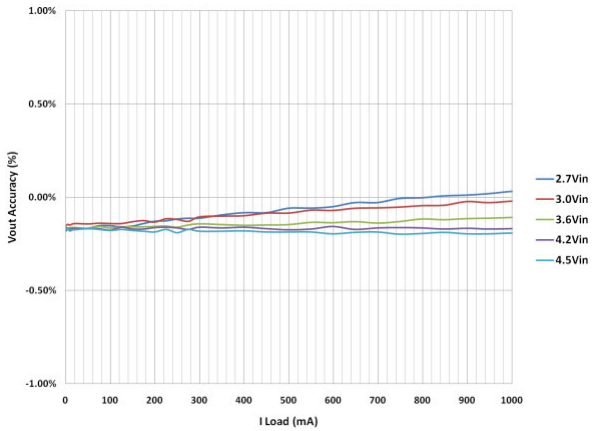

Figure 9. Output Regulation vs. Load Current and Input Voltage

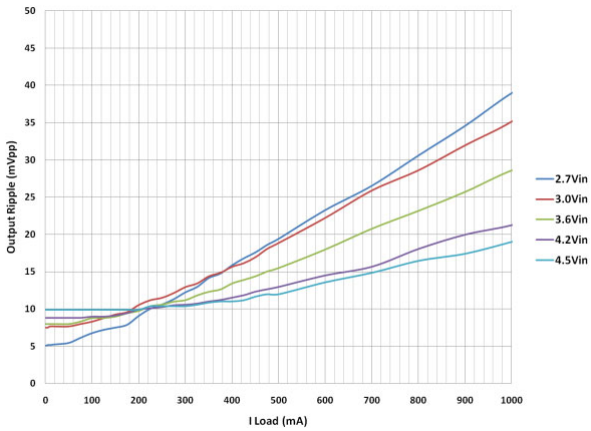

Figure 10. Output Ripple vs. Load Current and Input Voltage

TYPICAL PERFORMANCE CHARACTERISTICS

(Unless otherwise specified; V_{IN} = 3.6 V, V_{OUT} = 5.0 V, T_A = 25°C, and circuit and components according to Figure 1.
Components: C_{IN} = 10 μF, C_{OUT} = 3 x 10 μF (0402, X5R, 6.3 V, C1005X5R0J106M050BC), L1 = 1 μH (2016, 48 mΩ, DFE201610E−1R0M).)

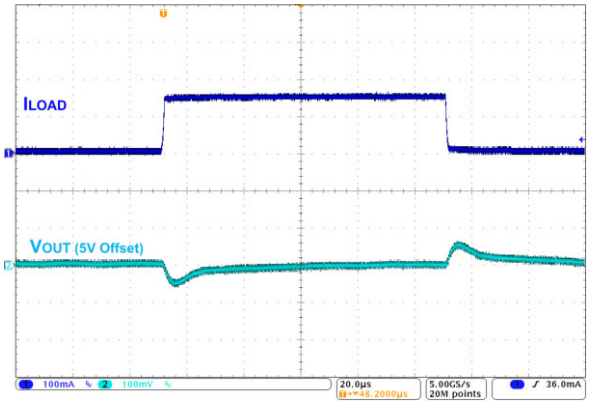

Figure 11. Load Transient, 10 <−−>150 mA, 1 μs Edge

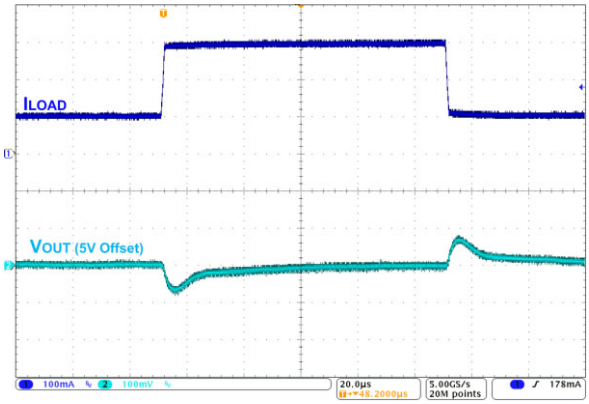

Figure 12. Load Transient, 100 <−−> 300 mA, 1 μs Edge

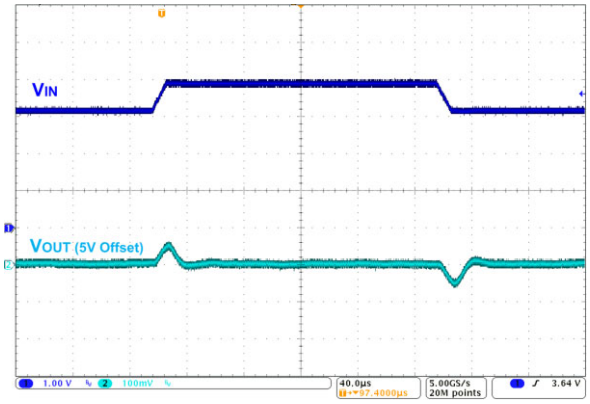

Figure 13. Line Transient, 3.2 V <−−> 3.9 V, 10 μs Edge, 150 mA Load

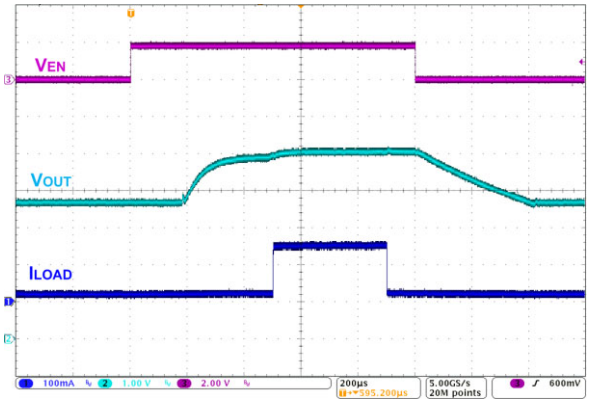

Figure 14. Pass−Through Mode <−−> Boost Mode with Load Transient, 20 <−−>150 mA, 1 μs Edge

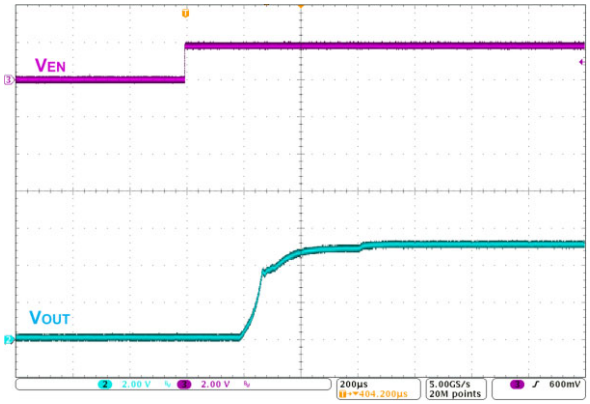

Figure 15. Startup, 150 mA Load

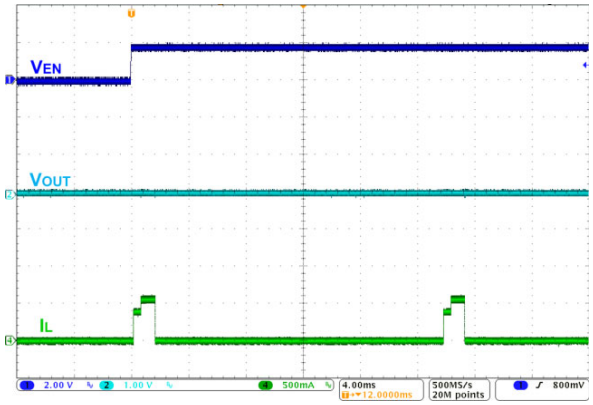

Figure 16. Fault Restart

CIRCUIT DESCRIPTION

FAN48617 is a synchronous PWM Only boost regulator. The regulator's Pass−Through Mode automatically activates when V_{IN} is above the boost regulator's set point.

Table 2. OPERATING MODES

Mode	Description	Invoked When:
LIN	Linear Startup	$V_{IN} > V_{OUT}$
SS	Boost Soft−Start	$V_{IN} < V_{OUT} < V_{OUT(TARGET)}$
BST	Boost Operating Mode	$V_{OUT} = V_{OUT(TARGET)}$
PT	Pass−Through Mode	$V_{IN} > V_{OUT(TARGET)}$ or when EN is pulled LOW after initial startup

Boost Mode Regulation

The FAN48617 uses a current−mode modulator to achieve excellent transient response.

Table 3. BOOST STARTUP SEQUENCE

Start Mode	Entry	Exit	End Mode	Timeout (µs)
LIN1	$V_{IN} > V_{UVLO}$, EN=1	$V_{OUT} > V_{IN}$−300 mV	SS	−
		Timeout	LIN2	512
LIN2	LIN1 Exit	$V_{OUT} > V_{IN}$−300 mV	SS	−
		Timeout	FAULT	1024
SS	LIN1 or LIN2 Exit	$V_{OUT} = V_{OUT(TARGET)}$	BST	−
		Overload Timeout	FAULT	64

LIN Mode

When EN is HIGH and $V_{IN} > V_{UVLO}$, the regulator first attempts to bring V_{OUT} within 300 mV of V_{IN} by using the internal fixed−current source from VIN (Q2). The current is limited to the LIN1 set point.

If V_{OUT} reaches V_{IN}−300 mV during LIN1 Mode, the SS Mode is initiated. Otherwise, LIN1 times out after 512 µs and LIN2 Mode is entered.

In LIN2 Mode, the current source is incremented. If VOUT fails to reach V_{IN}−300 mV after 1024 µs, a fault condition is declared and the device waits 20 ms to attempt an automatic restart.

Soft−Start (SS) Mode

Upon the successful completion of LIN Mode ($V_{OUT} \geq V_{IN}$−300 mV), the regulator begins switching with boost pulses current limited to 50% of nominal level.

During SS Mode, if V_{OUT} fails to reach regulation during the SS ramp sequence for more than 64 µs, a fault is declared. If large C_{OUT} is used, the reference is automatically stepped slower to avoid excessive input current draw.

Boost (BST) Mode

This is a normal operating mode of the regulator.

Pass−Through (PT) Mode

The device allows the user to force the device in Forced Pass−Through Mode through the EN pin. If the EN pin is pulled HIGH, the device starts operating in Boost Mode. Once the EN pin is pulled LOW, the device is forced into Pass−Through Mode. To disable the device, the input supply voltage must be removed. The device cannot startup in Forced Pass−Through Mode *(see Figure 17)*. During startup, keep the EN pulled HIGH for at least 350 µs before pulling it LOW in order to make sure that the device enters Pass−Through Mode realiably.

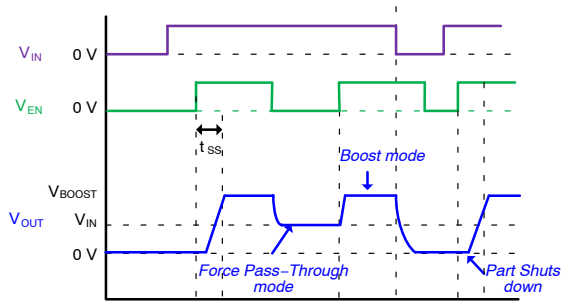

Figure 17. Pass−Through Profile

Current Limit Protection

The FAN48617 has valley current limit protection in case of overload situations. The valley current limit will prevent high current from causing damage to the IC and the inductor. The current limit is halved during soft−start.

When starting into a fault condition, the input current will be limited by LIN1 and LIN2 current threshold.

Fault State

The regulator enters Fault State under any of the following conditions:

- V_{OUT} fails to achieve the voltage required to advance from LIN Mode to SS Mode.
- V_{OUT} fails to achieve the voltage required to advance from SS Mode to BST Mode.
- Boost current limit triggers for 2 ms during BST Mode.
- $V_{IN} - V_{OUT} > 300$ mV; this fault can occur only after successful completion of the soft−start sequence.
- $V_{IN} < V_{UVLO}$.

Once a fault is triggered, the regulator stops switching and presents a high−impedance path between VIN and VOUT. After waiting 20 ms, an automatic restart is attempted.

Over−Temperature

The regulator shuts down if the die temperature exceeds 150°C and restarts when the IC cools by ~20°C.

APPLICATION INFORMATION

Output Capacitance (C_{OUT})

The effective capacitance (C_{EFF} (Note 6)) of small, high−value ceramic capacitors decreases as their bias voltage increases, as illustrated in the graph below:

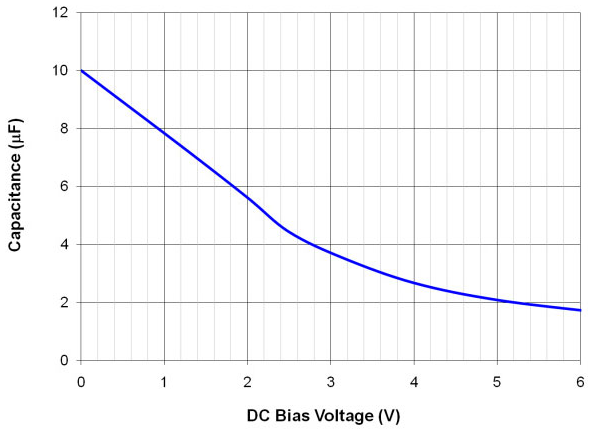

Figure 18. C_{EFF} for 10 μF, 0402, X5R, 6.3 V−Rated Capacitor (TDK C1005X5R0J106M050BC)

FAN48617 is guaranteed for stable operation with the minimum value of C_{EFF} ($C_{EFF(MIN)}$) outlined in Table 4.

Table 4. MINIMUM C_{EFF} REQUIRED FOR STABILITY

Operating Conditions			$C_{EFF(MIN)}$ (μF)
V_{OUT} (V)	V_{IN} (V)	I_{LOAD} (mA)	
5.0	2.7 to 4.5	0 to 500	4.2
5.0	2.7 to 4.5	0 to 1000	6.3

6. C_{EFF} varies by manufacturer, capacitor material, and case size.

Layout Recommendations

The layout recommendations below highlight various top−copper pours by using different colors.

To minimize spikes at VOUT, C_{OUT} must be placed as close as possible to PGND and VOUT, as shown in Figure 19.

For best thermal performance, maximize the pour area for all planes other than SW. The ground pour, especially, should fill all available PCB surface area and be tied to internal layers with a cluster of thermal vias.

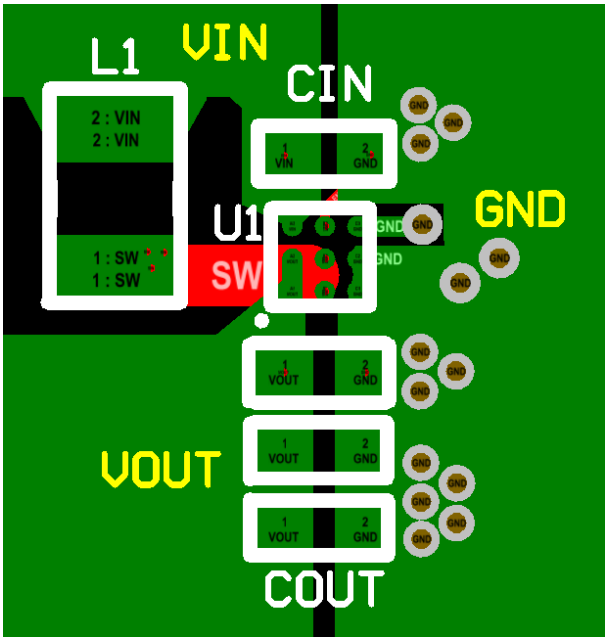

Figure 19. Layout Recommendation

ORDERING INFORMATION

Part Number	Device Marking	V_{OUT}	Operating Temperature	Package	Packing Method†
FAN48617UC50X	K2	5.0 V	−40 to 85°C	WLCSP9 1.215x1.215x0.581 (Pb−Free and Halide Free)	3000 / Tape and Reel

†For information on tape and reel specifications, including part orientation and tape sizes, please refer to our Tape and Reel Packaging Specifications Brochure, BRD8011/D.

The table below pertains to MOD drawing on the following page.

PRODUCT−SPECIFIC PACKAGE DIMENSIONS

Product	D	E	X	Y
FAN48617UC50X	1.215 ±0.030 mm	1.215 ±0.030 mm	0.2075 mm	0.2075 mm

TINYBOOST is registered trademarks of Semiconductor Components Industries, LLC dba "**onsemi**" or its affiliates and/or subsidiaries in the United States and/or other countries.

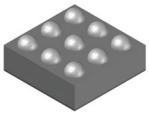

WLCSP9 1.215x1.215x0.581
CASE 567QW
ISSUE B

DATE 24 FEB 2023

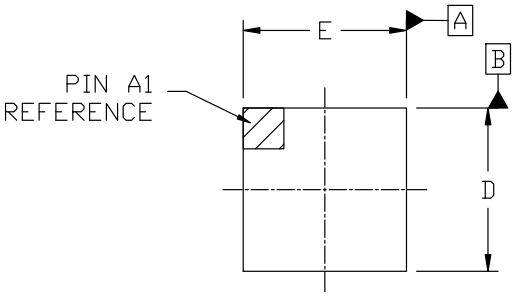

TOP VIEW

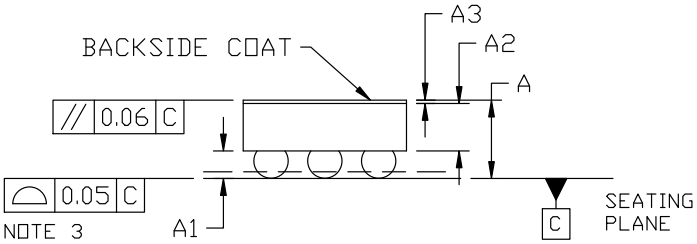

SIDE VIEW

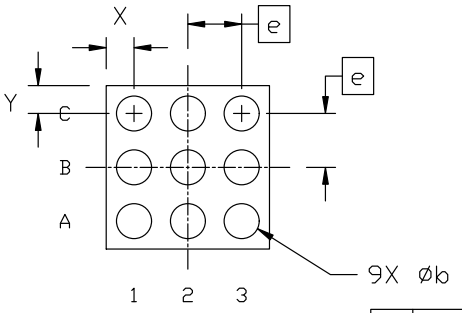

BOTTOM VIEW

0.005 Ⓜ C A B

NOTES:

1. DIMENSIONING AND TOLERANCING PER ASME Y14.5M, 2009.
2. CONTROLLING DIMENSION: MILLIMETERS
3. COPLANARITY APPLIES TO THE SPHERICAL CROWNS OF THE SOLDER BALLS.
4. DATUM C, THE SEATING PLANE, IS DEFINED BY THE SPHERICAL CROWNS OF THE SOLDER BALLS.
5. DIMENSION b IS MEASURED AT THE MAXIMUM SOLDER BALL DIAMETER PARALLEL TO DATUM C.

DIM	MILLIMETERS		
	MIN.	NOM.	MAX.
A	0.542	0.581	0.620
A1	0.183	0.203	0.223
A2	0.335	0.353	0.371
A3	0.022	0.025	0.027
b	0.24	0.26	0.28
D	1.185	1.215	1.245
E	1.185	1.215	1.245
e	0.400 BSC		
X	0.208 REF		
Y	0.208 REF		

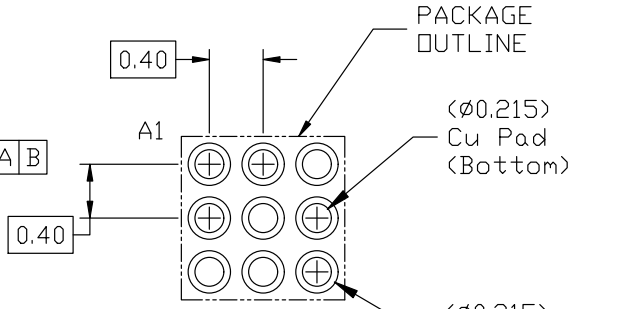

RECOMMENDED
MOUNTING FOOTPRINT

* For additional information on our Pb-Free strategy and soldering details, please download the onsemi Soldering and Mounting Techniques Reference Manual, SOLDERRM/D.

DOCUMENT NUMBER:	98AON13355G	Electronic versions are uncontrolled except when accessed directly from the Document Repository. Printed versions are uncontrolled except when stamped "CONTROLLED COPY" in red.
DESCRIPTION:	WLCSP9 1.215x1.215x0.581	PAGE 1 OF 1

onsemi and onsemi are trademarks of Semiconductor Components Industries, LLC dba **onsemi** or its subsidiaries in the United States and/or other countries. **onsemi** reserves the right to make changes without further notice to any products herein. **onsemi** makes no warranty, representation or guarantee regarding the suitability of its products for any particular purpose, nor does **onsemi** assume any liability arising out of the application or use of any product or circuit, and specifically disclaims any and all liability, including without limitation special, consequential or incidental damages. **onsemi** does not convey any license under its patent rights nor the rights of others.

onsemi, onsemi, and other names, marks, and brands are registered and/or common law trademarks of Semiconductor Components Industries, LLC dba "**onsemi**" or its affiliates and/or subsidiaries in the United States and/or other countries. **onsemi** owns the rights to a number of patents, trademarks, copyrights, trade secrets, and other intellectual property. A listing of **onsemi**'s product/patent coverage may be accessed at www.onsemi.com/site/pdf/Patent−Marking.pdf. **onsemi** reserves the right to make changes at any time to any products or information herein, without notice. The information herein is provided "as−is" and **onsemi** makes no warranty, representation or guarantee regarding the accuracy of the information, product features, availability, functionality, or suitability of its products for any particular purpose, nor does **onsemi** assume any liability arising out of the application or use of any product or circuit, and specifically disclaims any and all liability, including without limitation special, consequential or incidental damages. Buyer is responsible for its products and applications using **onsemi** products, including compliance with all laws, regulations and safety requirements or standards, regardless of any support or applications information provided by **onsemi**. "Typical" parameters which may be provided in **onsemi** data sheets and/or specifications can and do vary in different applications and actual performance may vary over time. All operating parameters, including "Typicals" must be validated for each customer application by customer's technical experts. **onsemi** does not convey any license under any of its intellectual property rights nor the rights of others. **onsemi** products are not designed, intended, or authorized for use as a critical component in life support systems or any FDA Class 3 medical devices or medical devices with a same or similar classification in a foreign jurisdiction or any devices intended for implantation in the human body. Should Buyer purchase or use **onsemi** products for any such unintended or unauthorized application, Buyer shall indemnify and hold **onsemi** and its officers, employees, subsidiaries, affiliates, and distributors harmless against all claims, costs, damages, and expenses, and reasonable attorney fees arising out of, directly or indirectly, any claim of personal injury or death associated with such unintended or unauthorized use, even if such claim alleges that **onsemi** was negligent regarding the design or manufacture of the part. **onsemi** is an Equal Opportunity/Affirmative Action Employer. This literature is subject to all applicable copyright laws and is not for resale in any manner.

ADDITIONAL INFORMATION

TECHNICAL PUBLICATIONS:
Technical Library: www.onsemi.com/design/resources/technical−documentation
onsemi Website: www.onsemi.com

ONLINE SUPPORT: www.onsemi.com/support
For additional information, please contact your local Sales Representative at
www.onsemi.com/support/sales