2.5 V/3.3 V 3.0 GHz Differential 1:4 CML Fanout Buffer

Multi−Level Inputs with Internal Termination

NB6L14M

MARKING DIAGRAM*

QFN−16
MN SUFFIX
CASE 485G

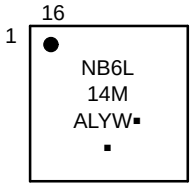

A = Assembly Location
L = Wafer Lot
Y = Year
W = Work Week
▪ = Pb−Free Package
(Note: Microdot may be in either location)

*For additional marking information, refer to Application Note AND8002/D.

Description

The NB6L14M is a 3.0 GHz differential 1:4 CML clock or data fanout buffer. The differential inputs incorporate internal 50 Ω termination resistors that are accessed through the VT pin. This feature allows the NB6L14M to accept various logic standards, such as LVPECL, CML, or LVDS logic levels. The 16 mA differential CML outputs provide matching internal 50 Ω terminations and produce 400 mV output swings when externally terminated with a 50 Ω resistor to V_{CC}. The V_{REFAC} reference output can be used to rebias capacitor−coupled differential or single−ended input signals. The 1:4 fanout design was optimized for low output skew applications.

The NB6L14M is a member of the ECLinPS MAX™ family of high performance clock and data products.

Features

- Input Clock Frequency > 3.0 GHz
- Input Data Rate > 2.5 Gb/s
- < 20 ps Within Device Output Skew
- 350 ps Typical Propagation Delay
- 90 ps Typical Rise and Fall Times
- Differential CML Outputs, 340 mV Amplitude, Typical
- CML Mode Operating Range: V_{CC} = 2.375 V to 3.63 V with GND = 0 V
- Internal Input and Output Termination Resistors, 50 Ω
- V_{REFAC} Reference Output Voltage
- −40°C to +85°C Ambient Operating Temperature
- Available in 3 mm x 3 mm 16 Pin QFN
- These are Pb−Free Devices

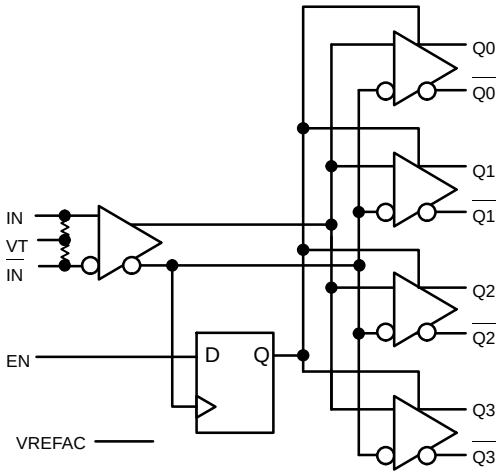

Figure 1. Simplified Logic Diagram

ORDERING INFORMATION

See detailed ordering and shipping information in the package dimensions section on page 9 of this data sheet.

© Semiconductor Components Industries, LLC, 2008

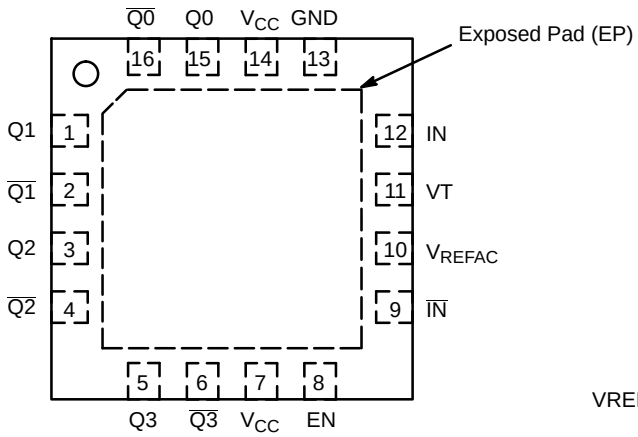

Figure 2. QFN−16 Pinout
(Top View)

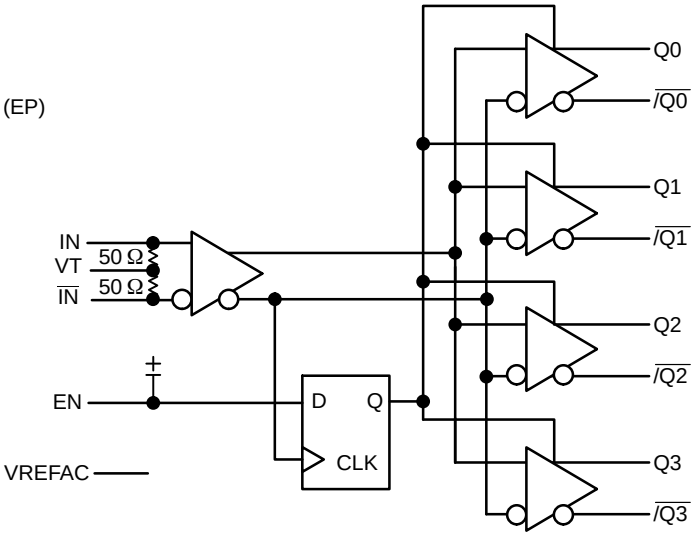

Figure 3. Logic Diagram

Table 1. EN TRUTH TABLE

IN	$\overline{IN}$	EN	Q0:Q3	$\overline{Q0}$:$\overline{Q3}$
0	1	1	0	1
1	0	1	1	0
x	x	0	0+	1+

+ = On next negative transition of the input signal (IN).
x = Don't care.

Table 2. PIN DESCRIPTION

Pin	Name	I/O	Description
1	Q1	CML Output	Non−inverted Differential Output. Typically Terminated with 50 Ω Resistor to V_{CC}.
2	$\overline{Q1}$	CML Output	Inverted Differential Output. Typically Terminated with 50 Ω Resistor to V_{CC} .
3	Q2	CML Output	Non−inverted Differential Output. Typically Terminated with 50 Ω Resistor to V_{CC}.
4	$\overline{Q2}$	CML Output	Inverted Differential Output. Typically Terminated with 50 Ω Resistor to V_{CC}.
5	Q3	CML Output	Non−inverted Differential Output. Typically Terminated with 50 Ω Resistor to V_{CC}.
6	$\overline{Q3}$	CML Output	Inverted Differential Output. Typically Terminated with 50 Ω Resistor to V_{CC}.
7	V_{CC}	−	Positive Supply Voltage
8	EN	LVTTL/LVCMOS	Synchronous Output Enable. When LOW, Q outputs will go LOW and $\overline{Q}$ outputs will go HIGH on the next negative transition of IN input. The internal D_{FF} register is clocked on the falling edge of IN input (see Figure 16). The EN pin has an internal pullup resistor and defaults HIGH when left open.
9	$\overline{IN}$	LVPECL, CML, LVDS	Inverted Differential Clock Input. Internal 50 Ω Resistor to Termination Pin, VT.
10	V_{REFAC}		Output Voltage Reference for capacitor−coupled inputs, only.
11	VT		Internal 100 Ω center−tapped Termination Pin for IN and $\overline{IN}$.
12	IN	LVPECL, CML, LVDS	Non−inverted Differential Clock Input. Internal 50 Ω Resistor to Termination Pin, VT.
13	GND	−	Negative Supply Voltage
14	V_{CC}	−	Positive Supply Voltage
15	Q0	CML Output	Noninverted Differential Output. Typically Terminated with 50 Ω Resistor to V_{CC}.
16	$\overline{Q0}$	CML Output	Inverted Differential Output. Typically Terminated with 50 Ω Resistor to V_{CC}.
−	EP	−	The Exposed Pad (EP) on the QFN−16 package bottom is thermally connected to the die for improved heat transfer out of package. The exposed pad must be attached to a heat−sinking conduit. The pad is not electrically connected to the die, but is recommended to be electrically and thermally connected to GND on the PC board.

1. In the differential configuration when the input termination pin VT, is connected to a common termination voltage or left open, and if no signal is applied on IN/$\overline{IN}$ inputs, then the device will be susceptible to self−oscillation.

Table 3. ATTRIBUTES

Characteristics		Value
ESD Protection	Human Body Model Machine Mode	> 2 kV > 200 V
Moisture Sensitivity (Note 2)	QFN−16	Level 1
Flammability Rating	Oxygen Index: 28 to 34	UL 94 V−0 @ 0.125 in
Transistor Count		167
Meets or exceeds JEDEC Spec EIA/JESD78 IC Latchup Test		

2. For additional information, see Application Note AND8003/D.

Table 4. MAXIMUM RATINGS

Symbol	Parameter	Condition 1	Condition 2	Rating	Unit
V_{CC}	Positive Power Supply	GND = 0 V		4.0	V
V_{Io}	Positive Input/Output	GND = 0 V	$-0.5\ V \le V_{Io} \le V_{CC} + 0.5\ V$	4.5	V
I_{IN}	Input Current Source or Sink Current ($IN/\overline{IN}$)			±50	mA
I_{VREFAC}	Sink/Source Current			±2.0	mA
T_A	Operating Temperature Range			−40 to +85	°C
T_{stg}	Storage Temperature Range			−65 to +150	°C
θ_{JA}	Thermal Resistance (Junction−to−Ambient) (Note 3)	0 lfpm 500 lfpm	QFN−16 QFN−16	42 35	°C/W °C/W
θ_{JC}	Thermal Resistance (Junction−to−Case)	2S2P (Note 3)	QFN−16	4	°C/W
T_{sol}	Wave Solder Pb−Free			265	°C

Stresses exceeding those listed in the Maximum Ratings table may damage the device. If any of these limits are exceeded, device functionality should not be assumed, damage may occur and reliability may be affected.

3. JEDEC standard multilayer board − 2S2P (2 signal, 2 power) with 8 filled thermal vias under exposed pad.

Table 5. DC CHARACTERISTICS, Multi−Level Inputs, CML Outputs
V_{CC} = 2.375 V to 3.63 V, GND = 0 V, T_A = −40°C to +85°C

Symbol	Characteristic	Min	Typ	Max	Unit
I_{CC}	Power Supply Current (Inputs and Outputs Open)	80	100	130	mA
CML OUTPUT (Notes 4 and 5)					
V_{OH}	Output HIGH Voltage V_{CC} = 3.3 V V_{CC} = 2.5 V	V_{CC} − 40 3260 2460	V_{CC} − 10 3290 2490	V_{CC} 3300 2500	mV
V_{OL}	Output LOW Voltage V_{CC} = 3.3 V V_{CC} = 2.5 V	V_{CC} − 500 2800 2000	V_{CC} − 400 2900 2100	V_{CC} − 300 3000 2200	mV
DIFFERENTIAL INPUT DRIVEN SINGLE−ENDED (See Figures 5 and 6)					
V_{th}	Input Threshold Reference Voltage Range (Note 6)	1100		V_{CC} − 100	mV
V_{IH}	Single−Ended Input High Voltage	V_{th} + 100		V_{CC}	mV
V_{IL}	Single−Ended Input LOW Voltage	GND		V_{th} − 100	mV
V_{ISE}	Single−Ended Input Voltage Amplitude (V_{IH} − V_{IL})	200		V_{CC} − GND	mV
V_{REFAC}					
V_{REFAC}	Output Reference Voltage (V_{CC} ≥ 2.5 V)	V_{CC} − 1525	V_{CC} − 1425	V_{CC} − 1325	mV
DIFFERENTIAL INPUTS DRIVEN DIFFERENTIALLY (See Figures 7 and 8) (Note 7)					
V_{IHD}	Differential Input HIGH Voltage	1200		V_{CC}	mV
V_{ILD}	Differential Input LOW Voltage	GND		V_{IHD} − 100	mV
V_{ID}	Differential Input Voltage (IN−$\overline{IN}$) (V_{IHD}−V_{ILD})	100		V_{CC} − GND	mV
V_{CMR}	Input Common Mode Range (Differential Configuration) (Note 8)	950		V_{CC} – 50	mV
I_{IH}	Input HIGH Current IN/$\overline{IN}$ (VT Open)	−150		+150	μA
I_{IL}	Input LOW Current IN/$\overline{IN}$ (VT Open)	−150		+150	μA
LVTTL/LVCMOS INPUT DC ELECTRICAL CHARACTERISTICS					
V_{IH}	Input HIGH Voltage	2.0		V_{CC}	V
V_{IL}	Input LOW Voltage	GND		0.8	V
I_{IH}	Input HIGH Current, V_{CC} = V_{IN} = 3.63 V	−150		+150	μA
I_{IL}	Input LOW Current, V_{CC} = 3.63 V, V_{IN} = 0 V	−150		+150	μA
TERMINATION RESISTORS					
R_{TIN}	Internal Input Termination Resistor (IN to VT)	40	50	60	Ω
R_{DIFF_IN}	Differential Input Resistance (IN to $\overline{IN}$)	80	100	120	Ω
R_{TOUT}	Internal Output Termination Resistor	40	50	60	Ω

NOTE: Device will meet the specifications after thermal equilibrium has been established when mounted in a test socket or printed circuit board with maintained transverse airflow greater than 500 lfpm.

4. CML outputs loaded with 50 Ω to V_{CC} for proper operation.
5. Input and output parameters vary 1:1 with V_{CC}.
6. V_{th} is applied to the complementary input when operating in single−ended mode.
7. V_{IHD}, V_{ILD}, V_{ID} and V_{CMR} parameters must be complied with simultaneously.
8. V_{CMR} minimum varies 1:1 with GND, V_{CMR} max varies 1:1 with V_{CC}. The V_{CMR} range is referenced to the most positive side of the differential input signal.

Table 6. AC CHARACTERISTICS V_{CC} = 2.375 V to 3.63 V, GND = 0 V, T_A = −40°C to +85°C (Note 9)

Symbol	Characteristic	Min	Typ	Max	Unit
V_{OUTPP}	Output Voltage Amplitude (@ $V_{INPPmin}$) (Note 10) $f_{in} \le 2.5$ GHz 2.5 GHz $\le f_{in} \le$ 3.0 GHz	 180 100	 340 250		mV
f_{DATA}	Maximum Operating Data Rate		2.5		Gb/s
t_{PD}	Propagation Delay IN to Q	230	350	480	ps
t_S	Set−Up Time (Note 11) EN to IN, $\overline{IN}$	300			ps
t_H	Hold Time (Note 11) EN to IN, $\overline{IN}$	300			ps
t_{SKEW}	Within−Device Skew (Note 12) Device−to−Device Skew (Note 13)		5.0	20 80	ps
t_{DC}	Output Clock Duty Cycle $f_{in} \le 3.0$ GHz (Referenced Duty Cycle = 50%)	40	50	60	%
t_{JITTER}	RMS Random Jitter (Note 14) $f_{IN} \le 3.0$ GHz Peak−to−Peak Data Dependent Jitter (Note 15) $f_{DATA} \le 3.0$ Gb/s		 0.2 20	 0.5	ps
V_{INPP}	Input Voltage Swing/Sensitivity (Differential Configuration) (Note 10)	100		V_{CC} − GND	mV
t_r,t_f	Output Rise/Fall Times (20%−80%)		90	150	ps

NOTE: Device will meet the specifications after thermal equilibrium has been established when mounted in a test socket or printed circuit board with maintained transverse airflow greater than 500 lfpm.

9. Measured by forcing V_{INPP} (minimum) from a 50% duty cycle clock source. All loading with an external R_L = 50 Ω to V_{CC}. Input edge rates 40 ps (20%−80%).
10. Input and output voltage swing is a single−ended measurement operating in differential mode.
11. Set−up and hold times apply to synchronous applications that intend to enable/disable before the next clock cycle. For asynchronous applications, set−up and hold times do not apply.
12. Within device skew is measured between two different outputs under identical power supply, temperature and input conditions.
13. Device to device skew is measured between outputs under identical transition @ 0.5 GHz.
14. Additive RMS jitter with 50% duty cycle clock signal.
15. Additive peak−to−peak data dependent jitter with input NRZ data at PRBS 23−1 and K28.5 at 2.5 Gb/s.

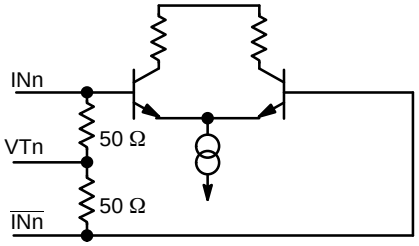

Figure 4. Input Structure

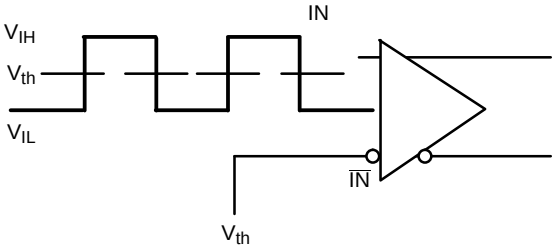

Figure 5. Differential Input Driven Single−Ended

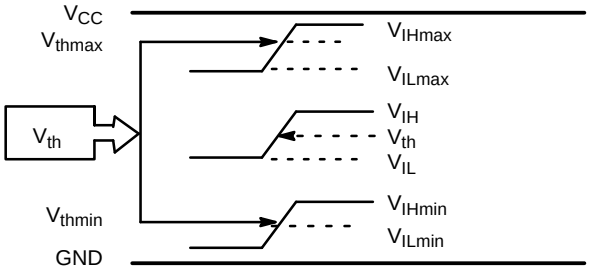

Figure 6. V_{th} Diagram

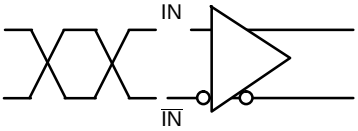

Figure 7. Differential Inputs Driven Differentially

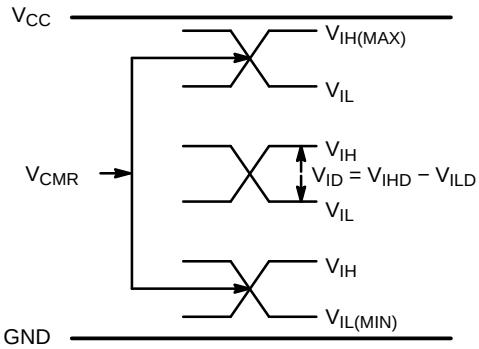

Figure 8. V_{CMR} Diagram

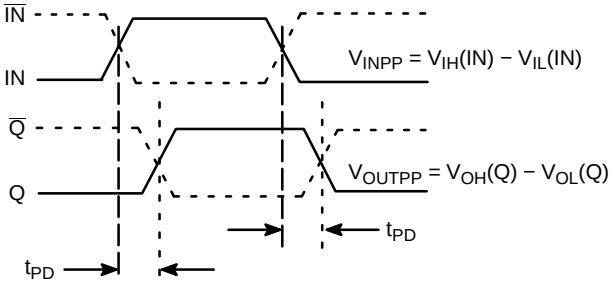

Figure 9. AC Reference Measurement

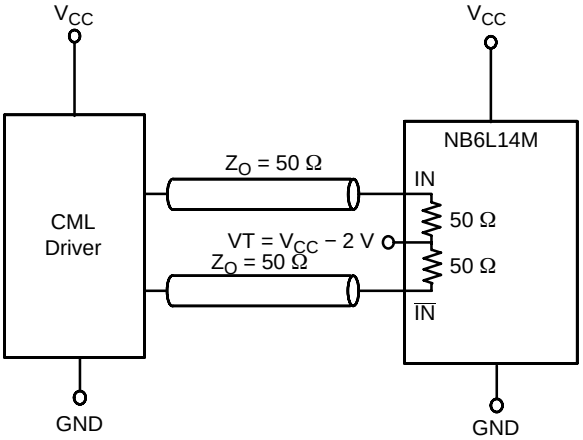

Figure 10. CML Interface

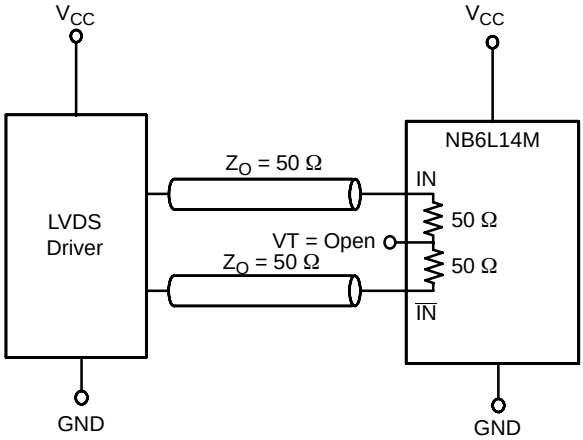

Figure 11. LVDS Interface

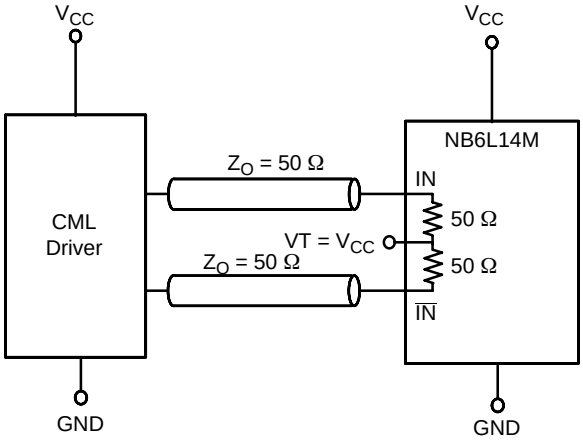

Figure 12. Standard 50 Ω Load CML Interface

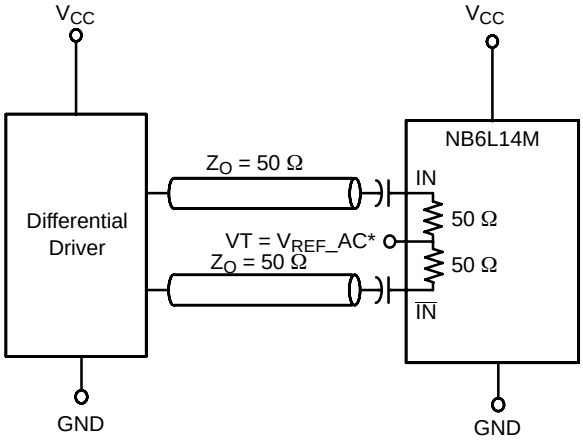

Figure 13. Capacitor−Coupled Differential Interface (VT Connected to V_{REFAC})

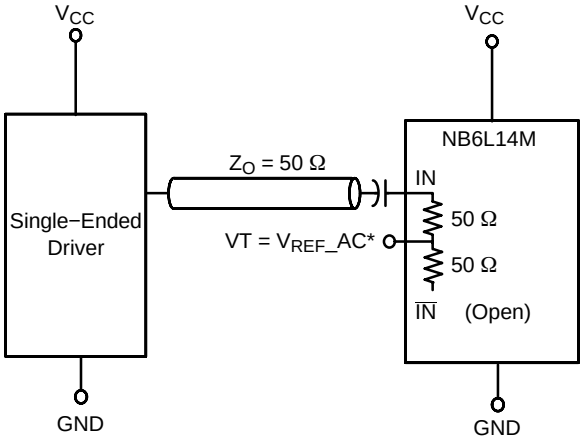

Figure 14. Capacitor−Coupled Single−Ended Interface (VT Connected to V_{REFAC})

*V_{REFAC} bypassed to ground with a 0.01 μF capacitor

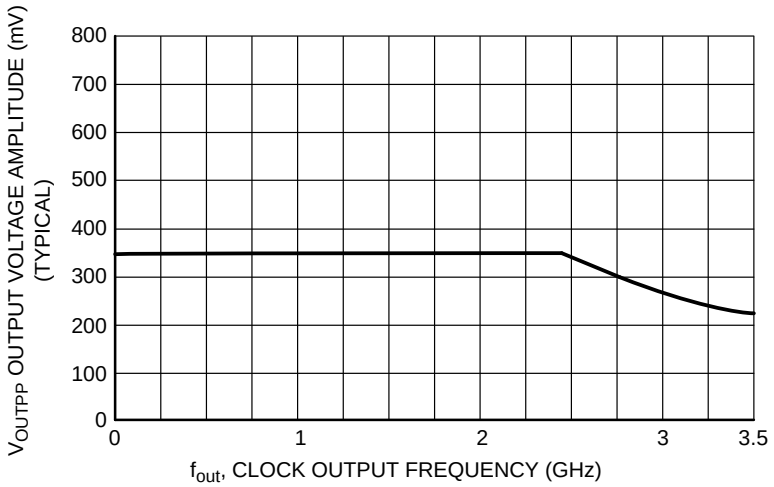

Figure 15. Output Voltage Amplitude (V_{OUTPP}) versus Output Frequency at Ambient Temperature (Typical)

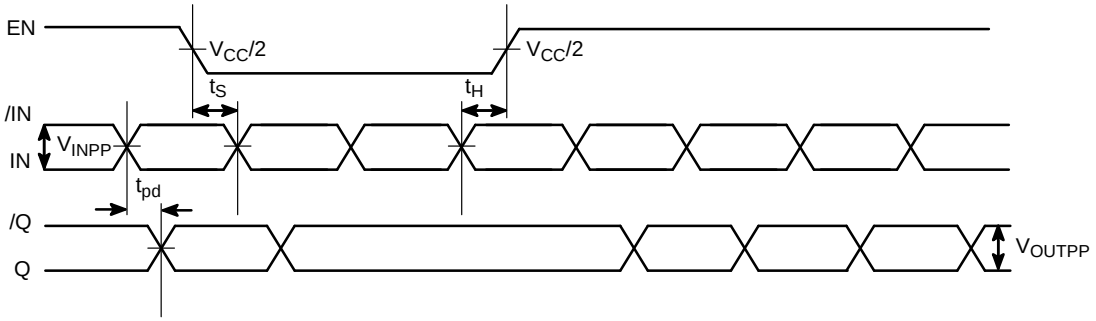

Figure 16. EN Timing Diagram

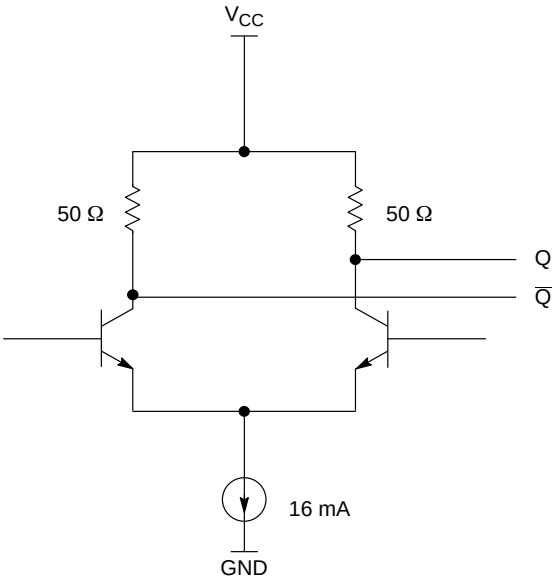

Figure 17. CML Output Structure

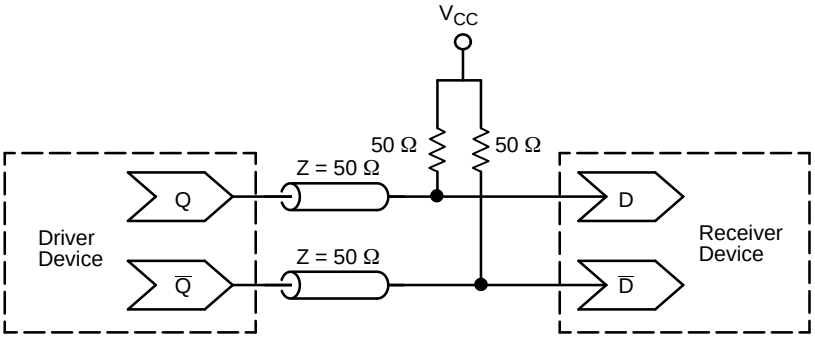

Figure 18. Typical CML Termination for Output Driver and Device Evaluation

ORDERING INFORMATION

Device	Package	Shipping†
NB6L14MMNG	QFN−16, 3x3 mm (Pb−Free)	123 Units / Rail
NB6L14MMNR2G	QFN−16, 3x3 mm (Pb−Free)	3000 / Tape & Reel

†For information on tape and reel specifications, including part orientation and tape sizes, please refer to our Tape and Reel Packaging Specifications Brochure, BRD8011/D.

ECLinPS MAX is trademark of Semiconductor Components Industries, LLC (SCILLC).

QFN16 3x3, 0.5P
CASE 485G
ISSUE G

1
SCALE 2:1

DATE 08 OCT 2021

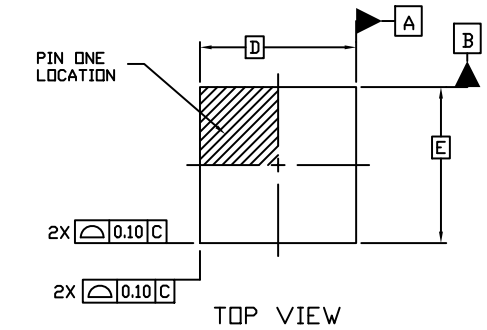

TOP VIEW

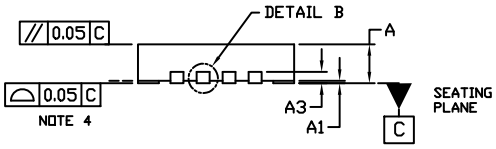

SIDE VIEW

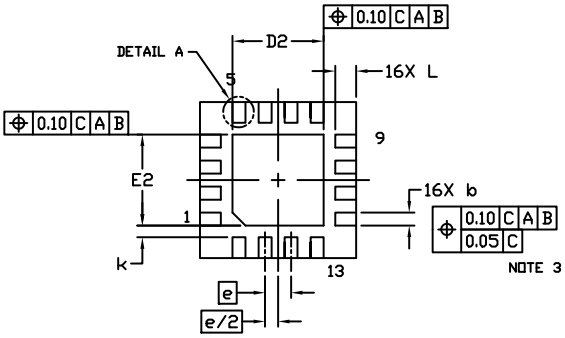

BOTTOM VIEW

NOTES:
1. DIMENSIONING AND TOLERANCING PER ASME Y14.5M, 1994.
2. CONTROLLING DIMENSION: MILLIMETERS
3. DIMENSION b APPLIES TO PLATED TERMINAL AND IS MEASURED BETWEEN 0.15 AND 0.30 MM FROM THE TERMINAL TIP.
4. COPLANARITY APPLIES TO THE EXPOSED PAD AS WELL AS THE TERMINALS.

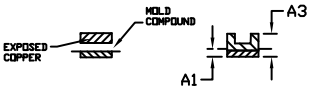

DETAIL B
ALTERNATE CONSTRUCTIONS

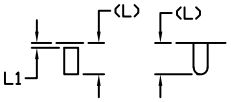

DETAIL A
ALTERNATE TERMINAL CONSTRUCTIONS

DIM	MILLIMETERS		
	MIN.	NOM.	MAX.
A	0.80	0.90	1.00
A1	0.00	0.03	0.05
A3	0.20 REF		
b	0.18	0.24	0.30
D	3.00 BSC		
D2	1.65	1.75	1.85
E	3.00 BSC		
E2	1.65	1.75	1.85
e	0.50 BSC		
k	0.18 TYP		
L	0.30	0.40	0.50
L1	0.00	0.08	0.15

MOUNTING FOOTPRINT

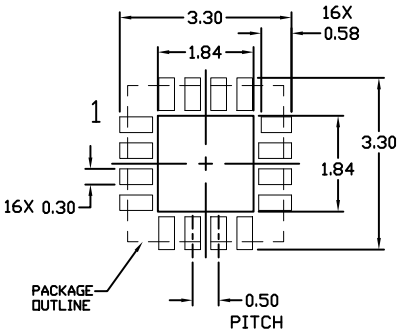

GENERIC MARKING DIAGRAM*

XXXXX = Specific Device Code
A = Assembly Location
L = Wafer Lot
Y = Year
W = Work Week
▪ = Pb−Free Package

(Note: Microdot may be in either location)

*This information is generic. Please refer to device data sheet for actual part marking. Pb−Free indicator, "G" or microdot "▪", may or may not be present. Some products may not follow the Generic Marking.

DOCUMENT NUMBER:	98AON04795D	Electronic versions are uncontrolled except when accessed directly from the Document Repository. Printed versions are uncontrolled except when stamped "CONTROLLED COPY" in red.
DESCRIPTION:	QFN16 3X3, 0.5P	PAGE 1 OF 1

onsemi and onsemi are trademarks of Semiconductor Components Industries, LLC dba **onsemi** or its subsidiaries in the United States and/or other countries. **onsemi** reserves the right to make changes without further notice to any products herein. **onsemi** makes no warranty, representation or guarantee regarding the suitability of its products for any particular purpose, nor does **onsemi** assume any liability arising out of the application or use of any product or circuit, and specifically disclaims any and all liability, including without limitation special, consequential or incidental damages. **onsemi** does not convey any license under its patent rights nor the rights of others.

onsemi, onsemi, and other names, marks, and brands are registered and/or common law trademarks of Semiconductor Components Industries, LLC dba "**onsemi**" or its affiliates and/or subsidiaries in the United States and/or other countries. **onsemi** owns the rights to a number of patents, trademarks, copyrights, trade secrets, and other intellectual property. A listing of **onsemi**'s product/patent coverage may be accessed at www.onsemi.com/site/pdf/Patent−Marking.pdf. **onsemi** reserves the right to make changes at any time to any products or information herein, without notice. The information herein is provided "as−is" and **onsemi** makes no warranty, representation or guarantee regarding the accuracy of the information, product features, availability, functionality, or suitability of its products for any particular purpose, nor does **onsemi** assume any liability arising out of the application or use of any product or circuit, and specifically disclaims any and all liability, including without limitation special, consequential or incidental damages. Buyer is responsible for its products and applications using **onsemi** products, including compliance with all laws, regulations and safety requirements or standards, regardless of any support or applications information provided by **onsemi**. "Typical" parameters which may be provided in **onsemi** data sheets and/or specifications can and do vary in different applications and actual performance may vary over time. All operating parameters, including "Typicals" must be validated for each customer application by customer's technical experts. **onsemi** does not convey any license under any of its intellectual property rights nor the rights of others. **onsemi** products are not designed, intended, or authorized for use as a critical component in life support systems or any FDA Class 3 medical devices or medical devices with a same or similar classification in a foreign jurisdiction or any devices intended for implantation in the human body. Should Buyer purchase or use **onsemi** products for any such unintended or unauthorized application, Buyer shall indemnify and hold **onsemi** and its officers, employees, subsidiaries, affiliates, and distributors harmless against all claims, costs, damages, and expenses, and reasonable attorney fees arising out of, directly or indirectly, any claim of personal injury or death associated with such unintended or unauthorized use, even if such claim alleges that **onsemi** was negligent regarding the design or manufacture of the part. **onsemi** is an Equal Opportunity/Affirmative Action Employer. This literature is subject to all applicable copyright laws and is not for resale in any manner.

ADDITIONAL INFORMATION

TECHNICAL PUBLICATIONS:
Technical Library: www.onsemi.com/design/resources/technical−documentation
onsemi Website: www.onsemi.com

ONLINE SUPPORT: www.onsemi.com/support
For additional information, please contact your local Sales Representative at
www.onsemi.com/support/sales