Thank you for your interest in **onsemi** products.

Your technical document begins on the following pages.

Your Feedback is Important to Us!

Please take a moment to participate in our short survey.
At **onsemi**, we are dedicated to delivering technical content that best meets your needs.

Help Us Improve – Take the Survey

This survey is intended to collect your feedback, capture any issues you may encounter, and to provide improvements you would like to suggest.

We look forward to your feedback.

To learn more about **onsemi**, please visit our website at
www.onsemi.com

onsemi and onsemi and other names, marks, and brands are registered and/or common law trademarks of Semiconductor Components Industries, LLC dba "**onsemi**" or its affiliates and/or subsidiaries in the United States and/or other countries. **onsemi** owns the rights to a number of patents, trademarks, copyrights, trade secrets, and other intellectual property. A listing of **onsemi** product/patent coverage may be accessed at www.onsemi.com/site/pdf/Patent-Marking.pdf. **onsemi** reserves the right to make changes at any time to any products or information herein, without notice. The information herein is provided "as-is" and **onsemi** makes no warranty, representation or guarantee regarding the accuracy of the information, product features, availability, functionality, or suitability of its products for any particular purpose, nor does **onsemi** assume any liability arising out of the application or use of any product or circuit, and specifically disclaims any and all liability, including without limitation special, consequential or incidental damages. Buyer is responsible for its products and applications using **onsemi** products, including compliance with all laws, regulations and safety requirements or standards, regardless of any support or applications information provided by **onsemi**. "Typical" parameters which may be provided in **onsemi** data sheets and/or specifications can and do vary in different applications and actual performance may vary over time. All operating parameters, including "Typicals" must be validated for each customer application by customer's technical experts. **onsemi** does not convey any license under any of its intellectual property rights nor the rights of others. **onsemi** products are not designed, intended, or authorized for use as a critical component in life support systems or any FDA Class 3 medical devices or medical devices with a same or similar classification in a foreign jurisdiction or any devices intended for implantation in the human body. Should Buyer purchase or use **onsemi** products for any such unintended or unauthorized application, Buyer shall indemnify and hold **onsemi** and its officers, employees, subsidiaries, affiliates, and distributors harmless against all claims, costs, damages, and expenses, and reasonable attorney fees arising out of, directly or indirectly, any claim of personal injury or death associated with such unintended or unauthorized use, even if such claim alleges that **onsemi** was negligent regarding the design or manufacture of the part. **onsemi** is an Equal Opportunity/Affirmative Action Employer. This literature is subject to all applicable copyright laws and is not for resale in any manner. Other names and brands may be claimed as the property of others.

TinyLogic UHS Buffer with Three-State Output

NC7SZ125

Description

The NC7SZ125 is a single buffer with three−state output from **onsemi**'s Ultra−High Speed (UHS) of TinyLogic. The device is fabricated with advanced CMOS technology to achieve ultra high speed with high output drive while maintaining low static power dissipation over a very broad V_{CC} operating range. The device is specified to operate over the 1.65 V to 5.5 V range. The inputs and output are high impedance above ground when V_{CC} is 0 V. Inputs tolerate voltages up to 5.5 V independent of V_{CC} operating voltage. The output tolerates voltages above V_{CC} when in the 3−STATE condition.

Features

- Ultra−High Speed: t_{PD} = 2.6 ns (Typical) into 50 pF at 5 V V_{CC}
- High Output Drive: ±24 mA at 3 V V_{CC}
- Broad V_{CC} Operating Range: 1.65 V to 5.5 V
- Matches Performance of LCX when Operated at 3.3 V V_{CC}
- Power Down High−Impedance Inputs / Outputs
- Over−Voltage Tolerance Inputs Facilitate 5 V to 3 V Translation
- Proprietary Noise / EMI Reduction Circuitry
- Ultra−Small MicroPak™ Packages
- Space−Saving SOT23−5, SC−74A and SC−88A Packages
- These Devices are Pb−Free, Halogen Free/BFR Free and are RoHS Compliant

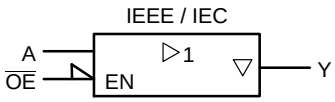

Figure 1. Logic Symbol

MARKING DIAGRAMS

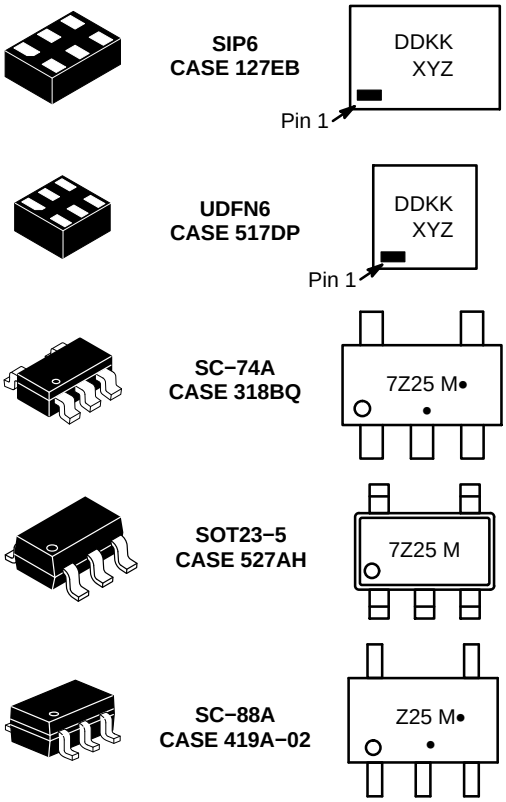

DD, 7Z25, Z25	= Specific Device Code
KK	= 2−Digit Lot Run Traceability Code
XY	= 2−Digit Date Code Format
Z	= Assembly Plant Code
M	= Date Code
•	= Pb−Free Package (Microdot may be in either location)

ORDERING INFORMATION

See detailed ordering, marking and shipping information in the package dimensions section on page 6 of this data sheet.

NOTE: Some of the devices on this data sheet have been **DISCONTINUED**. Please refer to the table on page 6.

© Semiconductor Components Industries, LLC, 1996

Pin Configurations

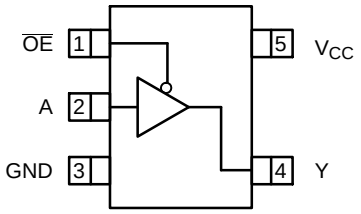

Figure 2. SOT23−5, SC−88A and SC−74A (Top View)

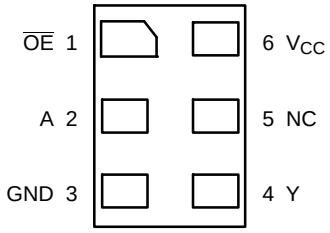

Figure 3. MicroPak (Top Through View)

PIN DEFINITIONS

Pin # SOT23−5 / SC−88A / SC74A	Pin # MicroPak	Name	Description
1	1	$\overline{OE}$	Input
2	2	A	Input
3	3	GND	Ground
4	4	Y	Output
5	6	V_{CC}	Supply Voltage
	5	NC	No Connect

FUNCTION TABLE

Inputs		Output
$\overline{OE}$	A	Y
L	L	L
L	H	H
H	X	Z

H = HIGH Logic Level
L = LOW Logic Level
X = HIGH or LOW Logic Level
Z = HIGH Impedance State

ABSOLUTE MAXIMUM RATINGS

Symbol	Parameter		Min	Max	Unit
V_{CC}	Supply Voltage		−0.5	6.5	V
V_{IN}	DC Input Voltage		−0.5	6.5	V
V_{OUT}	DC Output Voltage		−0.5	6.5	V
I_{IK}	DC Input Diode Current	V_{IN} < 0 V	−	−50	mA
I_{OK}	DC Output Diode Current	V_{OUT} < 0 V	−	−50	mA
I_{OUT}	DC Output Current		−	±50	mA
I_{CC} or I_{GND}	DC V_{CC} or Ground Current		−	±50	mA
T_{STG}	Storage Temperature Range		−65	+150	°C
T_J	Junction Temperature Under Bias		−	+150	°C
T_L	Junction Lead Temperature (Soldering, 10 Seconds)		−	+260	°C
P_D	Power Dissipation in Still Air	SC−74A / SOT23−5	−	390	mW
		SC−88A	−	332	
		MicroPak−6	−	812	
		MicroPak2™−6	−	812	
ESD	Human Body Model, JEDEC: JESD22−A114		−	4000	V
	Charge Device Model, JEDEC: JESD22−C101		−	2000	

Stresses exceeding those listed in the Maximum Ratings table may damage the device. If any of these limits are exceeded, device functionality should not be assumed, damage may occur and reliability may be affected.

RECOMMENDED OPERATING CONDITIONS

Symbol	Parameter	Conditions	Min	Max	Unit
V_{CC}	Supply Voltage Operating		1.65	5.50	V
	Supply Voltage Data Retention		1.50	5.50	
V_{IN}	Input Voltage		0	5.5	V
V_{OUT}	Output Voltage	Active State	0	V_{CC}	V
		Three−State	0	5.5	
T_A	Operating Temperature		−40	+85	°C
t_r, t_f	Input Rise and Fall Times	V_{CC} at 1.8 V, 2.5 V ±0.2 V	0	20	ns/V
		V_{CC} at 3.3 V ±0.3 V	0	10	
		V_{CC} at 5.0 V ±0.5 V	0	5	
θ_{JA}	Thermal Resistance	SC−74A / SOT23−5	−	320	°C/W
		SC−88A	−	377	
		MicroPak−6	−	154	
		MicroPak2−6	−	154	

Functional operation above the stresses listed in the Recommended Operating Ranges is not implied. Extended exposure to stresses beyond the Recommended Operating Ranges limits may affect device reliability.

1. Unused inputs must be held HIGH or LOW. They may not float.

DC ELECTRICAL CHARACTERISTICS

Symbol	Parameter	V_{CC} (V)	Conditions	T_A = +25°C			T_A = −40 to +85°C		Unit
				Min	Typ	Max	Min	Max	
V_{IH}	HIGH Level Input Voltage	1.65 to 1.95		0.65 V_{CC}	−	−	0.65 V_{CC}	−	V
		2.30 to 5.50		0.70 V_{CC}	−	−	0.70 V_{CC}	−	
V_{IL}	LOW Level Input Voltage	1.65 to 1.95		−	−	0.35 V_{CC}	−	0.35 V_{CC}	V
		2.30 to 5.50		−	−	0.30 V_{CC}	−	0.30 V_{CC}	
V_{OH}	HIGH Level Output Voltage	1.65	$V_{IN} = V_{IH}$ or V_{IL}, $I_{OH} = -100\ \mu A$	1.55	1.65	−	1.55	−	V
		1.80		1.70	1.80	−	1.70	−	
		2.30		2.20	2.30	−	2.20	−	
		3.00		2.90	3.00	−	2.90	−	
		4.50		4.40	4.50	−	4.40	−	
		1.65	$I_{OH} = -4$ mA	1.29	1.52	−	1.29	−	
		2.30	$I_{OH} = -8$ mA	1.90	2.15	−	1.90	−	
		3.00	$I_{OH} = -16$ mA	2.40	2.80	−	2.40	−	
		3.00	$I_{OH} = -24$ mA	2.30	2.68	−	2.30	−	
		4.50	$I_{OH} = -32$ mA	3.80	4.20	−	3.80	−	
V_{OL}	LOW Level Output Voltage	1.65	$V_{IN} = V_{IH}$ or V_{IL}, $I_{OL} = 100\ \mu A$	−	0.00	0.10	−	0.00	V
		1.80		−	0.00	0.10	−	0.10	
		2.30		−	0.00	0.10	−	0.10	
		3.00		−	0.00	0.10	−	0.10	
		4.50		−	0.00	0.10	−	0.10	
		1.65	$I_{OL} = 4$ mA	−	0.80	0.24	−	0.24	
		2.30	$I_{OL} = 8$ mA	−	0.10	0.30	−	0.30	
		3.00	$I_{OL} = 16$ mA	−	0.15	0.40	−	0.40	
		3.00	$I_{OL} = 24$ mA	−	0.22	0.55	−	0.55	
		4.50	$I_{OL} = 32$ mA	−	0.22	0.55	−	0.55	
I_{IN}	Input Leakage Current	1.65 to 5.5	$0 \geq V_{IN} \geq 5.5$ V	−	−	±1	−	±10	μA
I_{OZ}	3−STATE Output Leakage	0 to 5.5	$V_{IN} = V_{IH}$ or V_{IL} $0 \geq V_O \geq 5.5$ V	−	−	±1	−	±10	μA
I_{OFF}	Power Off Leakage Current	0	V_{IN} or $V_{OUT} = 5.5$ V	−	−	1	−	10	μA
I_{CC}	Quiescent Supply Current	1.65 to 5.50	$V_{IN} = 5.5$ V, GND	−	−	2	−	20	μA

AC ELECTRICAL CHARACTERISTICS

Symbol	Parameter	V_{CC} (V)	Conditions	T_A = +25°C			T_A = −40 to +85°C		Unit
				Min	Typ	Max	Min	Max	
t_{PLH}, t_{PHL}	Propagation Delay (Figure 4, 6)	1.65	C_L = 15 pF, R_D = 1 MΩ S_1=OPEN	−	6.4	13.2	−	13.8	ns
		1.80		−	5.3	11.0	−	11.5	
		2.50 ±0.20		−	3.4	7.5	−	8.0	
		3.30 ±0.30		−	2.5	5.2	−	5.5	
		5.00 ±0.50		−	2.1	4.5	−	4.8	
		3.30 ±0.30	C_L = 50 pF, R_D = 500 Ω S_1 = OPEN	−	3.2	5.7	−	6.0	
		5.00 ±0.50		−	2.6	5.0	−	5.3	
t_{PZL}, t_{PZH}	Output Enable Time (Figure 4, 6)	1.65	C_L = 50 pF, R_D = 500 Ω RU = 500 Ω S_1 = GND for t_{PZH} S_1 = V_{IN} for t_{PZL} V_{IN} = 2 · V_{CC}	−	8.4	15.0	−	15.6	ns
		1.80		−	7.0	12.5	−	13.0	
		2.50 ±0.20		−	4.6	8.5	−	9.0	
		3.30 ±0.30		−	3.5	6.2	−	6.5	
		5.00 ±0.50		−	2.8	5.5	−	5.8	
t_{PLZ}, t_{PHZ}	Output Disable Time (Figure 4, 6)	1.65	C_L = 50 pF, R_D = 500 Ω RU = 500 Ω S_1 = GND for t_{PHZ} S_1 = V_{IN} for t_{PLZ} V_{IN} = 2 · V_{CC}	−	6.5	13.2	−	14.5	
		1.80		−	5.4	11.0	−	12.0	
		2.50 ±0.20		−	3.5	8.0	−	8.5	
		3.30 ±0.30		−	2.8	5.7	−	6.0	
		5.00 ±0.50		−	2.1	4.7	−	5.0	
C_{IN}	Input Capacitance	0.00		−	4	−	−	−	pF
C_{OUT}	Output Capacitance	0.00		−	8	−	−	−	
C_{PD}	Power Dissipation Capacitance (Note 2) (Figure 5)	3.30		−	17	−	−	−	pF

2. C_{PD} is defined as the value of the internal equivalent capacitance which is derived from dynamic operating current consumption (I_{CCD}) at no output loading and operating at 50% duty cycle. C_{PD} is related to I_{CCD} dynamic operating current by the expression: I_{CCD} = (C_{PD}) (V_{CC}) (f_{IN}) + (I_{CC}static).

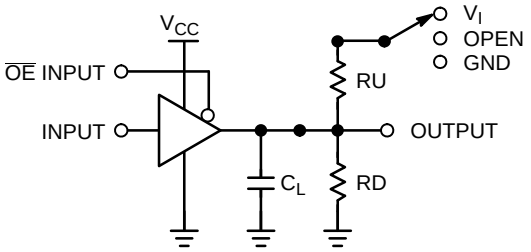

NOTE:
3. C_L includes load and stray capacitance; Input PRR = 1.0 MHz; t_W = 500 ns

Figure 4. AC Test Circuit

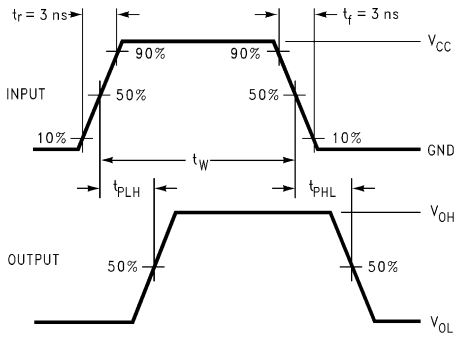

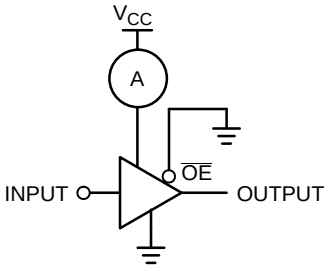

NOTE:
4. Input = AC Waveform; $t_r = t_f$ = 1.8 ns; PRR = 10 MHz; Duty Cycle = 50%.

Figure 5. I_{CCD} Test Circuit

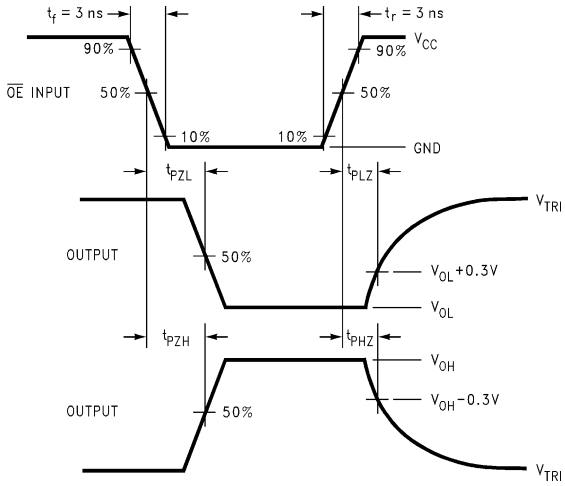

Figure 6. AC Waveforms

ORDERING INFORMATION

Part Number	Top Mark	Operating Temperature	Packages	Shipping†
NC7SZ125M5X	7Z25	−40 to +85°C	SC−74A	3000 / Tape & Reel
NC7SZ125P5X	Z25	−40 to +85°C	SC−88A	3000 / Tape & Reel
NC7SZ125L6X	DD	−40 to +85°C	MicroPak	5000 / Tape & Reel
NC7SZ125FHX	DD	−40 to +85°C	MicroPak2	5000 / Tape & Reel

DISCONTINUED (Note 5)

NC7SZ125M5X−L22090	7Z25	−40 to +85°C	SOT23−5	3000 / Tape & Reel
NC7SZ125P5X−F22057	Z25	−40 to +85°C	SC−88A	3000 / Tape & Reel
NC7SZ125L6X−L22175	DD	−40 to +85°C	MicroPak	5000 / Tape & Reel
NC7SZ125FHX−L22175	DD	−40 to +85°C	MicroPak2	5000 / Tape & Reel

†For information on tape and reel specifications, including part orientation and tape sizes, please refer to our Tape and Reel Packaging Specifications Brochure, BRD8011/D.

5. **DISCONTINUED:** These devices are not recommended for new design. Please contact your **onsemi** representative for information. The most current information on these devices may be available on www.onsemi.com.

MicroPak and MicroPak2 are trademarks of Semiconductor Components Industries, LLC dba "**onsemi**" or its affiliates and/or subsidiaries in the United States and/or other countries.

SIP6 1.45X1.0
CASE 127EB
ISSUE O

DATE 31 AUG 2016

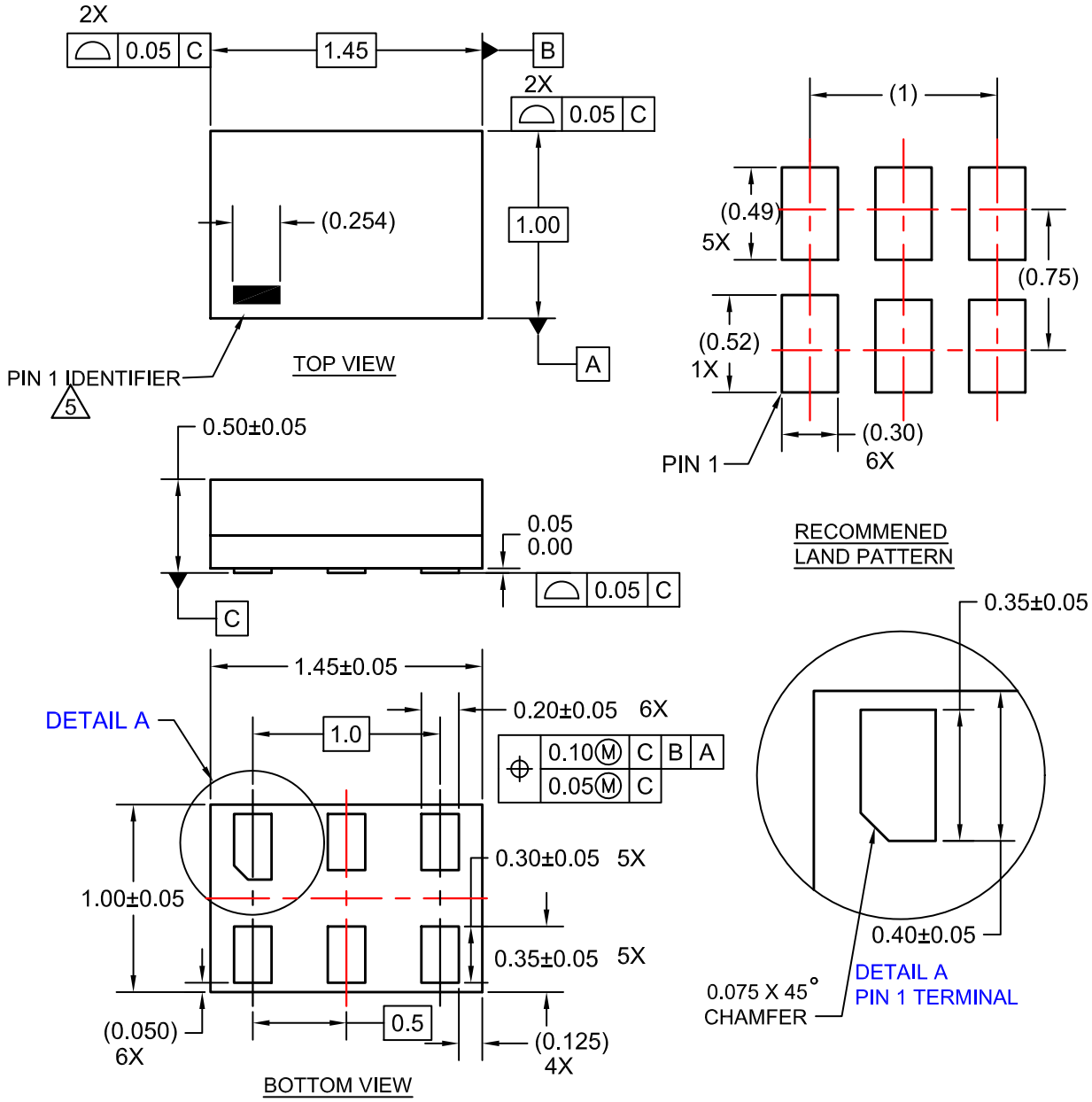

NOTES:

1. CONFORMS TO JEDEC STANDARD MO-252 VARIATION UAAD
2. DIMENSIONS ARE IN MILLIMETERS
3. DRAWING CONFORMS TO ASME Y14.5M-2009
4. PIN ONE IDENTIFIER IS 2X LENGTH OF ANY OTHER LINE IN THE MARK CODE LAYOUT.

DOCUMENT NUMBER:	**98AON13590G**	Electronic versions are uncontrolled except when accessed directly from the Document Repository. Printed versions are uncontrolled except when stamped "CONTROLLED COPY" in red.
DESCRIPTION:	**SIP6 1.45X1.0**	**PAGE 1 OF 1**

onsemi and onsemi are trademarks of Semiconductor Components Industries, LLC dba **onsemi** or its subsidiaries in the United States and/or other countries. **onsemi** reserves the right to make changes without further notice to any products herein. **onsemi** makes no warranty, representation or guarantee regarding the suitability of its products for any particular purpose, nor does **onsemi** assume any liability arising out of the application or use of any product or circuit, and specifically disclaims any and all liability, including without limitation special, consequential or incidental damages. **onsemi** does not convey any license under its patent rights nor the rights of others.

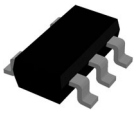

SC−74A−5 3.00x1.50x0.95, 0.95P
CASE 318BQ
ISSUE C

DATE 26 FEB 2024

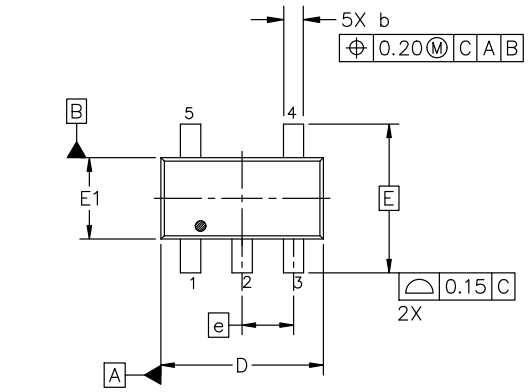

TOP VIEW

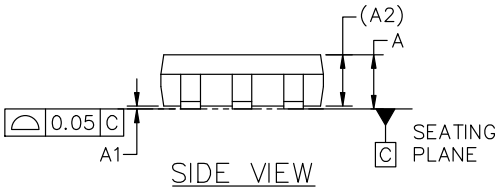

SIDE VIEW

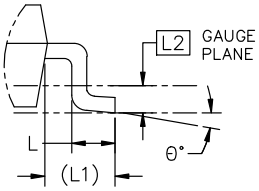

DETAIL "A"
SCALE 2:1

NOTES:

1. DIMENSIONING AND TOLERANCING CONFORM TO ASME Y14.5−2018.
2. ALL DIMENSION ARE IN MILLIMETERS (ANGLES IN DEGREES).
3. MAXIMUM LEAD THICKNESS INCLUDES LEAD FINISH THICKNESS. MINIMUM LEAD THICKNESS IS THE MINIMUM THICKNESS OF BASE MATERIAL.
4. DIMENSIONS D AND E1 DO NOT INCLUDE MOLD FLASH, PROTRUSIONS OF GATE BURRS. MOLD FLASH, PROTRUSIONS, OR GATE BURRS SHALL NOT EXCEED 0.15 PER SIDE.

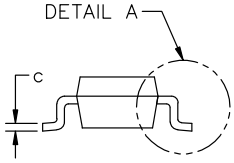

END VIEW

DIM	MILLIMETERS		
	MIN.	NOM.	MAX.
A	0.90	1.00	1.10
A1	0.01	0.18	0.10
A2	0.95 REF.		
b	0.25	0.37	0.50
c	0.10	0.18	0.26
D	2.85	3.00	3.15
E	2.75 BSC		
E1	1.35	1.50	1.65
e	0.95 BSC		
L	0.20	0.40	0.60
L1	0.62 REF.		
L2	0.25 BSC		
θ	0°	5°	10°

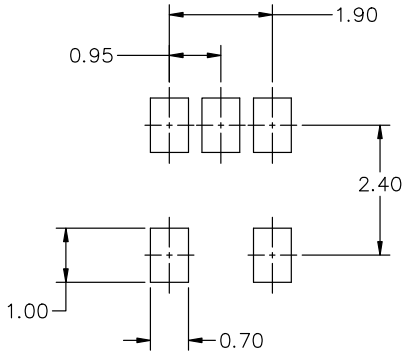

RECOMMENDED MOUNTING FOOTPRINT*

* FOR ADDITIONAL INFORMATION ON OUR Pb−FREE STRATEGY AND SOLDERING DETAILS, PLEASE DOWNLOAD THE ON SEMICONDUCTOR SOLDERING AND MOUNTING TECHNIQUES REFERENCE MANUAL, SOLDERRM/D.

GENERIC MARKING DIAGRAM*

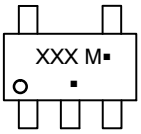

XXX = Specific Device Code
M = Date Code
▪ = Pb−Free Package

(Note: Microdot may be in either location)

*This information is generic. Please refer to device data sheet for actual part marking. Pb−Free indicator, "G" or microdot " ▪", may or may not be present. Some products may not follow the Generic Marking.

DOCUMENT NUMBER:	98AON66279G	Electronic versions are uncontrolled except when accessed directly from the Document Repository. Printed versions are uncontrolled except when stamped "CONTROLLED COPY" in red.	
DESCRIPTION:	SC−74A−5 3.00x1.50x0.95, 0.95P		PAGE 1 OF 1

onsemi and onsemi are trademarks of Semiconductor Components Industries, LLC dba **onsemi** or its subsidiaries in the United States and/or other countries. **onsemi** reserves the right to make changes without further notice to any products herein. **onsemi** makes no warranty, representation or guarantee regarding the suitability of its products for any particular purpose, nor does **onsemi** assume any liability arising out of the application or use of any product or circuit, and specifically disclaims any and all liability, including without limitation special, consequential or incidental damages. **onsemi** does not convey any license under its patent rights nor the rights of others.

SC−88A (SC−70−5/SOT−353)
CASE 419A−02
ISSUE M

SCALE 2:1

DATE 11 APR 2023

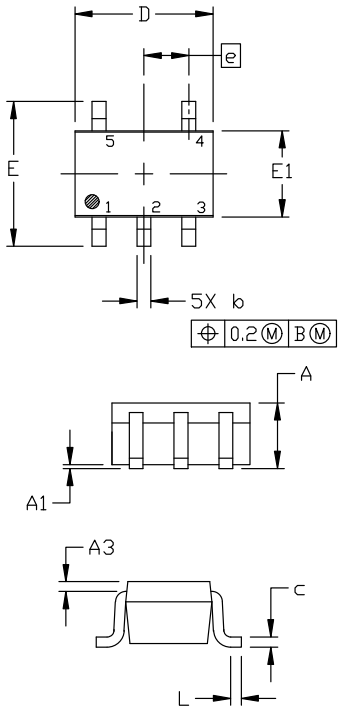

NOTES:

1. DIMENSIONING AND TOLERANCING PER ANSI Y14.5M, 1982.
2. CONTROLLING DIMENSION: MILLIMETERS
3. 419A−01 OBSOLETE. NEW STANDARD 419A−02
4. DIMENSIONS D AND E1 DO NOT INCLUDE MOLD FLASH, PROTRUSIONS, OR GATE BURRS. MOLD FLASH, PROTRUSIONS, OR GATE BURRS SHALL NOT EXCEED 0.1016MM PER SIDE.

DIM	MILLIMETERS		
	MIN.	NOM.	MAX.
A	0.80	0.95	1.10
A1	---	---	0.10
A3	0.20 REF		
b	0.10	0.20	0.30
c	0.10	---	0.25
D	1.80	2.00	2.20
E	2.00	2.10	2.20
E1	1.15	1.25	1.35
e	0.65 BSC		
L	0.10	0.15	0.30

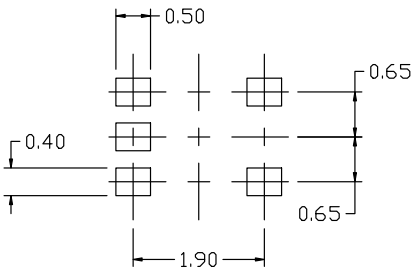

RECOMMENDED
MOUNTING FOOTPRINT

* For additional information on our Pb−Free strategy and soldering details, please download the ON Semiconductor Soldering and Mounting Techniques Reference Manual, SOLDERRM/D.

GENERIC MARKING DIAGRAM*

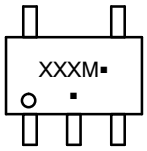

*This information is generic. Please refer to device data sheet for actual part marking. Pb−Free indicator, "G" or microdot "▪", may or may not be present. Some products may not follow the Generic Marking.

XXX = Specific Device Code
M = Date Code
▪ = Pb−Free Package
(Note: Microdot may be in either location)

STYLE 1:
PIN 1. BASE
2. EMITTER
3. BASE
4. COLLECTOR
5. COLLECTOR

STYLE 2:
PIN 1. ANODE
2. EMITTER
3. BASE
4. COLLECTOR
5. CATHODE

STYLE 3:
PIN 1. ANODE 1
2. N/C
3. ANODE 2
4. CATHODE 2
5. CATHODE 1

STYLE 4:
PIN 1. SOURCE 1
2. DRAIN 1/2
3. SOURCE 1
4. GATE 1
5. GATE 2

STYLE 5:
PIN 1. CATHODE
2. COMMON ANODE
3. CATHODE 2
4. CATHODE 3
5. CATHODE 4

STYLE 6:
PIN 1. EMITTER 2
2. BASE 2
3. EMITTER 1
4. COLLECTOR
5. COLLECTOR 2/BASE 1

STYLE 7:
PIN 1. BASE
2. EMITTER
3. BASE
4. COLLECTOR
5. COLLECTOR

STYLE 8:
PIN 1. CATHODE
2. COLLECTOR
3. N/C
4. BASE
5. EMITTER

STYLE 9:
PIN 1. ANODE
2. CATHODE
3. ANODE
4. ANODE
5. ANODE

Note: Please refer to datasheet for style callout. If style type is not called out in the datasheet refer to the device datasheet pinout or pin assignment.

DOCUMENT NUMBER:	98ASB42984B	Electronic versions are uncontrolled except when accessed directly from the Document Repository. Printed versions are uncontrolled except when stamped "CONTROLLED COPY" in red.
DESCRIPTION:	SC−88A (SC−70−5/SOT−353)	PAGE 1 OF 1

onsemi and onsemi are trademarks of Semiconductor Components Industries, LLC dba **onsemi** or its subsidiaries in the United States and/or other countries. **onsemi** reserves the right to make changes without further notice to any products herein. **onsemi** makes no warranty, representation or guarantee regarding the suitability of its products for any particular purpose, nor does **onsemi** assume any liability arising out of the application or use of any product or circuit, and specifically disclaims any and all liability, including without limitation special, consequential or incidental damages. **onsemi** does not convey any license under its patent rights nor the rights of others.

UDFN6 1.0X1.0, 0.35P
CASE 517DP
ISSUE O

DATE 31 AUG 2016

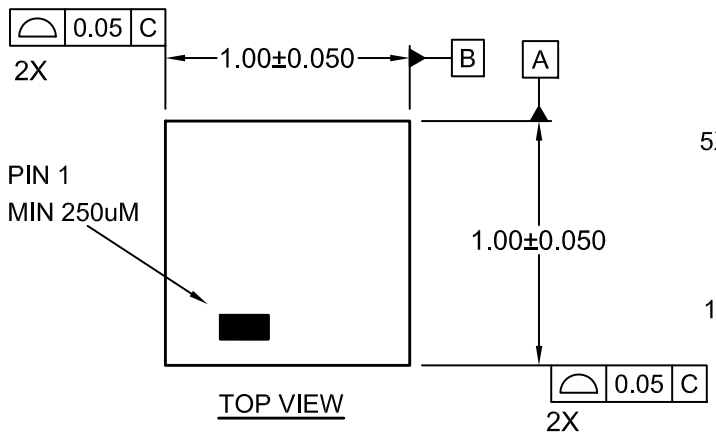

TOP VIEW

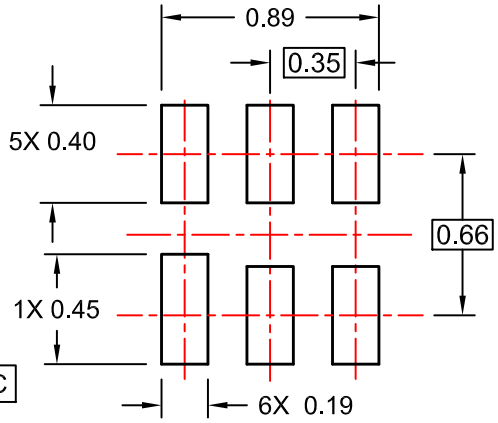

RECOMMENDED LAND PATTERN
FOR SPACE CONSTRAINED PCB

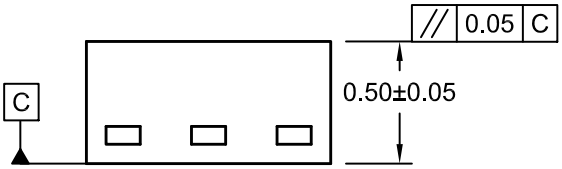

SIDE VIEW

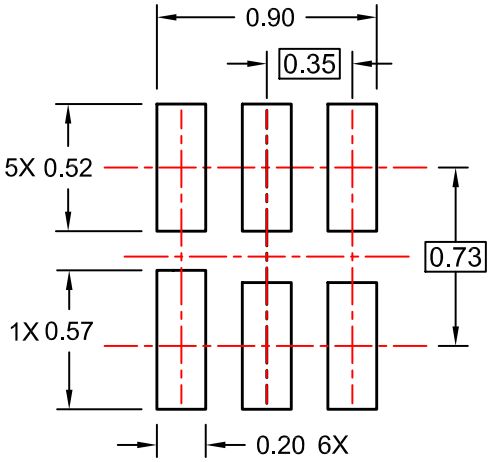

ALTERNATIVE LAND PATTERN
FOR UNIVERSAL APPLICATION

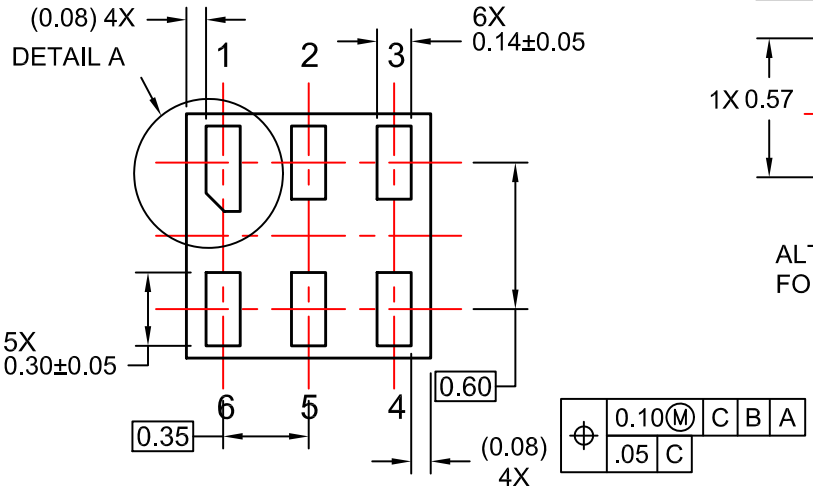

BOTTOM VIEW

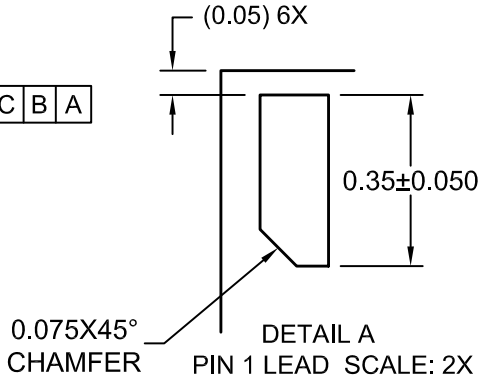

DETAIL A
PIN 1 LEAD SCALE: 2X

NOTES:

A. COMPLIES TO JEDEC MO-252 STANDARD
B. DIMENSIONS ARE IN MILLIMETERS.
C. DIMENSIONS AND TOLERANCES PER ASME Y14.5M, 2009

DOCUMENT NUMBER:	**98AON13593G**	Electronic versions are uncontrolled except when accessed directly from the Document Repository. Printed versions are uncontrolled except when stamped "CONTROLLED COPY" in red.
DESCRIPTION:	**UDFN6 1.0X1.0, 0.35P**	**PAGE 1 OF 1**

onsemi and onsemi are trademarks of Semiconductor Components Industries, LLC dba **onsemi** or its subsidiaries in the United States and/or other countries. **onsemi** reserves the right to make changes without further notice to any products herein. **onsemi** makes no warranty, representation or guarantee regarding the suitability of its products for any particular purpose, nor does **onsemi** assume any liability arising out of the application or use of any product or circuit, and specifically disclaims any and all liability, including without limitation special, consequential or incidental damages. **onsemi** does not convey any license under its patent rights nor the rights of others.

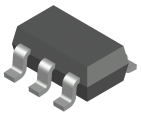

SOT−23, 5 Lead
CASE 527AH
ISSUE A

DATE 09 JUN 2021

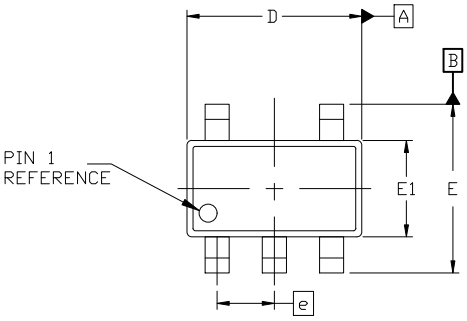

TOP VIEW

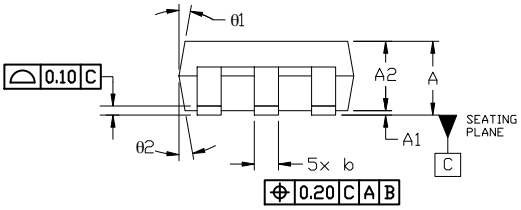

SIDE VIEW

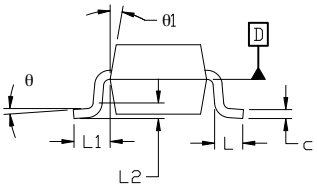

END VIEW

NOTES:

1. DIMENSIONING AND TOLERANCING PER ASME Y14.5M, 19894
2. CONTROLLING DIMENSION: MILLIMETERS
3. MAXIMUM LEAD THICKNESS INCLUDES LEAD FINISH THICKNESS. MINIMUM LEAD THICKNESS IS THE MINIMUM THICKNESS OF THE BASE MATERIAL.
4. DIMENSIONS D AND E1 DO NOT INCLUDE MOLD FLASH, PROTRUSIONS, OR GATE BURRS. MOLD FLASH, PROTRUSIONS, OR GATE BURRS SHALL NOT EXCEED 0.25 PER SIDE. D AND E1 DIMENSIONS ARE DETERMINED AT DATUM D.
5. DIMENSION 'b' DOES NOT INCLUDE DAMBAR PROTRUSION. ALLOWABLE DAMBAR PROTRUSION SHALL BE 0.08mm TOTAL IN EXCESS OF THE 'b' DIMENSION AT MAXIMUM MATERIAL CONDITION. MINIMUM SPACE BETWEEN PROTRUSION AND AN ADJACENT LEAD SHALL NOT BE LESS THAN 0.07mm.

	MILLIMETERS		
DIM	MIN.	NOM.	MAX.
A	0.90	—	1.45
A1	0.00	—	0.15
A2	0.90	1.15	1.30
b	0.30	—	0.50
c	0.08	—	0.22
D	2.90 BSC		
E	2.80 BSC		
E1	1.60 BSC		
e	0.95 BSC		
L	0.30	0.45	0.60
L1	0.60 REF		
L2	0.25 REF		
θ	0°	4°	8°
θ1	0°	10°	15°
θ2	0°	10°	15°

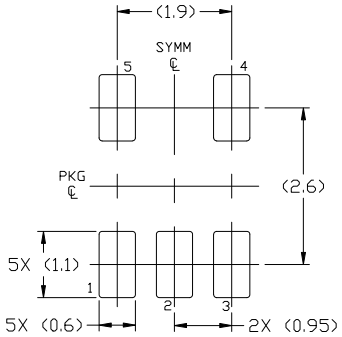

RECOMMENDED MOUNTING FOOTPRINT

For additional information on our Pb-Free strategy and soldering details, please download the ON Semiconductor Soldering and Mounting Techniques Reference Manual, SOLDERRM/D.

GENERIC MARKING DIAGRAM*

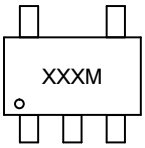

XXX = Specific Device Code
M = Date Code

*This information is generic. Please refer to device data sheet for actual part marking. Pb−Free indicator, "G" or microdot "▪", may or may not be present. Some products may not follow the Generic Marking.

DOCUMENT NUMBER:	98AON34320E	Electronic versions are uncontrolled except when accessed directly from the Document Repository. Printed versions are uncontrolled except when stamped "CONTROLLED COPY" in red.
DESCRIPTION:	SOT−23, 5 LEAD	PAGE 1 OF 1

onsemi and onsemi are trademarks of Semiconductor Components Industries, LLC dba **onsemi** or its subsidiaries in the United States and/or other countries. **onsemi** reserves the right to make changes without further notice to any products herein. **onsemi** makes no warranty, representation or guarantee regarding the suitability of its products for any particular purpose, nor does **onsemi** assume any liability arising out of the application or use of any product or circuit, and specifically disclaims any and all liability, including without limitation special, consequential or incidental damages. **onsemi** does not convey any license under its patent rights nor the rights of others.

onsemi, onsemi, and other names, marks, and brands are registered and/or common law trademarks of Semiconductor Components Industries, LLC dba "**onsemi**" or its affiliates and/or subsidiaries in the United States and/or other countries. **onsemi** owns the rights to a number of patents, trademarks, copyrights, trade secrets, and other intellectual property. A listing of **onsemi**'s product/patent coverage may be accessed at www.onsemi.com/site/pdf/Patent−Marking.pdf. **onsemi** reserves the right to make changes at any time to any products or information herein, without notice. The information herein is provided "as−is" and **onsemi** makes no warranty, representation or guarantee regarding the accuracy of the information, product features, availability, functionality, or suitability of its products for any particular purpose, nor does **onsemi** assume any liability arising out of the application or use of any product or circuit, and specifically disclaims any and all liability, including without limitation special, consequential or incidental damages. Buyer is responsible for its products and applications using **onsemi** products, including compliance with all laws, regulations and safety requirements or standards, regardless of any support or applications information provided by **onsemi**. "Typical" parameters which may be provided in **onsemi** data sheets and/or specifications can and do vary in different applications and actual performance may vary over time. All operating parameters, including "Typicals" must be validated for each customer application by customer's technical experts. **onsemi** does not convey any license under any of its intellectual property rights nor the rights of others. **onsemi** products are not designed, intended, or authorized for use as a critical component in life support systems or any FDA Class 3 medical devices or medical devices with a same or similar classification in a foreign jurisdiction or any devices intended for implantation in the human body. Should Buyer purchase or use **onsemi** products for any such unintended or unauthorized application, Buyer shall indemnify and hold **onsemi** and its officers, employees, subsidiaries, affiliates, and distributors harmless against all claims, costs, damages, and expenses, and reasonable attorney fees arising out of, directly or indirectly, any claim of personal injury or death associated with such unintended or unauthorized use, even if such claim alleges that **onsemi** was negligent regarding the design or manufacture of the part. **onsemi** is an Equal Opportunity/Affirmative Action Employer. This literature is subject to all applicable copyright laws and is not for resale in any manner.

ADDITIONAL INFORMATION

TECHNICAL PUBLICATIONS:
Technical Library: www.onsemi.com/design/resources/technical−documentation
onsemi Website: www.onsemi.com

ONLINE SUPPORT: www.onsemi.com/support
For additional information, please contact your local Sales Representative at
www.onsemi.com/support/sales