5 kV_{rms} 4.5-A/9-A Isolated Dual Channel Gate Driver

NCP51560

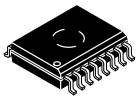

SOIC−16 WB
CASE 751G−03

The NCP51560 are isolated dual−channel gate drivers with 4.5−A/9−A source and sink peak current respectively. They are designed for fast switching to drive power MOSFETs, and SiC MOSFET power switches. The NCP51560 offers short and matched propagation delays.

Two independent and 5 kV_{rms} internal galvanic isolation from input to each output and internal functional isolation between the two output drivers allows a working voltage of up to 1500 V_{DC}. This driver can be used in any possible configurations of two low side, two high−side switches or a half−bridge driver with programmable dead time.

An ENA/DIS pin shutdowns both outputs simultaneously when set low or high for ENABLE or DISABLE mode respectively. The NCP51560 offers other important protection functions such as independent under−voltage lockout for both gate drivers and a Dead Time adjustment function

Features

- Flexible: Dual Low−Side, Dual High−Side or Half−Bridge Gate Driver
- 4.5 A Peak Source, 9 A Peak Sink Output Current Capability
- Independent UVLO Protections for Both Output Drivers
- Output Supply Voltage from 6.5 V to 30 V with 5−V and 8−V for MOSFET, 13−V and 17−V UVLO for SiC, Thresholds.
- Common Mode Transient Immunity CMTI > 200 V/ns
- Propagation Delay Typical 38 ns with
  - 5 ns Max Delay Matching per Channel
  - 5 ns Max Pulse−Width Distortion
- User Programmable Input Logic
  - DISABLE Mode
- User Programmable Dead−Time
- Isolation & Safety
  - 5 kV_{rms} Isolation for 1 Minute (per UL1577 Requirements)
  - 8000 V_{PK} Reinforced Isolation Voltage (per VDE0884−11 Requirements)
  - CQC Certification per GB4943.1−2011
  - SGS FIMO Certification per IEC 62386−1
- These are Pb−Free Devices

Typical Applications

- Motor Drives
- Isolated Converters in DC−DC and AC−DC Power Supply
- Server, Telecom, and Industrial Infrastructures

MARKING DIAGRAM

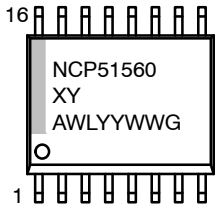

NCP51560	= Specific Device Code
X	= A or B or C or D for UVLO Option
Y	= A or B for ENABLE/DISABLE
A	= Assembly Location
WL	= Wafer Lot
YY	= Year
WW	= Work Week
G	= Pb−Free Package

PIN ASSIGNMENT

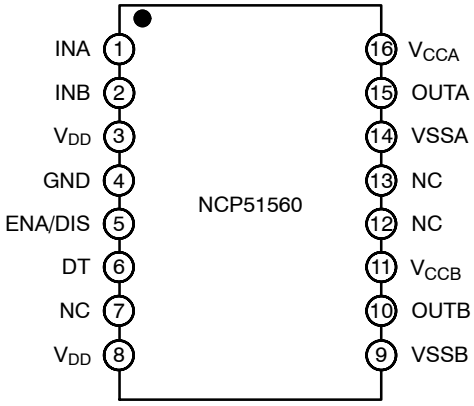

ORDERING INFORMATION

See detailed ordering and shipping information on page 28 of this data sheet.

© Semiconductor Components Industries, LLC, 2021

TYPICAL APPLICATION CIRCUIT

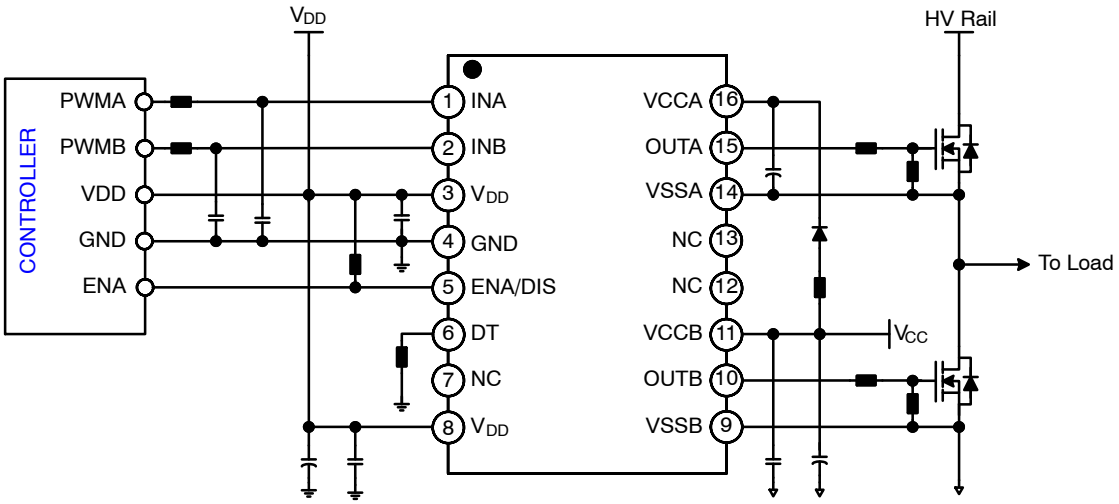

(a) High and Low Side MOSFET Gate Drive for ENABLE Version

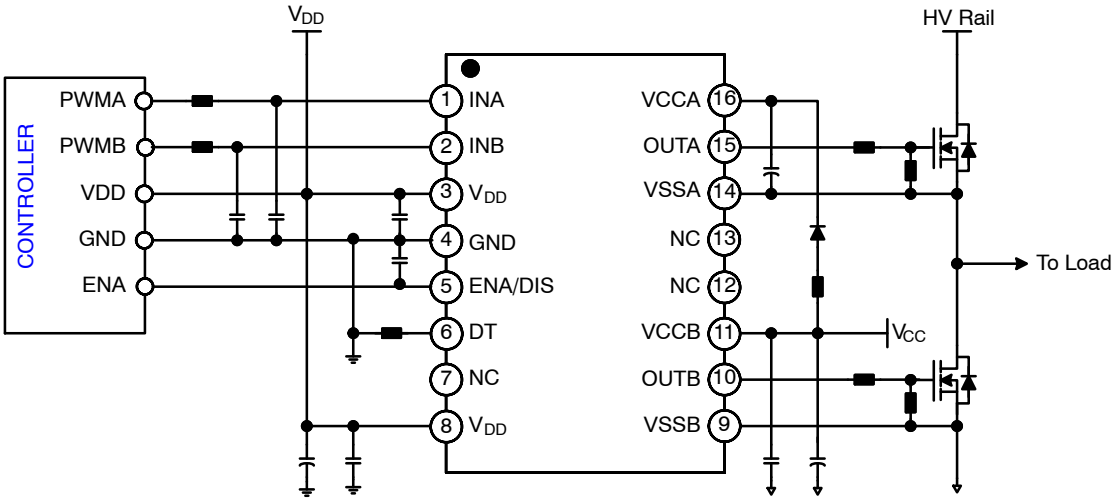

(b) High and Low Side MOSFET Gate Drive for DISABLE Version

Figure 1. Application Schematic

FUNCTIONAL BLOCK DIAGRAM

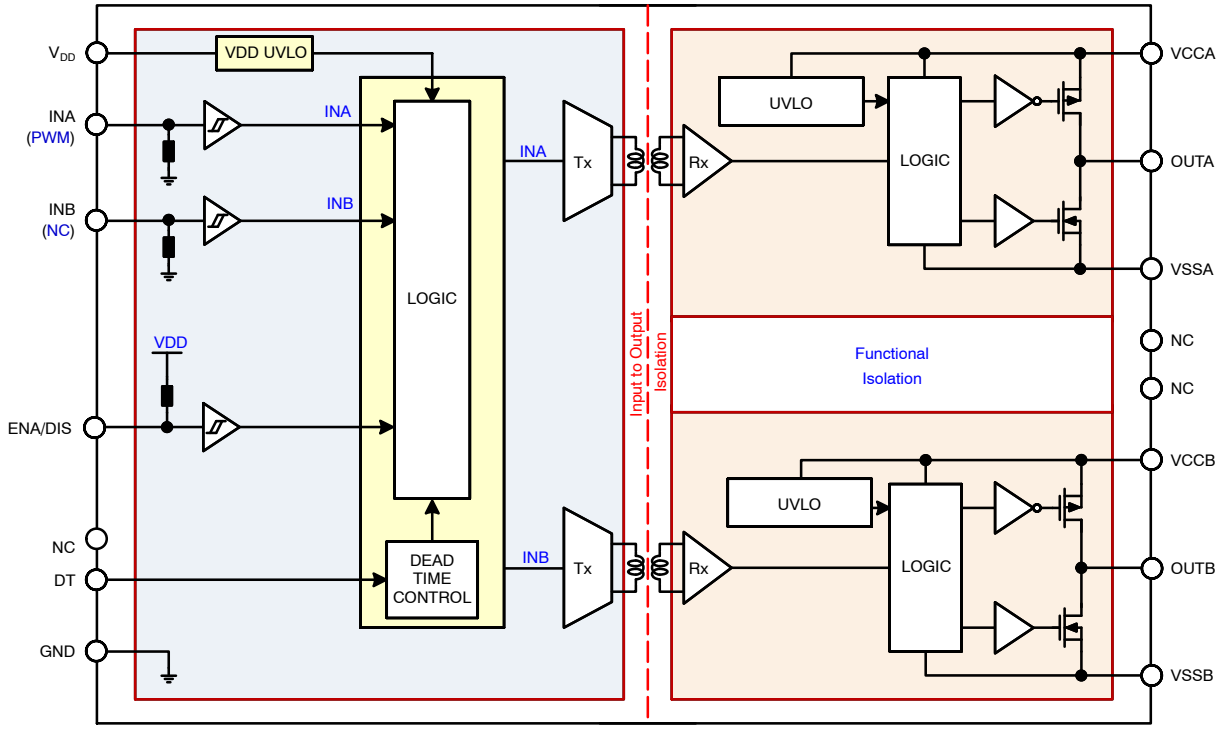

(a) For Only ENABLE (NCP51560xA) Version

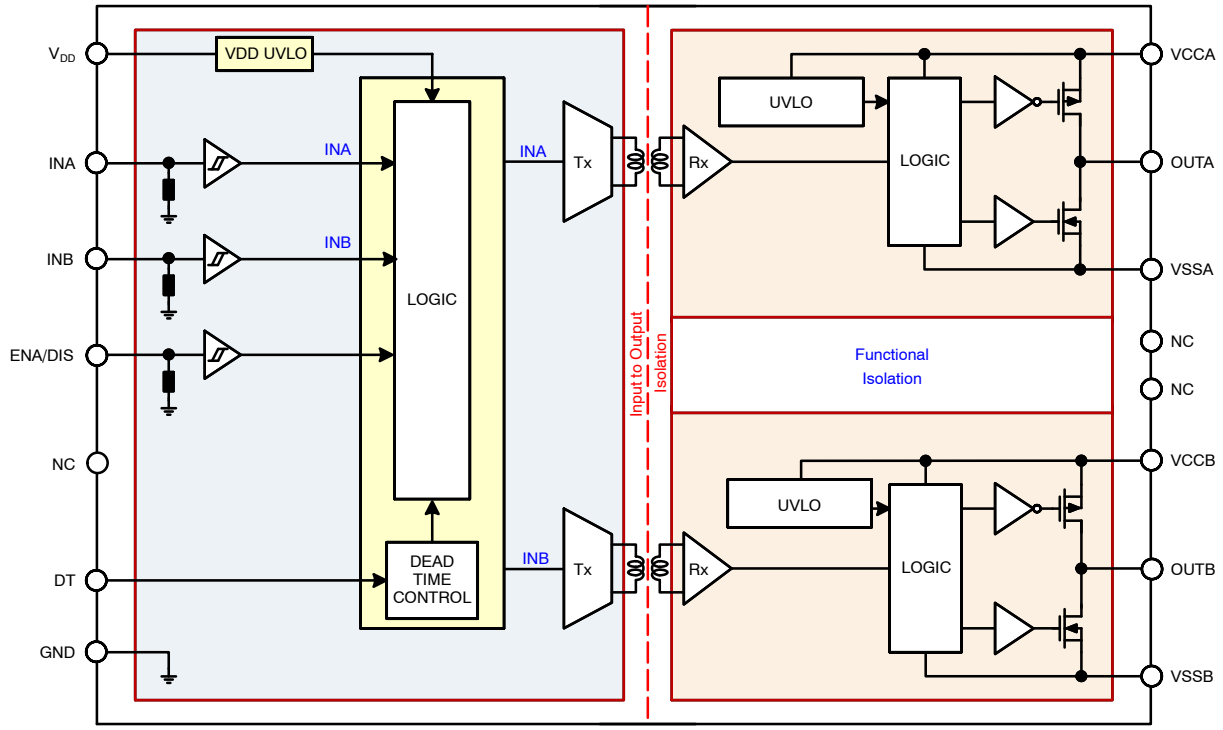

(b) For Only DISABLE (NCP51560xB) Version

Figure 2. Simplified Block Diagram

FUNCTIONAL TABLE

INPUT				UVLO			GATE DRIVE OUTPUT	
ENA/DIS (Note 3)					Output Side			
ENABLE	DISABLE	INA	INB	Input Side (V_{DD})	Channel A (V_{CCA})	Channel B (V_{CCB})	OUTA	OUTB
X	X	X	X	Active	X	X	L	L
X	X	X	X	X	Active	Active	L	L
H	L	X	L	Inactive	Active	Inactive	L	L
H	L	X	H	Inactive	Active	Inactive	L	H
H	L	L	X	Inactive	Inactive	Active	L	L
H	L	H	X	Inactive	Inactive	Active	H	L
L	H	X	X	Inactive	Inactive	Inactive	L	L
H	L	L	L	Inactive	Inactive	Inactive	L	L
H	L	L	H	Inactive	Inactive	Inactive	L	H
H	L	H	H	Inactive	Inactive	Inactive	L (Note 4)	L (Note 4)
				Inactive	Inactive	Inactive	H (Note 5)	H (Note 5)

1. “L” means that LOW, “H” means that HIGH and X: Any Status
2. Inactive means that V_{DD}, V_{CCA}, and V_{CCB} are above UVLO threshold voltage (Normal operation)
   Active means that UVLO disables the gate driver output stage.
3. Disables both gate drive output when the ENA/DIS pin is LOW in ENABLE version, which is default is HIGH, if this pin is open.
   Enables both gate drive output when the ENA/DIS pin is LOW in DISABLE version, which is default is LOW, if this pin is open.
4. DT pin is left open or programmed with R_{DT}.
5. DT pin pulled to V_{DD}.

PIN CONNECTIONS

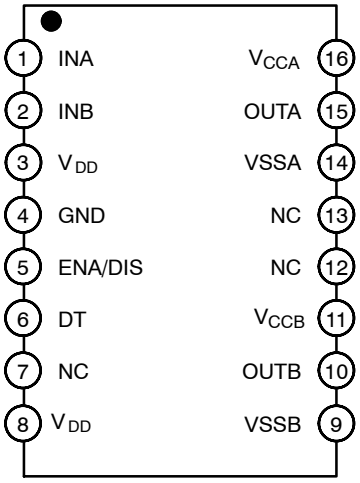

Figure 3. Pin Connections – SOIC−16 WB (Top View)

PIN DESCRIPTION

Pin No.	Symbol	I/O	Description
1	INA	Input	Logic Input for Channel A with internal pull−down resistor to GND
2	INB	Input	Logic Input for Channel B with internal pull−down resistor to GND.
3, 8	V_{DD}	Power	Input−side Supply Voltage. It is recommended to place a bypass capacitor from V_{DD} to GND.
4	GND	Power	Ground Input−side. (all signals on input−side are referenced to this pin)
5	ENA/DIS	Input	Logic Input High Enables Both Output Channels with Internal pull−up resistor for an ENABLE version. Conversely, Logic Input High disables Both Output Channels with Internal pull−down resistor for the DISABLE version.
6	DT	Input	Input for programmable Dead−Time It provides three kind of operating modes according to the DT pin voltage as below. **Mode−A**: Cross−conduction both channel outputs is not allowed even though dead−time is less than maximum 20 ns when the DT pin is floating (Open). **Mode−B**: Dead−time is adjusted according to an external resistance (R_{DT}). t_{DT} (in ns) = 10 x R_{DT} (in kΩ) Recommended dead−time resistor (R_{DT}) values are between 1 kΩ and 300 kΩ. **MODE−C**: Cross−conduction both channel outputs is allowed when the DT pin pulled to V_{DD}.
7	NC	–	No Connection; Keep pin floating.
9	VSSB	Power	Ground for Channel B
10	OUTB	Output	Output for Channel B
11	V_{CCB}	Power	Supply Voltage for Output Channel B. It is recommended to place a bypass capacitor from V_{CCB} to VSSB.
12, 13	NC	–	No Connection; Keep pin floating
14	VSSA	Power	Ground for Channel A
15	OUTA	Output	Output of Channel A
16	V_{CCA}	Power	Supply Voltage for Output Channel A. It is recommended to place a bypass capacitor from V_{CCA} to VSSA.

SAFETY AND INSULATION RATINGS

Symbol	Parameter		Min.	Typ.	Max.	Unit
	Installation Classifications per DIN VDE 0110/1.89 Table 1 Rated Mains Voltage	< 150 V_{RMS}	–	I–IV	–	–
		< 300 V_{RMS}		I–IV	–	–
		< 450 V_{RMS}		I–IV	–	–
		< 600 V_{RMS}		I–IV	–	–
		< 1000 V_{RMS}		I–III	–	–
CTI	Comparative Tracking Index (DIN IEC 112/VDE 0303 Part 1)		600	–	–	–
	Climatic Classification			40/125/21	–	–
	Pollution Degree (DIN VDE 0110/1.89)			2	–	–
V_{PR}	Input – to – Output Test Voltage, Method b, $V_{IORM} \times 1.875 = V_{PR}$, 100% Production Test with t_m = 1 s, Partial Discharge < 5 pC		2250	–	–	V_{PK}
V_{IORM}	Maximum Repetitive Peak Isolation Voltage		1200	–	–	V_{PK}
V_{IOWM}	Maximum Working Isolation Voltage		1200	–	–	V_{DC}
V_{IOTM}	Maximum Transient Isolation Voltage		8000	–	–	V_{PK}
E_{CR}	External Creepage		8.0	–	–	mm
E_{CL}	External Clearance		8.0	–	–	mm
DTI	Insulation Thickness		17.3	–	–	μm
R_{IO}	Insulation Resistance at T_S, V_{IO} = 500 V		10^9	–	–	Ω

UL1577

V_{ISO}	Withstand isolation voltage	$V_{TEST} = V_{ISO}$ = 5000 V_{RMS}, t = 60 sec. (qualification), $V_{TEST} = 1.2 \times V_{ISO}$ = 6000 V_{RMS}, t = 1 sec (100% production)	5000	–	–	V_{RMS}

SAFETY LIMITING VALUE

Symbol	Parameter		Side	Min	Typ	Max	Unit
P_S	Safety Supply Power	Maximum Values in Failure; Input Power	$P_{S,INPUT}$	–	–	88	mW
		Maximum Values in Failure; Output Power	$P_{S,OUT}$	–	–	1412	
		Maximum Values in Failure; Total Power	$P_{S,TOTAL}$	–	–	1500	
T_S	Safety Temperature	Maximum Values in Failure; Case Temperature		–	–	150	°C

MAXIMUM RATINGS

Symbol		Parameter	Min	Max	Unit
V_{DD} to GND		Power Supply Voltage – Input Side (Note 7)	−0.3	5.5	V
V_{CCA} – VSSA, V_{CCB} – VSSB		Power Supply Voltage – Driver Side (Note 8)	−0.3	33	V
OUTA to VSSA, OUTB to VSSB		Driver Output Voltage (Note 8)	−0.3	V_{CCA} + 0.3, V_{CCB} + 0.3	V
OUTA to VSSA, OUTB to VSSB, Transient for 200 ns (Note 9)			−2	V_{CCA} + 0.3, V_{CCB} + 0.3	V
INA and INB		Input Signal Voltages (Note 7)	−5	20	V
ENA/DIS		Input Signal Voltages (Note 7)	−0.3	5.5	V
ENA/DIS Transient for 50ns (Note 9)			−5	5.5	V
DT		Dead Time Control (Note 7)	−0.3	V_{DD} + 0.3	V
VSSA−VSSB, VSSB−VSSA		Channel to Channel Voltage	1500	–	V
T_J		Junction Temperature	−40	+150	°C
T_S		Storage Temperature	−65	+150	°C
Electrostatic Discharge Capability	HBM (Note 10)	Human Body Model	–	±2	kV
	CDM (Note 10)	Charged Device Model	–	±1	kV

Stresses exceeding those listed in the Maximum Ratings table may damage the device. If any of these limits are exceeded, device functionality should not be assumed, damage may occur and reliability may be affected.

6. Refer to ELECTRICAL CHARACTERISTICS, RECOMMENDED OPERATING RANGES and/or APPLICATION INFORMATION for Safe Operating parameters.
7. All voltage values are given with respect to GND pin.
8. All voltage values are given with respect to VSSA or VSSB pin.
9. This parameter verified by design and bench test, not tested in production.
10. This device series incorporates ESD protection and is tested by the following methods:
    ESD Human Body Model tested per AEC−Q100−002 (EIA/JESD22−A114)
    ESD Charged Device Model tested per AEC−Q100−011 (EIA/JESD22−C101)
    Latch up Current Maximum Rating: ≤100 mA per JEDEC standard: JESD78F.

RECOMMENDED OPERATING CONDITIONS

Symbol	Rating		Min	Max	Unit
V_{DD}	Power Supply Voltage – Input Side		3.0	5.0	V
V_{CCA}, V_{CCB}	Power Supply Voltage – Driver Side	5–V UVLO Version	6.5	30	V
		8–V UVLO Version	9.5	30	V
		13–V UVLO Version	14.5	30	V
		17–V UVLO Version	18.5	30	V
V_{IN}	Logic Input Voltage at Pins INA, and INB		0	18	V
$V_{ENA/DIS}$	Logic Input Voltage at Pin ENA/DIS		0	5.0	V
T_A	Ambient Temperature		–40	+125	°C
T_J	Junction Temperature		–40	+125	°C

Functional operation above the stresses listed in the Recommended Operating Ranges is not implied. Extended exposure to stresses beyond the Recommended Operating Ranges limits may affect device reliability.

THERMAL CHARACTERISTICS

Symbol	Rating	Condition	Value	Unit
$R_{\theta JA}$	Thermal Characteristics, (Note 12) Thermal Resistance Junction–Air 16–SOIC–WB	100 mm^2, 1 oz Copper, 1 Surface Layer (1S0P) 100 mm^2, 2 oz Copper, 1 Surface Layer (1S0P)	120 81	°C/W
$R_{\theta JC}$	Thermal Resistance Junction–Case	100 mm^2, 1 oz Copper, 1 Surface Layer (1S0P)	38	°C/W
Ψ_{JT}	Thermal Resistance Junction–to–Top		18	°C/W
Ψ_{JB}	Thermal Resistance Junction–to–Board		55	°C/W
P_D	Power Dissipation (Note 12) 16–SOIC–WB	100 mm^2, 1 oz Copper, 1 Surface Layer (1S0P) 100 mm^2, 2 oz Copper, 1 Surface Layer (1S0P)	0.8 1.5	W

11. Refer to ELECTRICAL CHARACTERISTICS, RECOMMENDED OPERATING RANGES and/or APPLICATION INFORMATION for Safe Operating parameters.
12. JEDEC standard: JESD51–2, and JESD51–3.

ISOLATION CHARACTERISTICS

Symbol	Parameter	Condition	Min	Typ	Max	Unit
$V_{ISO,INPUT\ TO\ OUTPUT}$	Input to Output Isolation Voltage	T_A = 25°C, Relative Humidity < 50%, t = 1.0 minute, I_{I-O} 10 A, 50 Hz (Notes 13, 14, 15)	5000	–	–	V_{RMS}
$V_{ISO,OUTA\ TO\ OUTB}$	OUTA to OUTB Isolation Voltage		1500	–	–	V_{DC}
R_{ISO}	Isolation Resistance	V_{I_O} = 500 V (Note 13)	10^{11}	–	–	Ω

13. Device is considered a two – terminal device: pins 1 to 8 are shorted together and pins 9 to 16 are shorted together for input to output isolation test, and pins 9 to 11 are shorted together and pins 14 to 16 are shorted together for between channel isolation test.
14. 5,000 V_{RMS} for 1 – minute duration is equivalent to 6,000 V_{RMS} for 1 – second duration for input to output isolation test, and Impulse Test > 10 ms; sample tested for between channel isolation test.
15. The input – output isolation voltage is a dielectric voltage rating per UL1577. It should not be regarded as an input – output continuous voltage rating. For the continuous working voltage rating, refer to equipment – level safety specification or DIN VDE V 0884 – 11 Safety and Insulation Ratings Table

ELECTRICAL CHARACTERISTICS (V_{DD} = 5 V, V_{CCA} = V_{CCB} = 12 V, or 20 V (Note 17) and VSSA = VSSB, for typical values T_J = T_A = 25°C, for min/max values T_J = −40°C to +125°C, unless otherwise specified. (Note 16)

Symbol	Parameter	Condition	Min	Typ	Max	Unit
PRIMARY POWER SUPPLY SECTION (V_{DD})						
I_{QVDD}	V_{DD} Quiescent Current	V_{INA}= V_{INB} = 0 V, V_{ENABLE} = V_{DD} or $V_{DISABLE}$ = 0 V	500	780	1000	μA
		V_{INA}= V_{INB} = 5 V, V_{ENABLE} = 0 V or $V_{DISABLE}$ = V_{DD}	500	820	1000	μA
		V_{INA} = V_{INB} = 5 V, V_{ENABLE} = V_{DD} or $V_{DISABLE}$ = 0 V	7	12	16	mA
I_{VDD}	V_{DD} Operating Current	f_{IN} = 500 kHz, 50% duty cycle, C_{OUT} = 100 pF	5.0	7.15	9.0	mA
V_{DDUV+}	V_{DD} Supply Under−Voltage Positive−Going Threshold	V_{DD} = Sweep	2.7	2.8	2.9	V
V_{DDUV-}	V_{DD} Supply Under−Voltage Negative−Going Threshold	V_{DD} = Sweep	2.6	2.7	2.8	V
V_{DDHYS}	V_{DD} Supply Under−Voltage Lockout Hysteresis	V_{DD} = Sweep	–	0.1	–	V
SECONDARY POWER SUPPLY SECTION (V_{CCA} AND V_{CCB})						
I_{QVCCA} I_{QVCCB}	V_{CCA} and V_{CCB} Quiescent Current	V_{INA} = V_{INB} = 0 V, per channel	200	280	500	μA
		V_{INA} = V_{INB} = 5 V, per channel	300	410	600	μA
I_{VCCA} I_{VCCB}	V_{CCA} and V_{CCB} Operating Current	Current per channel (f_{IN} = 500 kHz, 50% duty cycle), C_{OUT} = 100 pF	2.0	3.0	5.5	mA
VCCA and VCCB UVLO THRESHOLD (5−V UVLO VERSION)						
V_{CCAUV+} V_{CCBUV+}	V_{CCA} and V_{CCB} Supply Under−Voltage Positive−Going Threshold		5.7	6.0	6.3	V
V_{CCAUV-} V_{CCBUV-}	V_{CCA} and V_{CCB} Supply Under−Voltage Negative−Going Threshold		5.4	5.7	6.0	V
V_{CCHYS}	Under−Voltage Lockout Hysteresis		–	0.3	–	V
t_{UVFLT}	Under−Voltage Debounce Time (Note 18)		–	–	10	μs
VCCA and VCCB UVLO THRESHOLD (8−V UVLO VERSION)						
V_{CCAUV+} V_{CCBUV+}	V_{CCA} and V_{CCB} Supply Under−Voltage Positive−Going Threshold		8.3	8.7	9.2	V
V_{CCAUV-} V_{CCBUV-}	V_{CCA} and V_{CCB} Supply Under−Voltage Negative−Going Threshold		7.8	8.2	8.7	V
V_{CCHYS}	Under−Voltage Lockout Hysteresis		–	0.5	–	V
t_{UVFLT}	Under−Voltage Debounce Time (Note 18)		–	–	10	μs
VCCA and VCCB UVLO THRESHOLD (13−V UVLO VERSION)						
V_{CCAUV+} V_{CCBUV+}	V_{CCA} and V_{CCB} Supply Under−Voltage Positive−Going Threshold		12	13	14	V
V_{CCAUV-} V_{CCBUV-}	V_{CCA} and V_{CCB} Supply Under−Voltage Negative−Going Threshold		11	12	13	V
V_{CCHYS}	Under−Voltage Lockout Hysteresis		–	1	–	V
t_{UVFLT}	Under−Voltage Debounce Time (Note 18)		–	–	10	μs
VCCA and VCCB UVLO THRESHOLD (17−V UVLO VERSION)						
V_{CCAUV+} V_{CCBUV+}	V_{CCA} and V_{CCB} Supply Under−Voltage Positive−Going Threshold		16	17	18	V
V_{CCAUV-} V_{CCBUV-}	V_{CCA} and V_{CCB} Supply Under−Voltage Negative−Going Threshold		15	16	17	V
V_{CCHYS}	Under−Voltage Lockout Hysteresis		–	1	–	V
t_{UVFLT}	Under−Voltage Debounce Time (Note 18)		–	–	10	μs
LOGIC INPUT SECTION (INA, AND INB)						
V_{INH}	High Level Input Voltage		1.4	1.6	1.8	V
V_{INL}	Low Level Input Voltage		0.9	1.1	1.3	V

ELECTRICAL CHARACTERISTICS (V_{DD} = 5 V, V_{CCA} = V_{CCB} = 12 V, or 20 V (Note 17) and VSSA = VSSB, for typical values T_J = T_A = 25°C, for min/max values T_J = −40°C to +125°C, unless otherwise specified. (Note 16) (continued)

Symbol	Parameter	Condition	Min	Typ	Max	Unit
LOGIC INPUT SECTION (INA, AND INB)						
V_{INHYS}	Input Logic Hysteresis		–	0.5	–	V
I_{IN+}	High Level Logic Input Bias Current	V_{IN} = 5 V	20	25	33	μA
I_{IN-}	Low Level Logic Input Bias Current	V_{IN} = 0 V	–	–	1.0	μA
R_{IN}	Logic Input Pull−Down Resistance		150	200	250	kΩ
LOGIC INPUT SECTION (for ENABLE Version only)						
V_{ENAH}	Enable High Voltage		1.4	1.6	1.8	V
V_{ENAL}	Enable Low Voltage		0.9	1.1	1.3	V
V_{ENAHYS}	Enable Logic Hysteresis		–	0.5	–	V
LOGIC INPUT SECTION (for DISABLE Version only)						
V_{DISH}	Disable High Voltage		1.4	1.6	1.8	V
V_{DISL}	Disable Low Voltage		0.9	1.1	1.3	V
V_{DISHYS}	Disable Logic Hysteresis		–	0.5	–	V
DEAD−TIME AND OVERLAP SECTION						
$t_{DT,MIN}$	Minimum Dead−Time	DT pin is left open	0	10	29	ns
t_{DT}	Dead−Time	R_{DT} = 20 kΩ	145	200	255	ns
		R_{DT} = 100 kΩ	800	1000	1200	ns
Δt_{DT}	Dead−Time Mismatch between OUTB → OUTA and OUTA → OUTB	R_{DT} = 20 kΩ	−30	–	30	ns
		R_{DT} = 100 kΩ	−150	–	150	ns
$V_{DT,SHORT}$	DT Threshold Voltage for OUTA & OUTB Overlap		0.85x V_{DD}	0.9xV_{DD}	0.95x V_{DD}	V
GATE DRIVE SECTION						
I_{OUTA+}, I_{OUTB+}	OUTA and OUTB Source Peak Current (Note 18)	V_{INA} = V_{INB} = 5 V, PW ≤ 5 μs	2.6	4.5	–	A
I_{OUTA-}, I_{OUTB-}	OUTA and OUTB Sink Peak Current (Note 18)	V_{INA} = V_{INB} = 0 V, PW ≤ 5 μs	7.0	9.0	–	A
R_{OH}	Output Resistance at High State	I_{OUTH} = 100 mA	–	1.4	2.7	Ω
R_{OL}	Output Resistance at Low State	I_{OUTL} = 100 mA	–	0.5	1.0	Ω
V_{OHA}, V_{OHB}	High Level Output Voltage (V_{CCX} − V_{OUTX})	I_{OUT} = 100 mA	–	–	270	mV
V_{OLA}, V_{OLB}	Low Level Output Voltage (V_{OUTX} − V_{SSX})	I_{OUT} = 100 mA	–	–	100	mV
DYNAMIC ELECTRICAL CHARACTERISTICS						
t_{PDON}	Turn−On Propagation Delay from INx to OUTx	V_{CCA} = V_{CCB} = 12 V, C_{LOAD} = 0 nF	24	38	57	ns
		V_{CCA} = V_{CCB} = 20 V, C_{LOAD} = 0 nF	27	41	60	ns
t_{PDOFF}	Turn−Off Propagation Delay from INx to OUTx	V_{CCA} = V_{CCB} = 12 V, C_{LOAD} = 0 nF	24	38	57	ns
		V_{CCA} = V_{CCB} = 20 V, C_{LOAD} = 0 nF	27	41	60	ns
t_{PWD}	Pulse Width Distortion (t_{PDON} − t_{PDOFF})		−5	–	5	ns
t_{DM}	Propagation Delay Mismatching between Channels	INA and INB shorted, f_{IN} = 100 kHz	−5	–	5	ns
$t_{VPOR\ to\ OUT}$	Power−up Delay from the V_{POR} to Output (Note 18)	See the Figure 52	–	18	–	μs
t_R	Turn−On Rise Time	V_{CCA} = V_{CCB} = 12 V, C_{LOAD} = 1.8 nF	–	9	16	ns
		V_{CCA} = V_{CCB} = 20 V, C_{LOAD} = 1.8 nF	–	11	19	ns
t_F	Turn−Off Fall Time	V_{CCA} = V_{CCB} = 12 V, C_{LOAD} = 1.8 nF	–	8	16	ns
		V_{CCA} = V_{CCB} = 20 V, C_{LOAD} = 1.8 nF	–	10	19	ns

ELECTRICAL CHARACTERISTICS (V_{DD} = 5 V, V_{CCA} = V_{CCB} = 12 V, or 20 V (Note 17) and VSSA = VSSB, for typical values T_J = T_A = 25°C, for min/max values T_J = −40°C to +125°C, unless otherwise specified. (Note 16) (continued)

Symbol	Parameter	Condition	Min	Typ	Max	Unit
DYNAMIC ELECTRICAL CHARACTERISTICS						
$T_{ENABLE,OUT}$, $T_{DISABLE,OUT}$	ENABLE or DISABLE to OUTx Turn−On/Off Propagation Delay	V_{CCA} = V_{CCB} = 12 V	24	38	57	ns
		V_{CCA} = V_{CCB} = 20 V	27	41	60	ns
t_{PW}	Minimum Input Pulse Width that Change Output State	C_{LOAD} = 0 nF	–	15	30	ns
CMTI	Common Mode Transient Immunity (Note 18)	Slew rate of GND versus VSSA and VSSB. INA and INB both are tied to V_{DD} or GND. V_{CM} = 1500 V	200	–	–	V/ns

Product parametric performance is indicated in the Electrical Characteristics for the listed test conditions, unless otherwise noted. Product performance may not be indicated by the Electrical Characteristics if operated under different conditions.

16. Performance guaranteed over the indicated operating temperature range by design and/or characterization tested at T_J = T_A = 25°C.
17. V_{CCA} = V_{CCB} = 12 V is used for the test condition of 8−V UVLO, V_{CCA} = V_{CCB} = 20 V is used for 17−V UVLO.
18. These parameters are verified by bench test only and not tested in production.

INSULATION CHARACTERISTICS CURVES

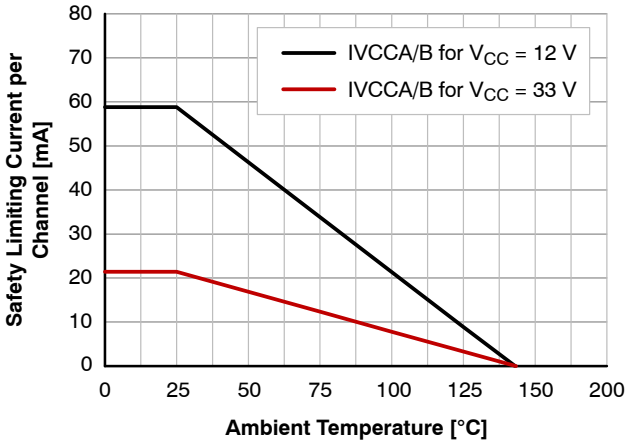

Figure 4. Thermal Derating Curve for Safety−related Limiting Current (Current in Each Channel with Both Channels Running Simultaneously)

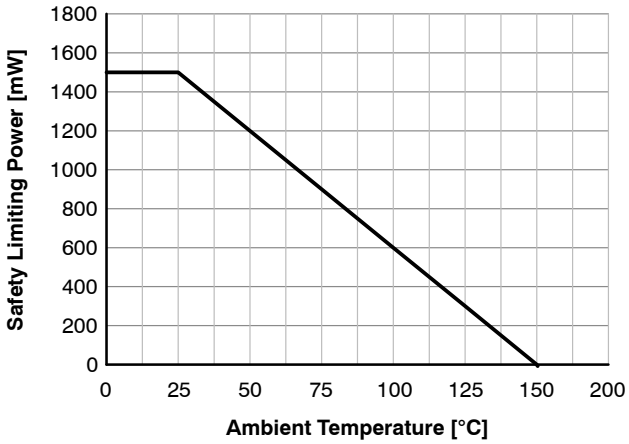

Figure 5. Thermal Derating Curve for Safety−related Limiting Power

TYPICAL CHARACTERISTIC

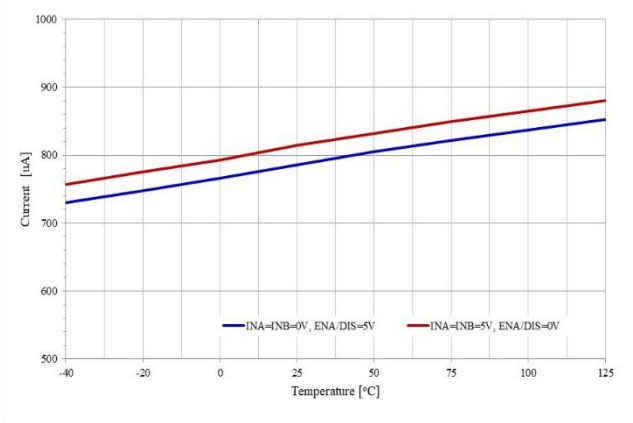

Figure 6. Quiescent V_{DD} Supply Current vs. Temperature (V_{DD} = 5 V, INA = INB = 0 V, ENA/DIS = 5 V or, INA = INB = 5 V, ENA/DIS = 0 V and No Load)

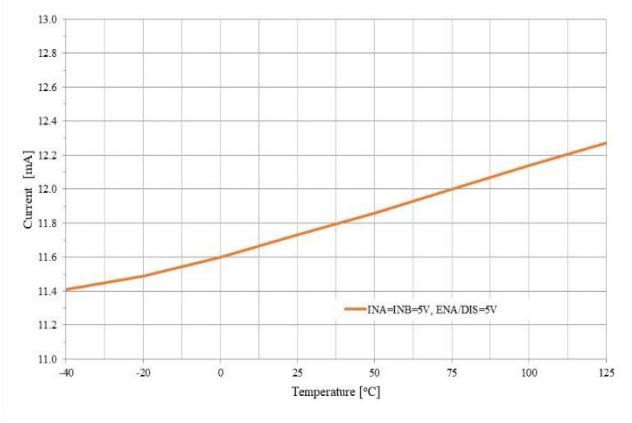

Figure 7. Quiescent V_{DD} Supply Current vs. Temperature (V_{DD} = 5 V, INA = INB = ENA/DIS = 5 V and No Load)

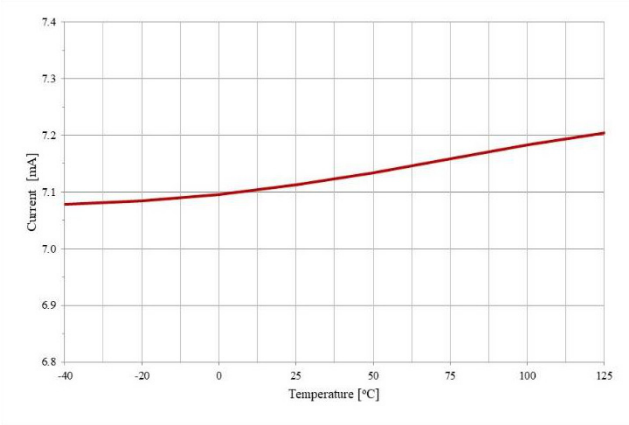

Figure 8. V_{DD} Operating Current vs. Temperature (V_{DD} = 5 V, No Load, and Switching Frequency = 500 kHz)

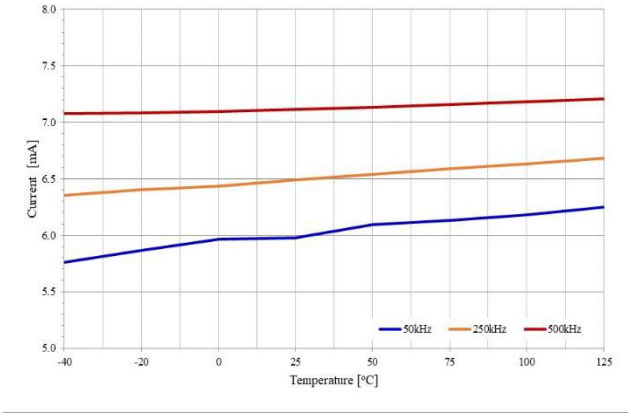

Figure 9. V_{DD} Operating Current vs. Temperature (V_{DD} = 5 V, No Load, and Different Switching Frequency)

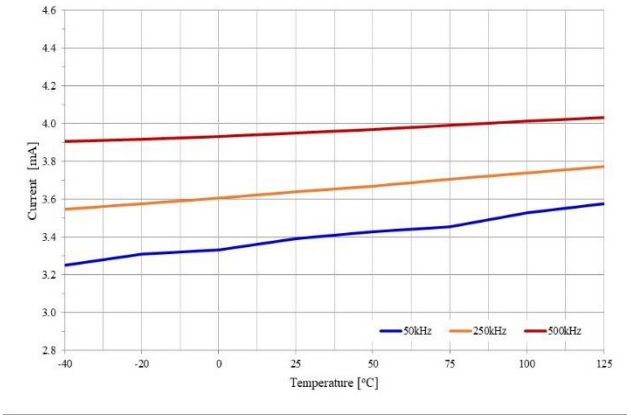

Figure 10. Per Channel V_{DD} Operating Current vs. Temperature (V_{DD} = 5 V, No Load, and Different Switching Frequency

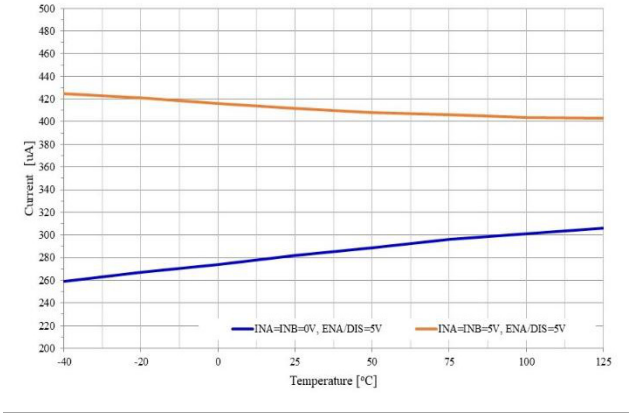

Figure 11. Per Channel Quiescent V_{CC} Supply Current vs. Temperature (INA = INB = 0 V or 5 V, ENA/DIS = 5 V and No Load

TYPICAL CHARACTERISTIC (CONTINUED)

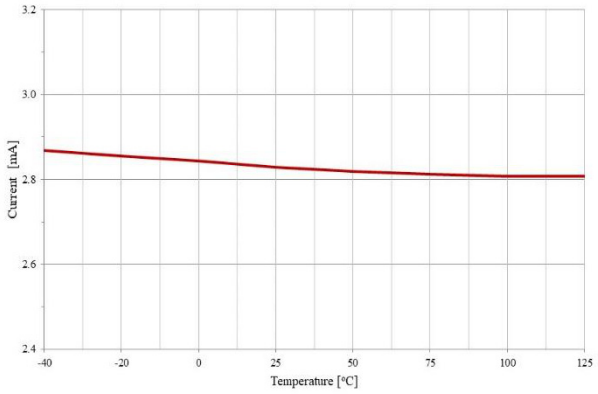

Figure 12. Per Channel V_{CC} Operating Current vs. Temperature (No Load and Switching Frequency = 500 kHz

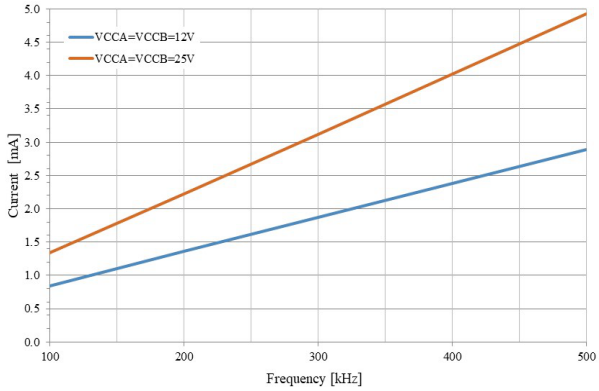

Figure 13. Per Channel Operating Current vs. Frequency (No Load, V_{CCA} = V_{CCB} = 12 V, or 25 V)

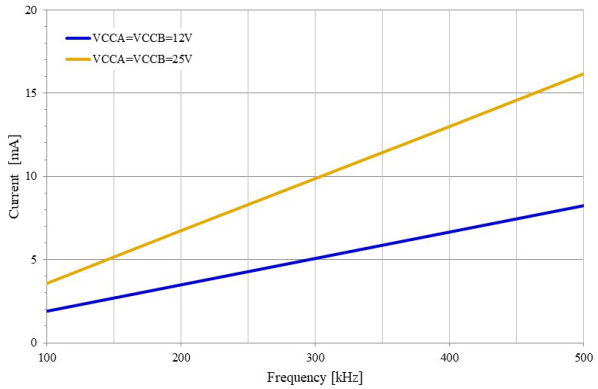

Figure 14. Per Channel Operating Current vs. Frequency (C_{LOAD} = 1 nF, V_{CCA} = V_{CCB} = 12 V, or 25 V)

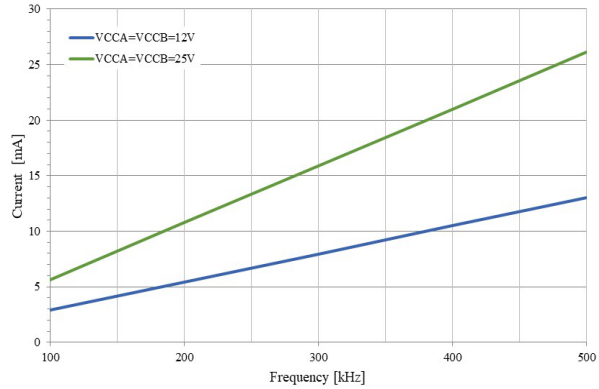

Figure 15. Per Channel Operating Current vs. Frequency (C_{LOAD} = 1.8 nF, V_{CCA} = V_{CCB} = 12 V, or 25 V)

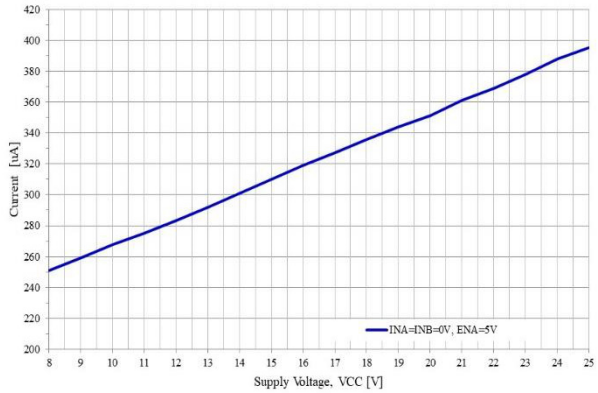

Figure 16. Per Channel V_{CC} Quiescent Current vs. V_{CC} Supply Voltage (INA = INB = 0 V, ENA = 5 V)

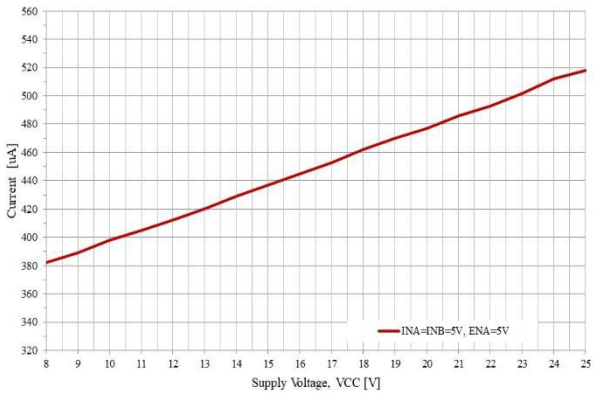

Figure 17. Per Channel V_{CC} Quiescent Current vs. V_{CC} Supply Voltage (INA = INB = 5 V, ENA = 5 V)

TYPICAL CHARACTERISTIC (CONTINUED)

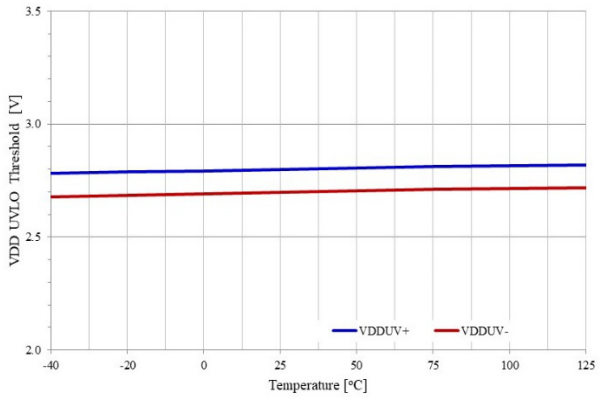

Figure 18. V_{DD} UVLO Threshold vs. Temperature

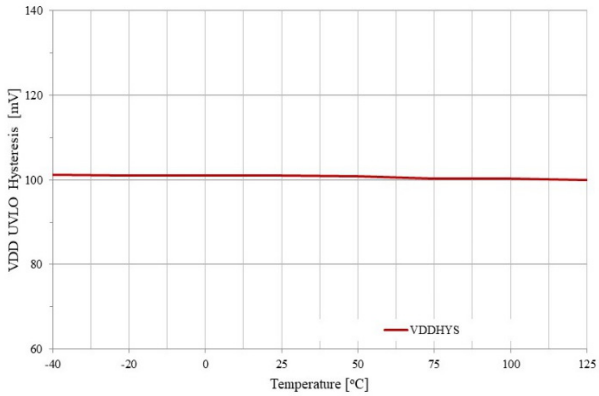

Figure 19. V_{DD} UVLO Hysteresis vs. Temperature

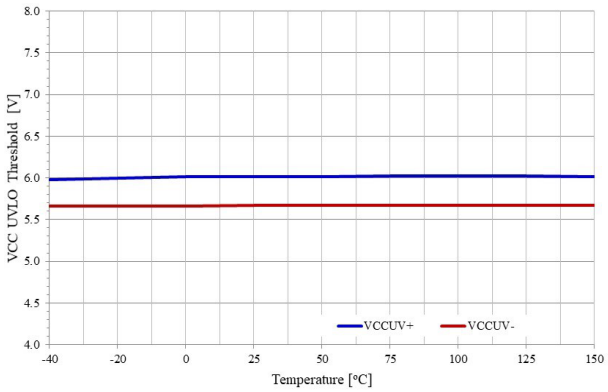

Figure 20. V_{CC} 5−V UVLO Threshold vs. Temperature

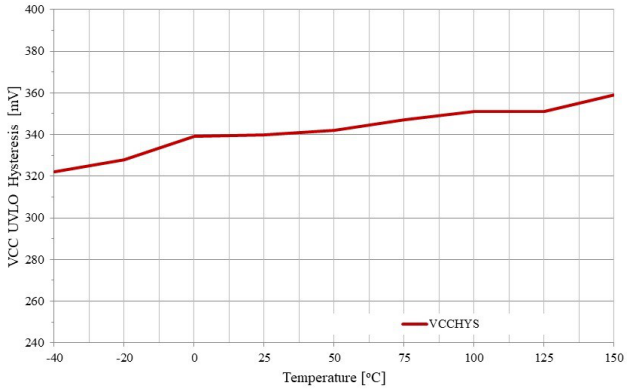

Figure 21. V_{CC} 5−V UVLO Hysteresis vs. Temperature

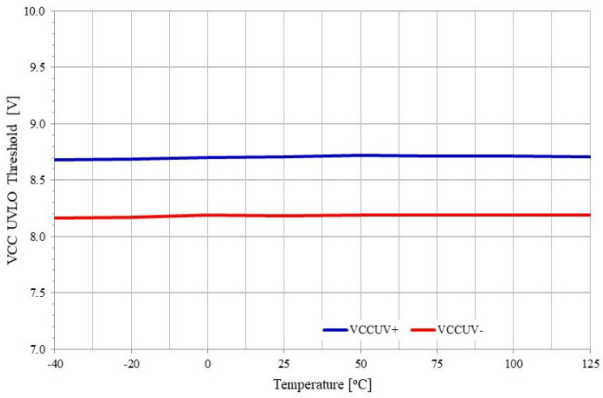

Figure 22. V_{CC} 8−V UVLO Threshold vs. Temperature

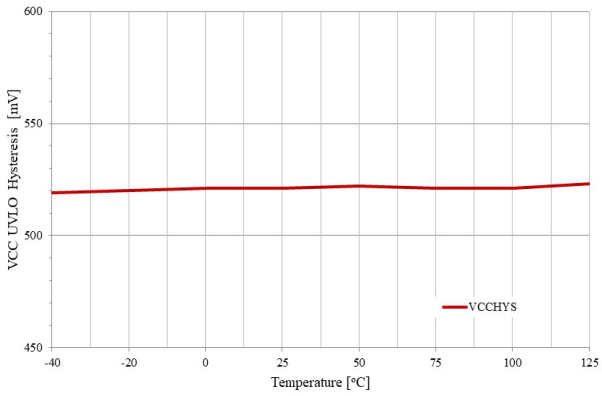

Figure 23. V_{CC} 8−V UVLO Hysteresis vs. Temperature

TYPICAL CHARACTERISTIC (CONTINUED)

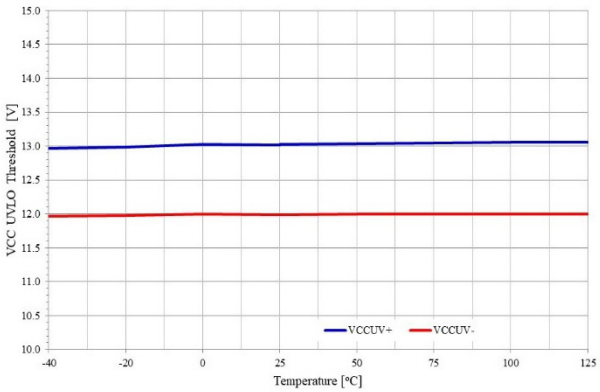

Figure 24. V_{CC} 13−V UVLO Threshold vs. Temperature

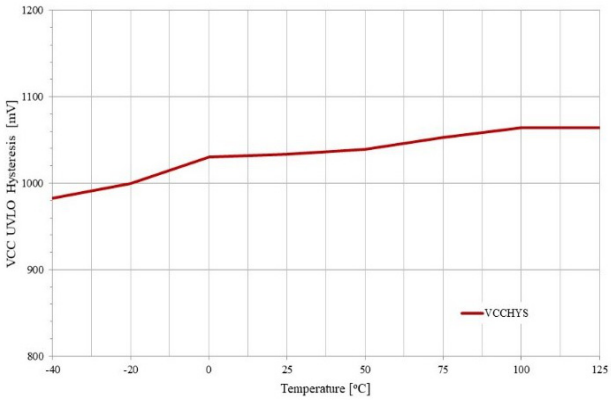

Figure 25. V_{CC} 13−V UVLO Hysteresis vs. Temperature

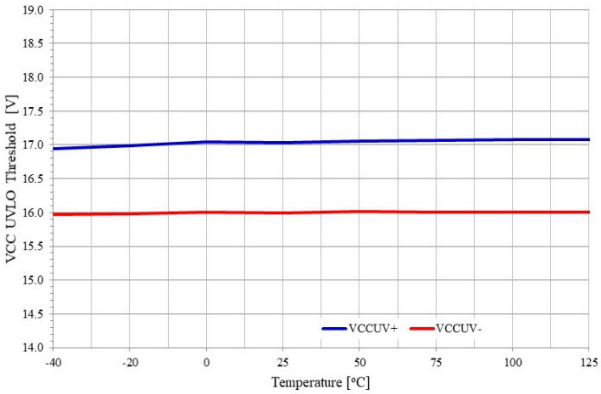

Figure 26. V_{CC} 17−V UVLO Threshold vs. Temperature

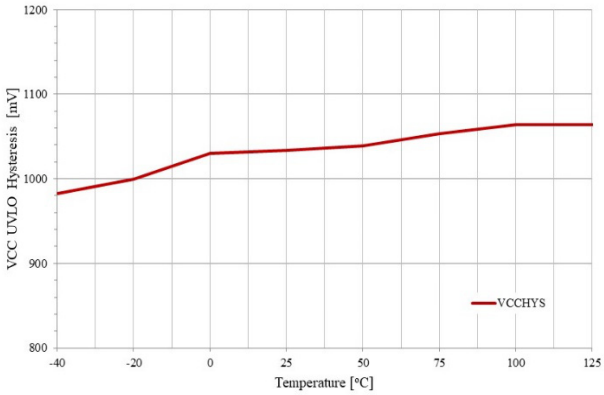

Figure 27. V_{CC} 17−V UVLO Hysteresis vs. Temperature

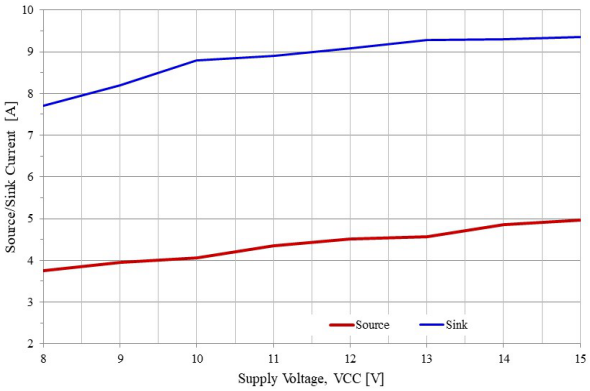

Figure 28. Output Current vs. V_{CC} Supply Voltage

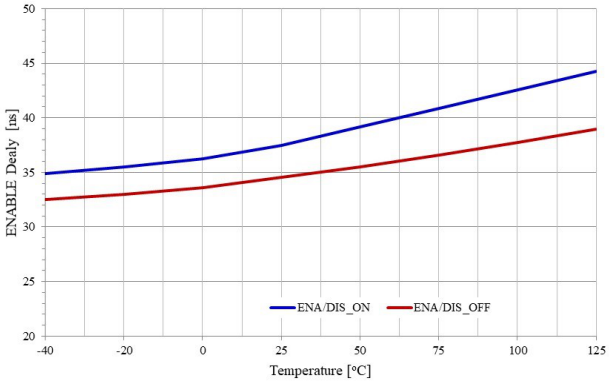

Figure 29. ENA/DIS Delay Time vs. Temperature

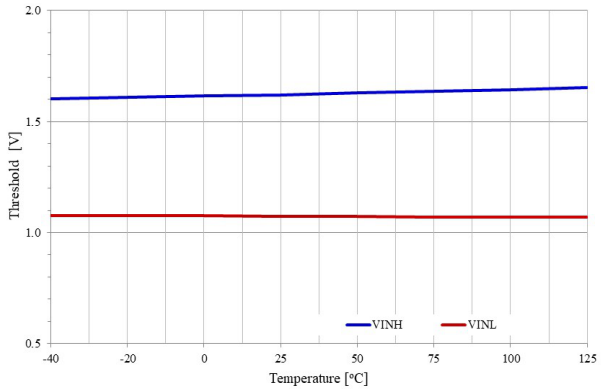

Figure 30. Input Logic Threshold vs. Temperature (INA, and INB)

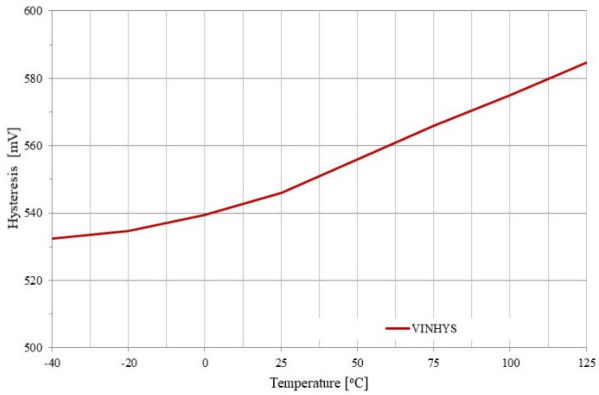

Figure 31. Input Logic Hysteresis vs. Temperature (INA, and INB)

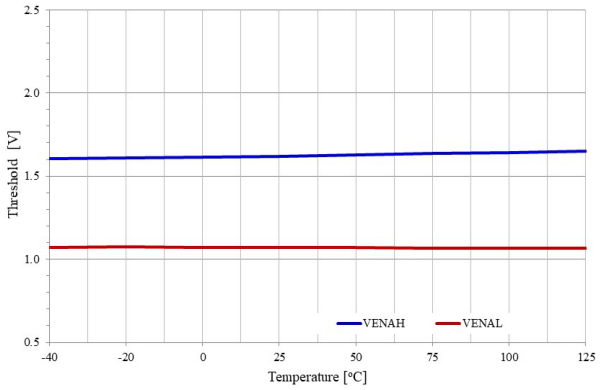

Figure 32. ENA/DIS Threshold vs. Temperature (ENABLE, and DISABLE)

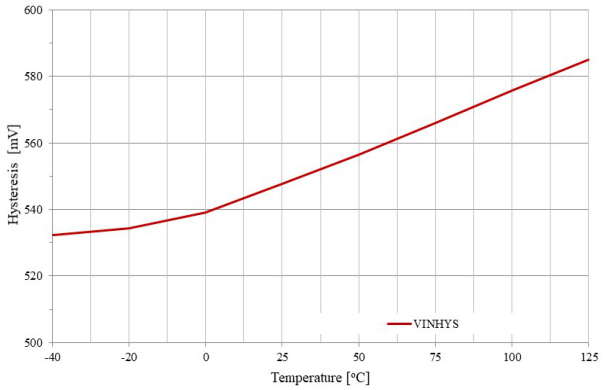

Figure 33. ENA/DIS Hysteresis vs. Temperature (ENABLE, and DISABLE)

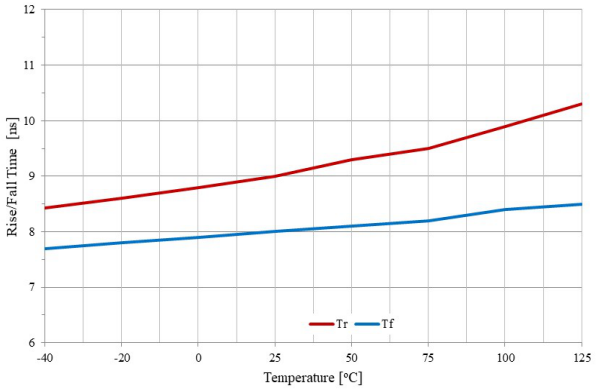

Figure 34. Rise/Fall Time vs. Temperature (C_{LOAD} = 1.8 nF)

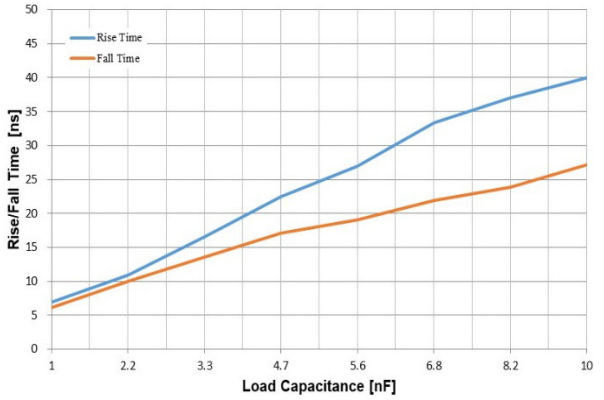

Figure 35. Rise/Fall Time vs. Temperature (V_{CC} = V_{CCB} = 12 V, and Different Load)

TYPICAL CHARACTERISTIC (CONTINUED)

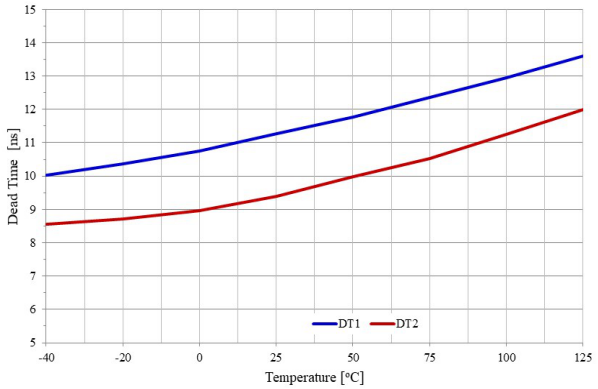

Figure 36. Dead Time vs. Temperature (R_{DT} = Open)

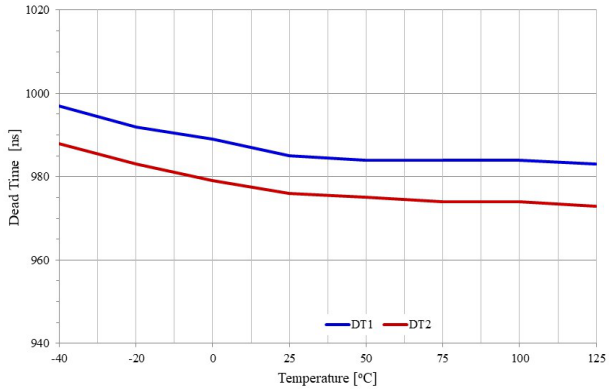

Figure 37. Dead Time vs. Temperature (R_{DT} = 100kΩ)

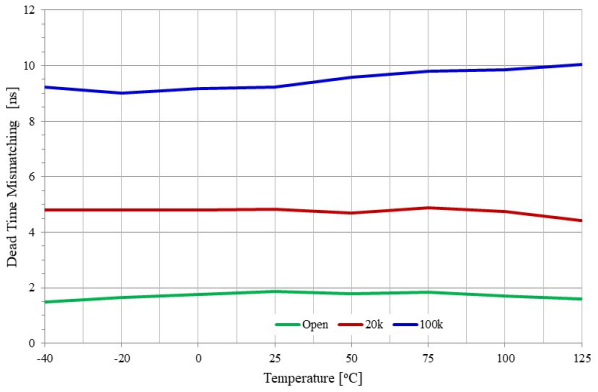

Figure 38. Dead Time Mismatching vs. Temperature

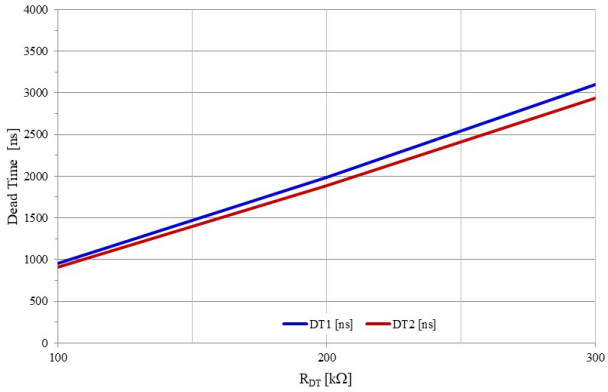

Figure 39. Dead Time vs. R_{DT}

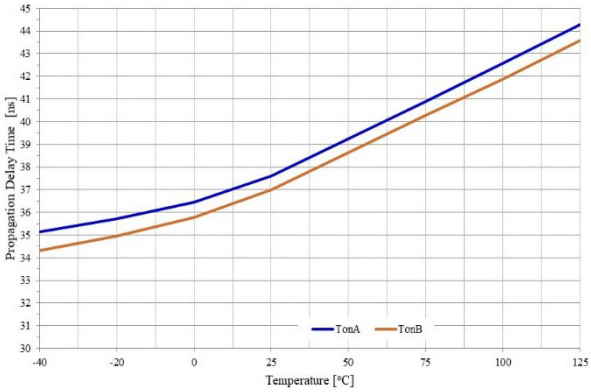

Figure 40. Turn−on Propagation Delay vs. Temperature

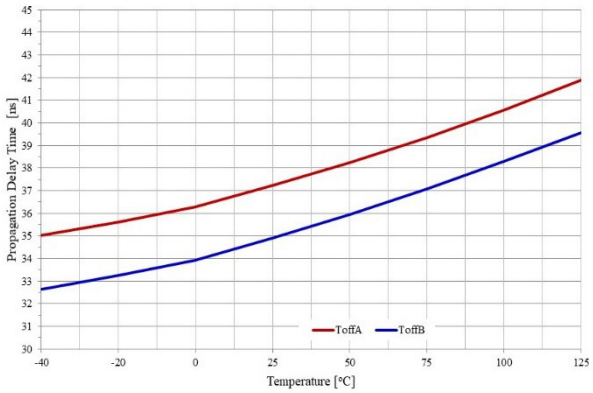

Figure 41. Turn−off Propagation Delay vs. Temperature

TYPICAL CHARACTERISTIC (CONTINUED)

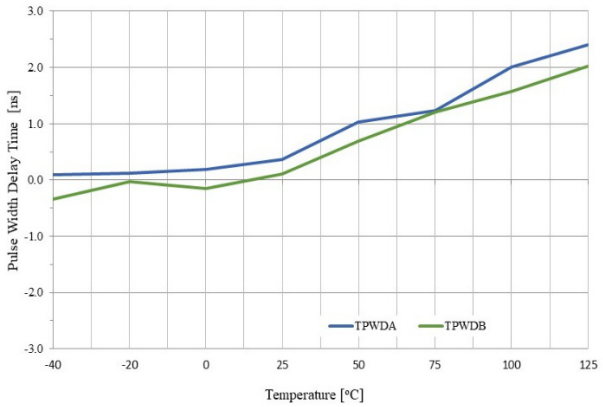

Figure 42. Pulse Width Distortion vs. Temperature

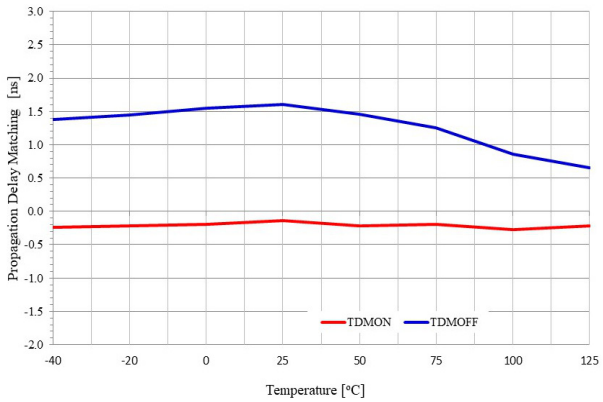

Figure 43. Propagation Delay Matching vs. Temperature

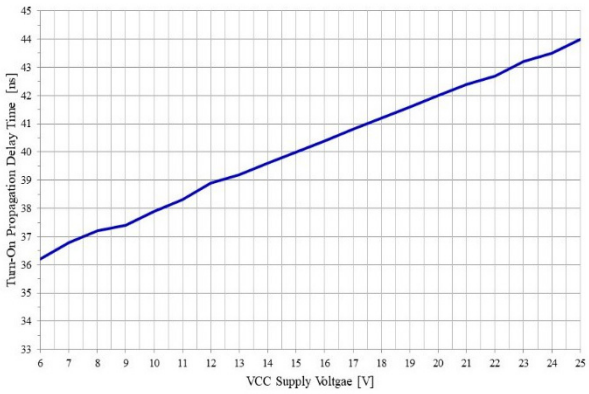

Figure 44. Turn−on Propagation Delay vs. V_{CC} Supply Voltage

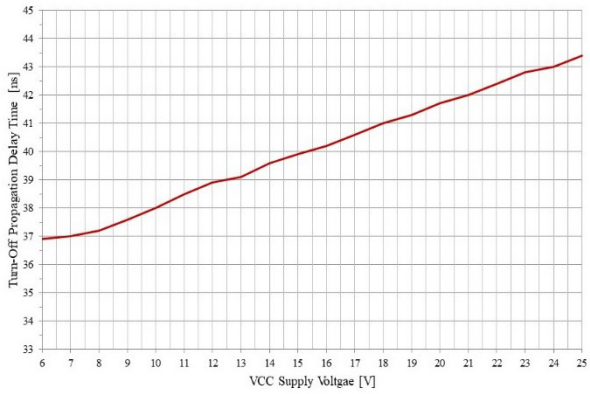

Figure 45. Turn−off Propagation Delay vs. V_{CC} Supply Voltage

PARAMETER MEASUREMENT DEFINITION

Switching Time Definitions

Figure 46 shows the switching time definitions of the turn−on (t_{PDON}) and turn−off (t_{PDOFF}) propagation delay time among the driver's two input signals INA, INB and two output signals OUTA, OUTB. The typical values of the propagation delay (t_{PDON}, T_{PDOFF}), pulse width distortion (t_{PWD}) and delay matching between channels times are specified in the electrical characteristics table.

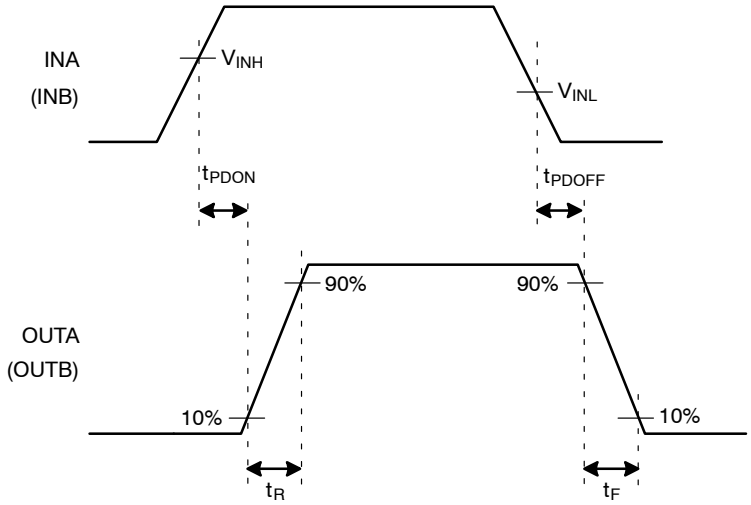

Figure 46. Switching Time Definitions

Enable and Disable Function

Figure 47 shows the response time according to an ENABLE or the DISABLE operating modes. If the ENA/DIS pin voltage goes to LOW state, i.e. $V_{ENA} \leq 1.1$ V shuts down both outputs simultaneously and Pull the ENA/DIS pin HIGH (or left open), i.e. $V_{ENA} \geq 1.6$ V to operate normally in an ENABLE mode as shown in Figure 47 (a). Conversely, if the ENA/DIS pin voltage goes to HIGH state, i.e. $V_{DIS} \geq 1.6$ V shuts down both outputs simultaneously and Pull the ENA/DIS pin LOW (or left open), i.e. $V_{DIS} \leq 1.1$ V operate normally in the DISABLE mode as shown in Figure 47 (b).

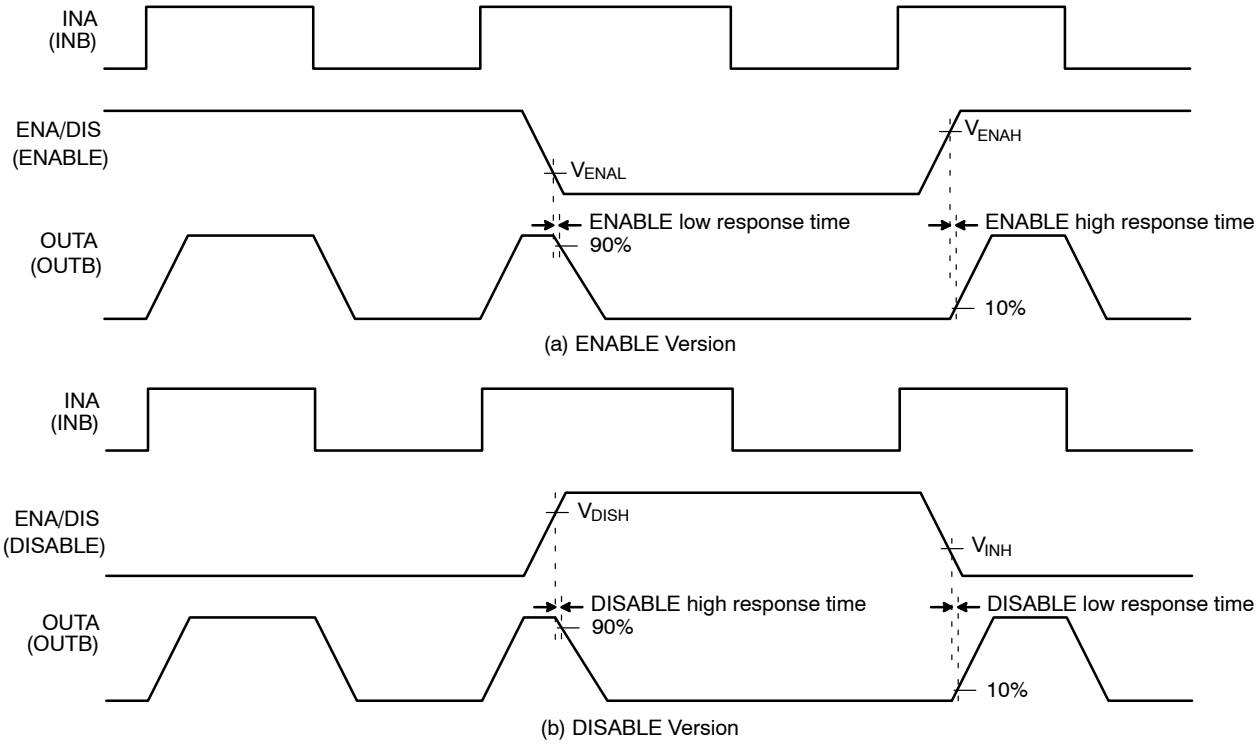

Figure 47. Timing Chart of Enable and Disable Function

Programmable Dead−Time

Dead time is automatically inserted whenever the dead time of the external two input signals (between INA and INB signals) is shorter than internal setting dead times (DT1 and DT2). Otherwise, if the external input signal dead times are larger than internal dead− time, the dead time is not modified by the gate driver and internal dead−time definition as shown in Figure 48.

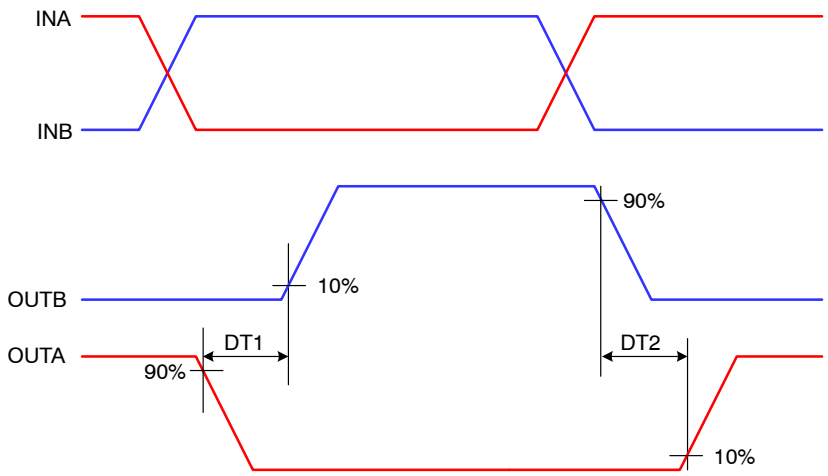

Figure 48. Internal Dead−Time Definitions

Figure 49 shows the definition of internal dead time and shoot−through prevention when input signals applied at same time.

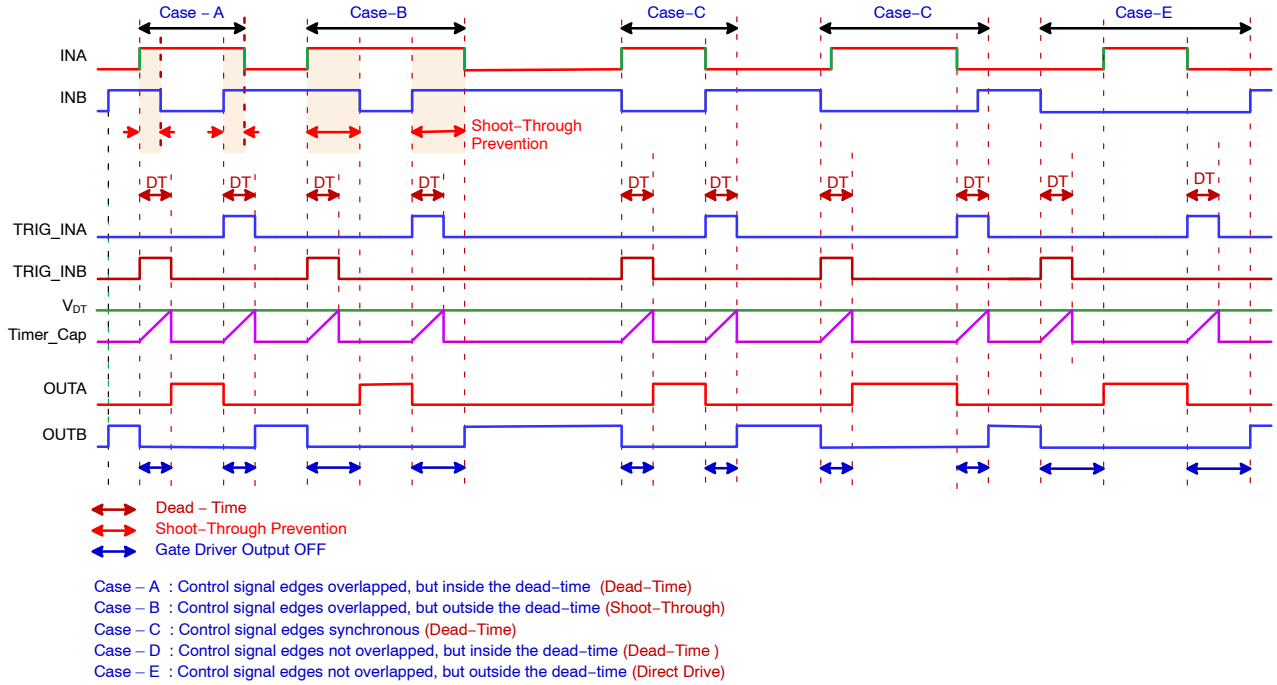

Figure 49. Internal Dead−Time Definitions

DEVICE INFORMATION

Input to Output Operation Definitions

The NCP51560 provides important protection functions such as independent under−voltage lockout for both gate driver; enable or disable function and dead−time control function. Figure 50 shows an overall input to output timing diagram when shutdown mode via ENA/DIS pin in the *CASE−A*, and Under−Voltage Lockout protection on the primary− and secondary−sides power supplies events in the *CASE−B*. The gate driver output (OUTA and OUTB) were turn−off when cross−conduction event at the dead time control mode in the *CASE−C*.

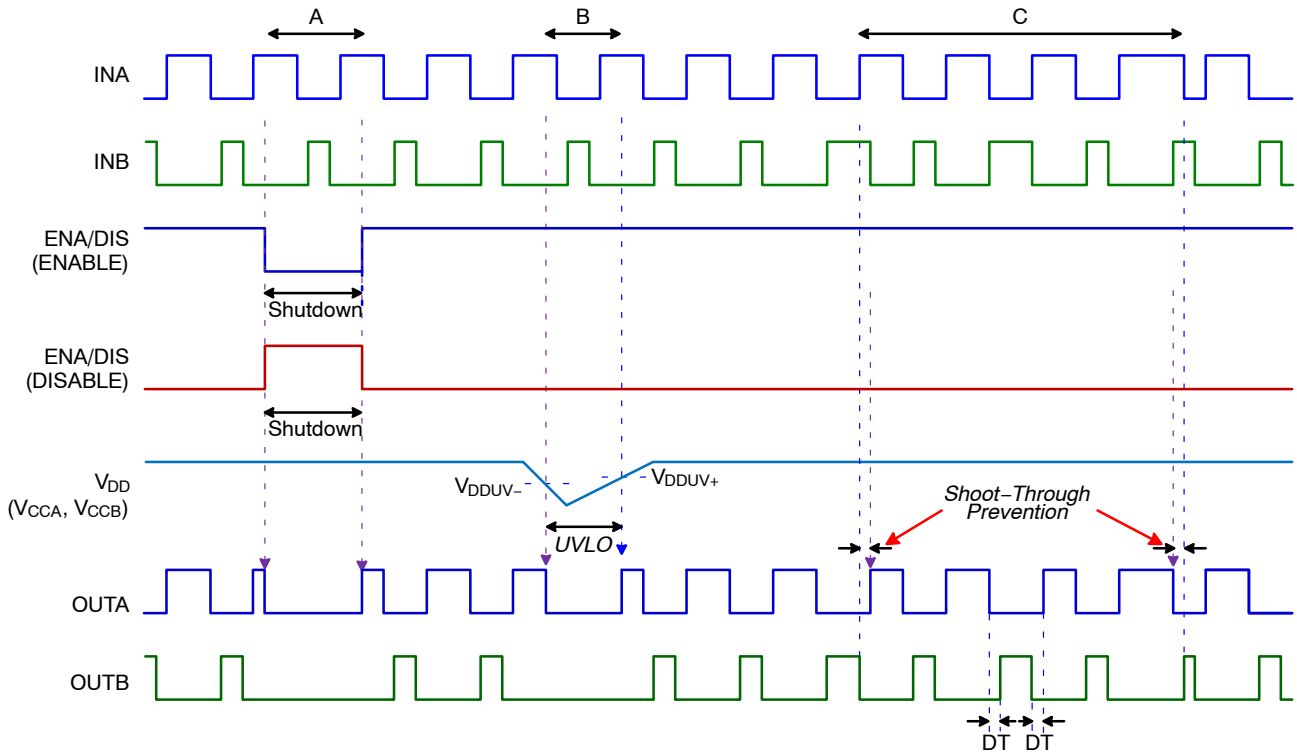

Figure 50. Overall Operating Waveforms Definitions at the Dead−Time Control Mode

Input and Output Logic Table

Table 1 shows an input to output logic table according to the dead time control modes and an enable or the disable operation mode.

Table 1. INPUT AND OUTPUT LOGIC TABLE

INPUT				OUTPUT		
		ENA/DIS				
INA	INB	ENABLE	DISABLE	OUTA	OUTB	NOTE
L	L	H or Left open	L or Left open	L	L	Programmable dead time control with R_{DT}.
L	H	H or Left open	L or Left open	L	H	
H	L	H or Left open	L or Left open	H	L	
H	H	H or Left open	L or Left open	L	L	DT pin is left open Or programmed with R_{DT}.
H	H	H or Left open	L or Left open	H	H	DT pin pulled to V_{DD}.
Left open	Left open	H or Left open	L or Left open	L	L	
X	X	L	H	L	L	

19. “X” means L, H or left open.

PROTECTION FUNCTION

The NCP51560 provides the protection features include enable or disable function, Cross Conduction Protection, and Under−Voltage Lockout (UVLO) of power supplies on primary−side (V_{DD}), and secondary−side both channels (V_{CCA}, and V_{CCB}).

Under−Voltage Lockout Protection V_{DD} and V_{CCx}

The NCP51560 provides the Under−Voltage Lockout (UVLO) protection function for V_{DD} in primary−side and both gate drive output for V_{CCA} and V_{CCB} in secondary−side as shown in Figure 51.

The gate driver is running when the V_{DD} supply voltage is greater than the specified under−voltage lockout threshold voltage (e.g. typically 2.8 V) and ENA/DIS pin is HIGH or LOW states for an ENABLE (e.g. NCP51560xA) or the DISABLE (e.g. NCP51560xB) mode respectively.

In addition, both gate output drivers have independent under voltage lockout protection (UVLO) function and each channel supply voltages in secondary−side (e.g. V_{CCA}, and V_{CCB}) need to be greater than specified UVLO threshold level in secondary−side to let the output operate per input signal. The typical V_{CCx} UVLO threshold voltage levels for each option are per below Table 2.

Table 2. V_{CCx} UVLO OPTION TABLE

Option	V_{CC} UVLO Level	Unit
5−V	6.0	V
8−V	8.7	V
13−V	13	V
17−V	17	V

UVLO protection has an hysteresis to provide immunity to short V_{CC} drops that can occur.

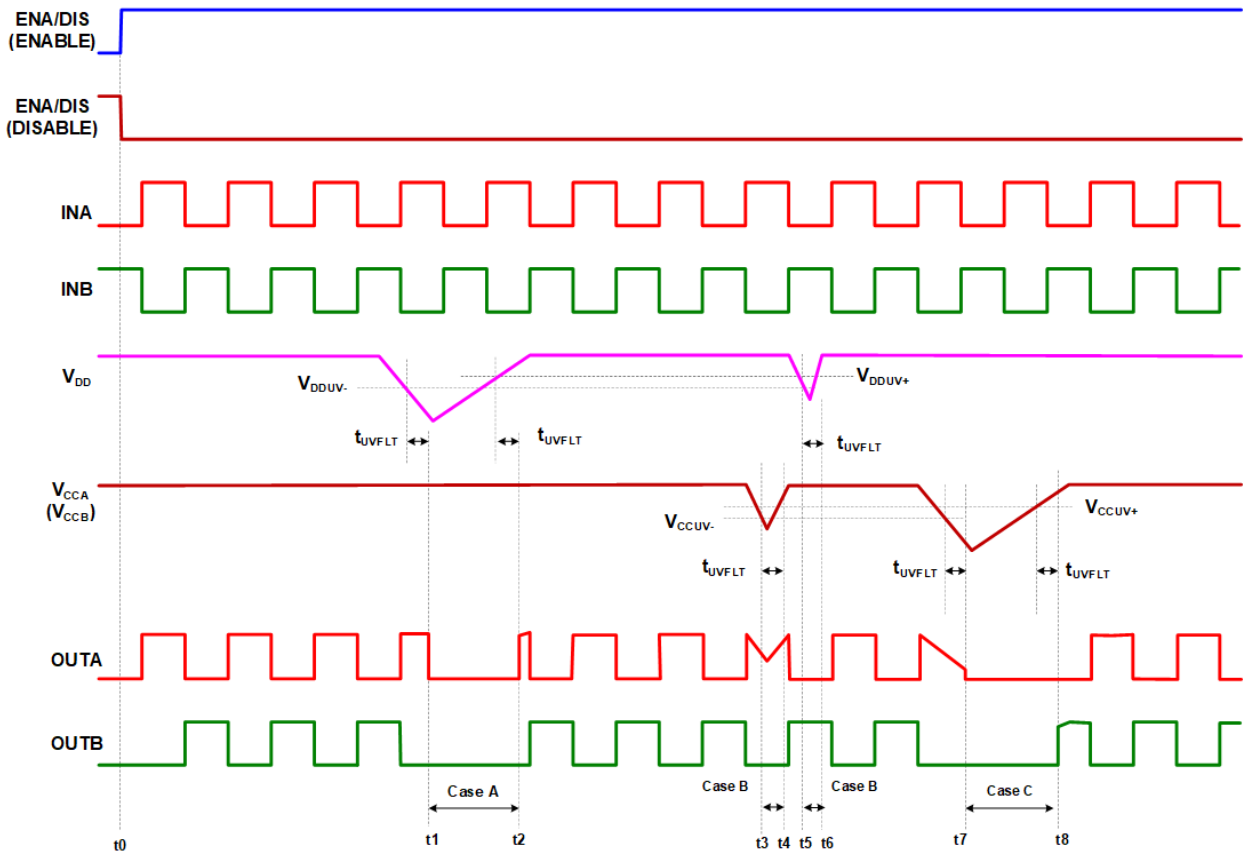

Figure 51. Timing Chart Under−Voltage Lockout Protection

Power−Up VCC UVLO Delay to OUTPUT

To provide a variety of Under−Voltage Lockout (UVLO) thresholds NCP51560 has a power−up delay time during initial V_{CCX} start−up or after POR event.

Before the gate driver is ready to deliver a proper output state, there is a power−up delay time from the V_{CC} power−on reset (POR) threshold to output and it is defined as $t_{VPOR\ to\ OUT}$. (e.g. typically 18 μs). Figure 52 shows the power−up UVLO delay time diagram for V_{CC}.

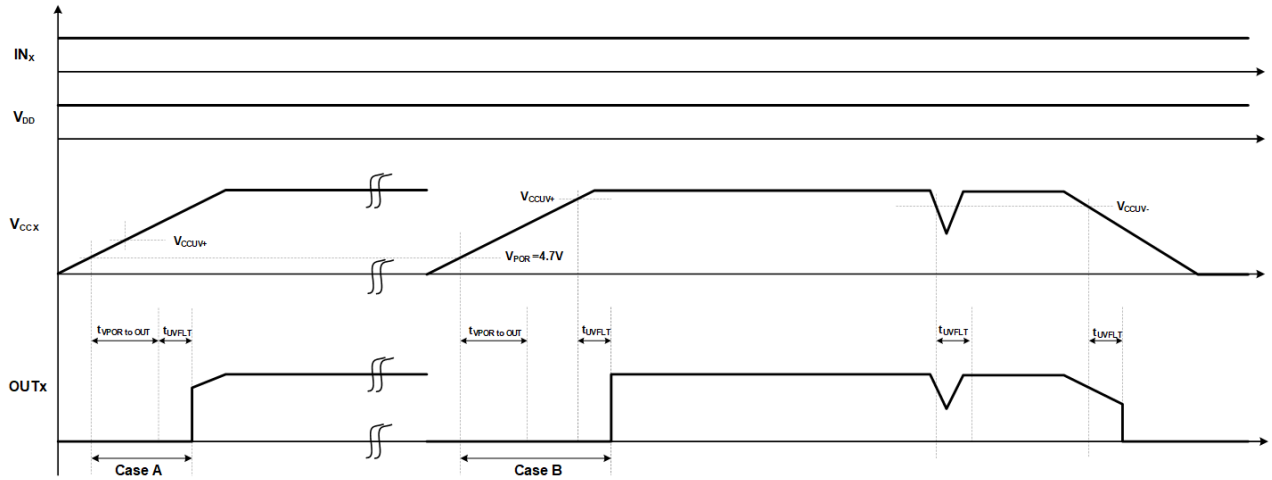

Figure 52. Timing VCC Power−Up UVLO Delay Time

Cross−Conduction Prevention and Allowed Overlapped Operation

The cross conduction prevents both high− and low−side switches from conducting at the same time when the dead time (DT) control mode is in half−bridge type, as shown in Figure 53.

For full topologies flexibility, cross conduction can be allowed both high− and low−side switches conduct at the same time when the DT pin is pulled to V_{DD} for example, as shown in Figure 54.

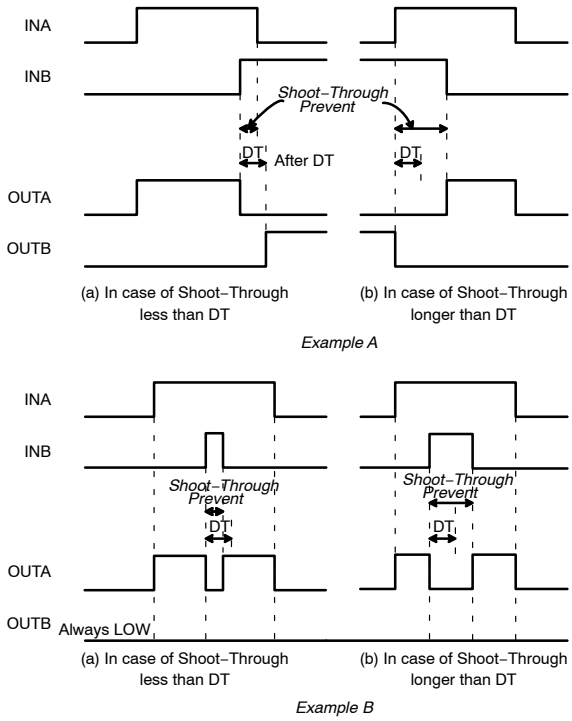

Figure 53. Concept of Shoot−Through Prevention

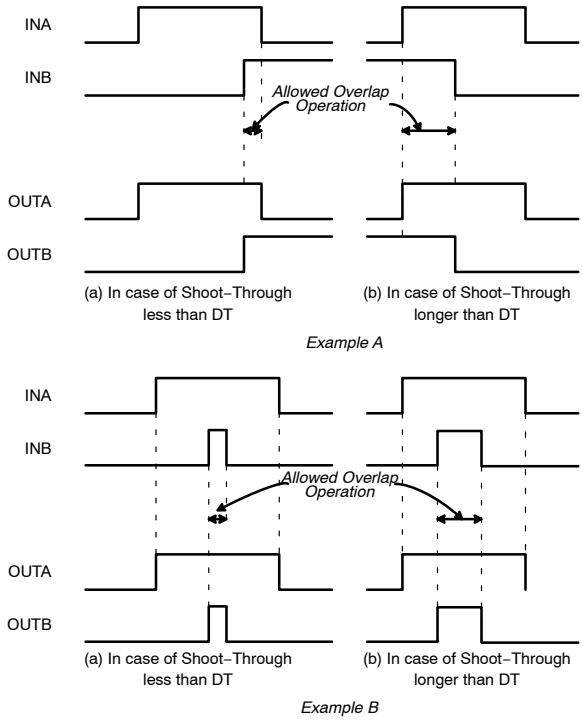

Figure 54. Concept of Allowed the Shoot−Through

Programmable Dead Time Control

Cross−conduction between both driver outputs (OUTA, and OUTB) is not allowed with minimum dead time (t_{DTMIN}) typically 10 ns when the DT pin is open in the **MODE−A.** External resistance (R_{DT}) controls dead time when the DT pin resistor between 1 kΩ and 300 kΩ in the **MODE−B**. Overlap is not allowed when the dead time (DT) control mode is activated.

The dead time (DT) between both outputs is set according to: DT (in ns) = 10 x R_{DT} (in kΩ).

Overlap is allowed for both outputs when the DT pin is pulled to V_{DD} in the **MODE−C**, as shown in Figure 55.

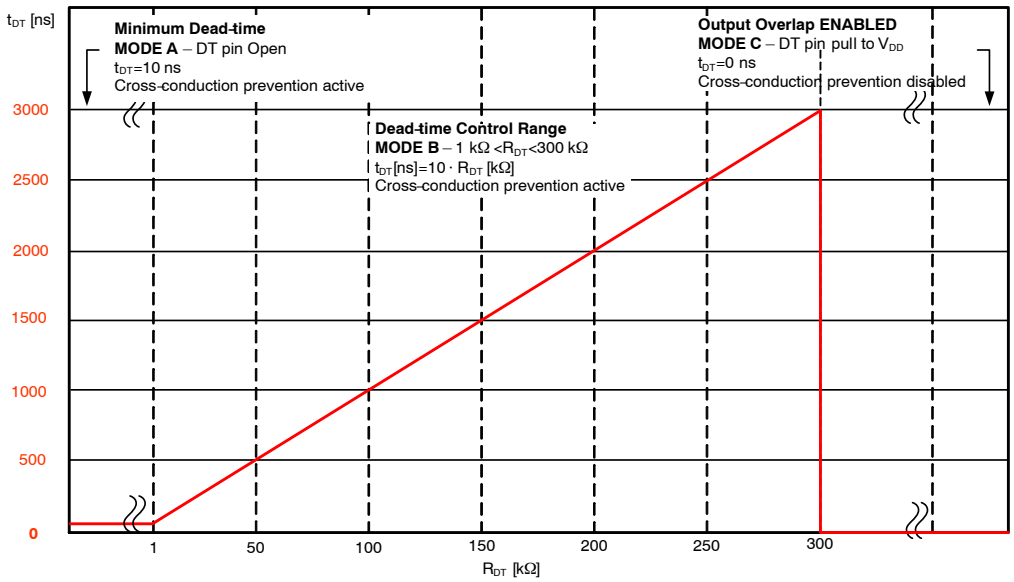

Figure 55. Timing Chart of Dead−Time Mode Control

Common Mode Transient Immunity Testing

Figure 56 is a simplified diagram of the Common Mode Transient Immunity (CMTI) testing configuration.

CMTI is the maximum sustainable common−mode voltage slew rate while maintaining the correct output.

CMTI applies to both rising and falling common−mode voltage edges. CMTI is tested with the transient generator connected between GND and VSSA and VSSB. (V_{CM} = 1500 V)

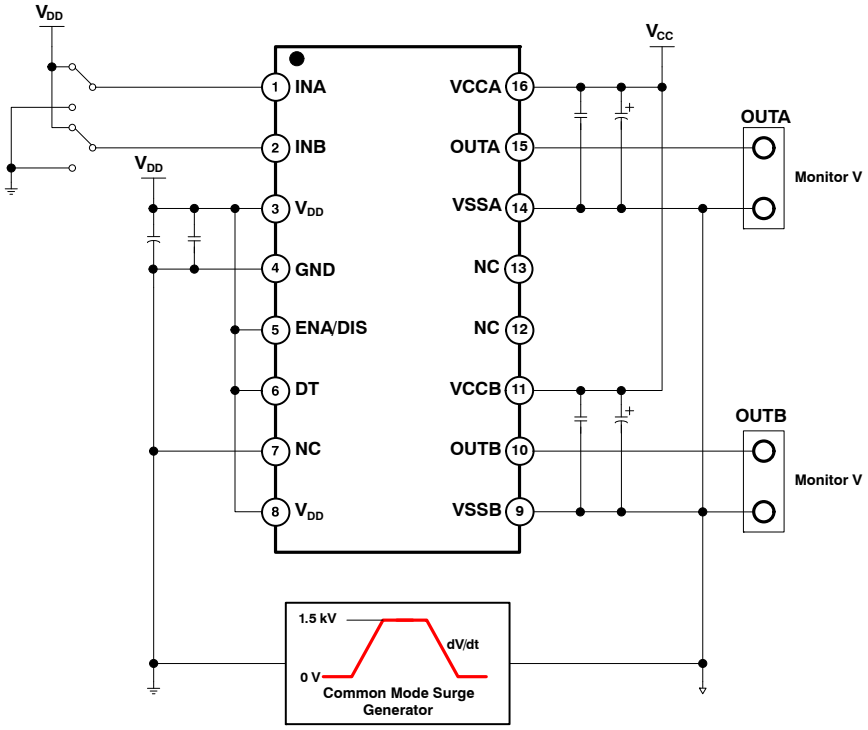

Figure 56. Common Mode Transient Immunity Test Circuit

APPLICATION INFORMATION

This section provides application guidelines when using the NCP51560.

Power Supply Recommendations

It is important to remember that during the Turn−On of switch the output current to the gate is drawn from the V_{CCA} and V_{CCB} supply pins. The V_{CCA} and V_{CCB} pins should be bypassed with a capacitor with a value of at least ten times the gate capacitance, and no less than 100 nF and located as close to the device as possible for the purpose of decoupling. A low ESR, ceramic surface mount capacitor is necessary. We recommend using 2 capacitors; a 100 nF ceramic surface−mount capacitor which can be very close to the pins of the device, and another surface−mount capacitor of few microfarads added in parallel.

Input Stage

The input signal pins (INA, INB, and ENA/DIS) of the NCP51560 are based on the TTL compatible input−threshold logic that is independent of the V_{DD} supply voltage. The logic level compatible input provides a typically high and low threshold of 1.6 V and 1.1 V respectively. The input signal pins impedance of the NCP51560 is 200 kΩ typically and the INA, and INB, pins are pulled to GND pin and ENA/DIS pin is pulled to V_{DD} pin for an ENABLE version as shown in Figure 57. Conversely, ENA/DIS pin pulled to GND pin for the DISABLE version. It is recommended that ENA/DIS pin should be tie to V_{DD} or GND pins for ENABLE and DISABLE versions respectively if the ENA/DIS pin is not used to achieve better noise immunity because the ENA/DIS pin is quite responsive, as far as propagation delay and other switching parameters are concerned.

An RC filter is recommended to be added on the input signal pins to reduce the impact of system noise and ground bounce, the time constant of the RC filter. Such a filter should use an R_{IN} in the range of 0 Ω to 100 Ω and a C_{IN} between 10 pF and 100 pF. In the example, an R_{IN} = 51 Ω and a C_{IN} = 33 pF are selected, with a corner frequency of approximately 100 MHz. When selecting these components, it is important to pay attention to the trade−off between good noise immunity and propagation delay.

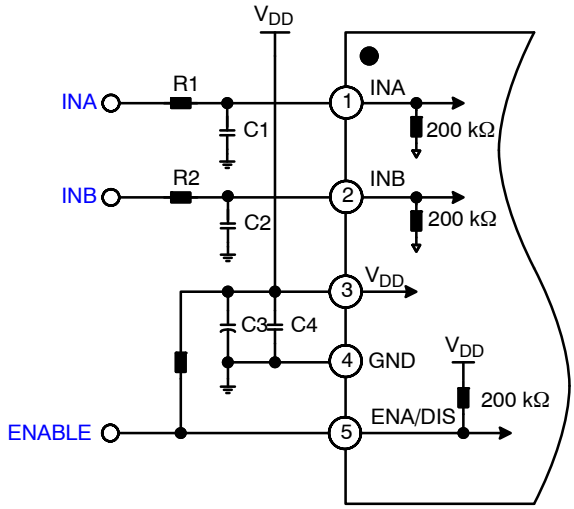

Figure 57. Schematic of Input Stage

Output Stage

The output driver stage of the NCP51560 features a pull up structure and a pull down structure.

The pull up structure of the NCP51560 consists of a PMOS stage ensuring to pull all the way to the V_{CC} rail. The pull down structure of the NCP51560 consists of a NMOS device as shown in Figure 58.

The output impedance of the pull up and pull down switches shall be able to provide about +4.5 A and −9 A peak currents typical at 25°C and the minimum sink and source peak currents at 125°C are −7 A sink and +2.6 A source.

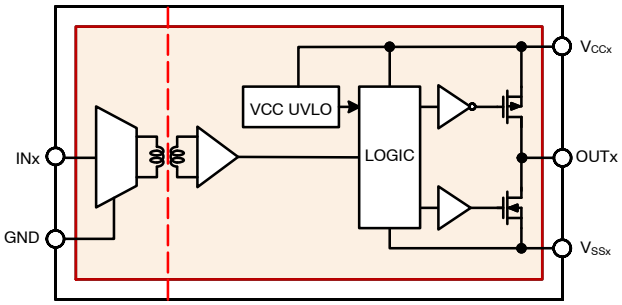

Figure 58. Schematic of Output Stage

Consideration of Driving Current Capability

Peak source and sink currents (I_{SOURCE}, and I_{SINK}) capability should be larger than average current ($I_{G,AV}$) as shown in Figure 59.

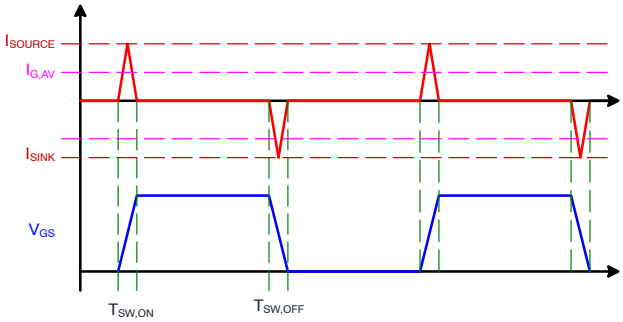

Figure 59. Definition of Current Driving Capability

The approximate maximum gate charge Q_G that can be switched in the indicated time for each driver current rating may be calculate: Needed driver current ratings depend on what gate charge Q_G must be moved in what switching time $t_{SW-ON/OFF}$ because average gate current during switching is I_G.

$$I_{G.AV} = \frac{Q_G}{t_{SW,ON/OFF}} \quad \text{(eq. 1)}$$

The approximate gate driver source and sink peak currents can be calculated as below equations

At turn−on (Sourcing current)

$$I_{SOURCE} \geq 1.5 \times \frac{Q_G}{t_{SW,ON}} \quad \text{(eq. 2)}$$

At turn−off (Sinking current)

$$I_{SINK} \geq 1.5 \times \frac{Q_G}{t_{SWOFF}} \quad \text{(eq. 3)}$$

where,

Q_G = Gate charge at $V_{GS} = V_{CC}$
$t_{SW,\ ON/OFF}$ = Switch On / Off time
1.5 = empirically determined factor
(Influenced by $I_{G,AV}$ vs. I_{DRV}, and circuit parasitic)

Consideration of Gate Resistor

The gate resistor is also sized to reduce ringing voltage by parasitic inductances and capacitances. However, it limits the current capability of the gate driver output. The limited current capability value induced by turn−on and off gate resistors can be obtained with below equation.

$$I_{SOURCE} = \frac{V_{CC} - V_{OH}}{R_{G,ON}}$$
$$I_{SINK} = \frac{V_{CC} - V_{OL}}{R_{G,OFF}} \quad \text{(eq. 4)}$$

where:

I_{SOURCE}: Source peak current
I_{SINK}: Sink peak current.
V_{OH}: High level output voltage drop
V_{OL}: Low level output voltage drop

Application Circuits with Output Stage Negative Bias

SiC MOSFET unique operating characteristics need to be carefully considered to fully benefits from SiC characteristics. The gate driver needs to be capable of providing +20 V and −2 V to −5 V negative bias with minimum output impedance and high current capability.

When parasitic inductances are introduced by non−ideal PCB layout and long package leads (e.g. TO−220 and TO−247 type packages), there could be ringing in the gate−source drive voltage of the power transistor during high di/dt and dv/dt switching. If the ringing is over the threshold voltage, there is the risk of unintended turn−on and even shoot−through. Applying a negative bias on the gate drive is a popular way to keep such ringing below the threshold. Negative voltage can improve the noise tolerance of SiC MOSFET to suppress turning it unintentionally. The negative gate−source voltage makes the capacitance of Cgd becoming lower, which can reduce the ringing voltage.

Below are a few examples of implementing negative gate drive bias. The first example with negative bias with two isolated−bias power supplies as shown in Figure 60.

Power supply VHx determines the positive drive output voltage and VLx determines the negative turn−off voltage for each channels. This solution requires more power supplies than the conventional bootstrapped power supply example; however, it provides more flexibility when setting the positive, VHx, and negative, VLx, rail voltages.

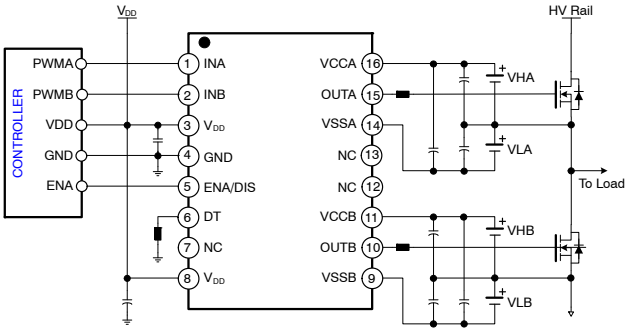

Figure 60. Negative Bias with Two Isolated−Bias Power Supplies

Figure 61 shows another example with negative bias turn−off on the gate driver using a Zener diode on an isolated power supply. The negative bias set by the voltage of Zener diode. For example, if the isolated power supply, VHx for

each channels, the turn−off voltage will be –5.1 V and turn−on voltage will be 20 V – 5.1 V ≈ 15 V.

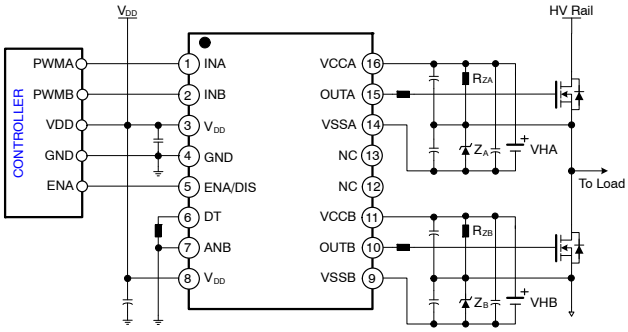

Figure 61. Negative Bias with Zener Diode on Single Isolated−Bias Power Supply

Moreover, this configuration could easily be changed negative bias by a using different Zener diode with the same 20 V isolated power supply. This configuration needs two isolated power supplies for a half−bridge configuration, but this scheme is very simple.

However, it has the disadvantage of having a steady state power consumption from R_{Zx}. Therefore, one should be careful in selecting the R_{Zx} values. It is recommended that R_{Zx} allow the minimal current flow to stabilize the Zener clamping voltage (e.g. I_Z: 5 mA~10 mA).

Typical recommended values are in the few kohm range (e.g. 1 kΩ~4.7 kΩ) of SiC MOSFETs application.

Experimental Results

Figure 62 show the experimental results of the negative bias with Zener diode on single isolated power supply of the NCP51560 for SiC MOSFET gate drive application. The examples were design to have a +15 V and −5.1 V drive power supply referenced to the device source by using the 20 V isolated power supply.

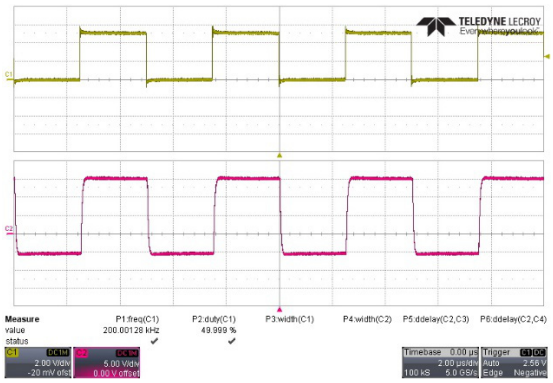

CH1: INPUT [2V/div], and CH2: OUTPUT [5 V/div]

Figure 62. Experimental Waveforms of Negative Bias with Zener Diode on Single Isolated Power Supply

PCB Layout Guideline

To improve the switching characteristics and efficiency of design, the following should be considered before beginning a PCB layout.

Component Placement

- Keep the input/output traces as short as possible. Minimize influence of the parasitic inductance and capacitance on the layout. (To maintain low signal−path inductance, avoid using via.)
- Placement and routing for supply bypass capacitors for V_{DD} and V_{CC}, and gate resistors need to be located as close as possible to the gate driver.
- The gate driver should be located switching device as close as possible to decrease the trace inductance and avoid output ringing.

Grounding Consideration

- Have a solid ground plane underneath the high−speed signal layer.
- Have a solid ground plane next to V_{SSA} and V_{SSB} pins with multiple V_{SSA} and V_{SSB} vias to reduce the parasitic inductance and minimize the ringing on the output signals.

High−Voltage (V_{ISO}) Consideration

- To ensure isolation performance between the primary and secondary side, any PCB traces or copper should be not placed under the driver device as shown in Figure 63. A PCB cutout is recommended to avoid contamination that may impair the isolation performance of NCP51560.

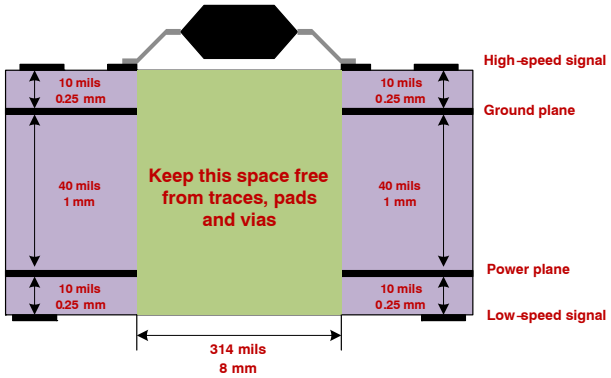

Figure 63. Recommended Layer Stack

Figure 64 shows the printed circuit board layout of NCP51560 evaluation board.

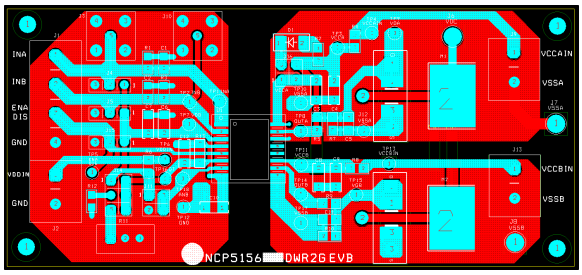

(a) Top & Bottom View

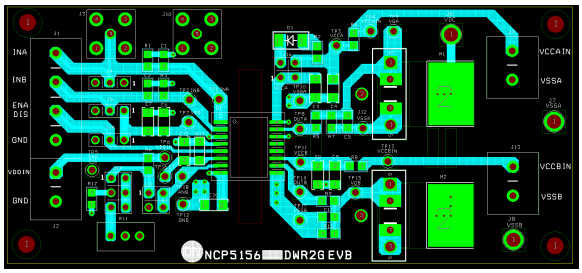

(b) Top View

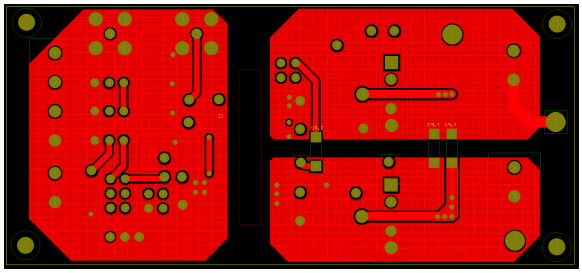

(c) Bottom View

Figure 64. Printed Circuit Board

ORDERING INFORMATION

Device	Description	Package	UVLO	ENA/DIS	Shipping†
NCP51560ABDWR2G	High current dual isolated MOS driver	SOIC−16 WB (Pb−Free)	5 V	DISABLE	1000 / Tape & Reel
NCP51560BBDWR2G		SOIC−16 WB (Pb−Free)	8 V	DISABLE	1000 / Tape & Reel
NCP51560CBDWR2G*		SOIC−16 WB (Pb−Free)	13 V	DISABLE	1000 / Tape & Reel
NCP51560DBDWR2G*		SOIC−16 WB (Pb−Free)	17 V	DISABLE	1000 / Tape & Reel

†For information on tape and reel specifications, including part orientation and tape sizes, please refer to our Tape and Reel Packaging Specifications Brochure, BRD8011/D.
*Option on demand.

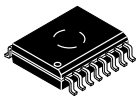

1
SCALE 1:1

SOIC−16 WB
CASE 751G
ISSUE E

DATE 08 OCT 2021

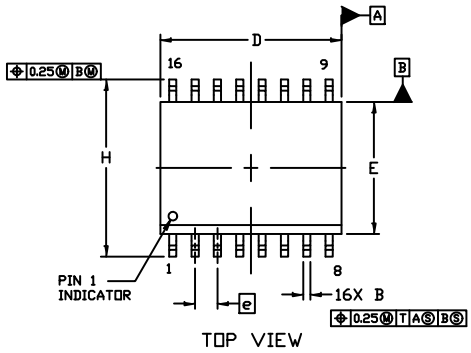

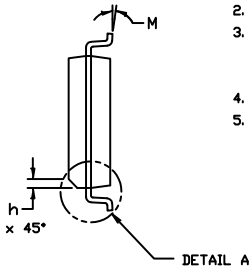

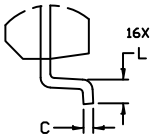

DETAIL A
2X SCALE

NOTES:
1. DIMENSIONING AND TOLERANCING PER ASME Y14.5M, 1994.
2. CONTROLLING DIMENSION: MILLIMETERS
3. DIMENSION b DOES NOT INCLUDE DAMBAR PROTRUSION. ALLOWABLE PROTRUSION SHALL BE 0.13 TOTAL IN EXCESS OF B DIMENSION AT MAXIMUM MATERIAL CONDITION.
4. DIMENSIONS D AND E DO NOT INCLUDE MOLD PROTRUSIONS.
5. MAXIMUM MOLD PROTRUSION OR FLASH TO BE 0.15 PER SIDE.

	MILLIMETERS	
DIM	MIN.	MAX.
A	2.35	2.65
A1	0.10	0.25
B	0.35	0.49
C	0.23	0.32
D	10.15	10.45
E	7.40	7.60
e	1.27 BSC	
H	10.05	10.55
h	0.53 REF	
L	0.50	0.90
M	0°	7°

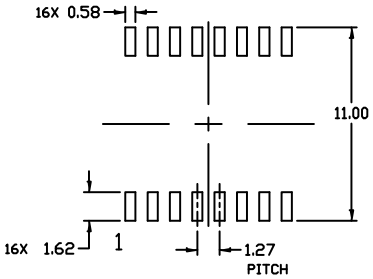

RECOMMENDED
MOUNTING FOOTPRINT

GENERIC
MARKING DIAGRAM*

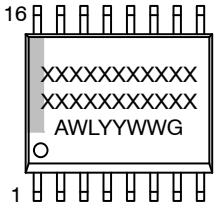

XXXXX = Specific Device Code
A = Assembly Location
WL = Wafer Lot
YY = Year
WW = Work Week
G = Pb−Free Package

*This information is generic. Please refer to device data sheet for actual part marking. Pb−Free indicator, “G” or microdot “▪”, may or may not be present. Some products may not follow the Generic Marking.

DOCUMENT NUMBER:	98ASB42567B	Electronic versions are uncontrolled except when accessed directly from the Document Repository. Printed versions are uncontrolled except when stamped “CONTROLLED COPY” in red.
DESCRIPTION:	SOIC−16 WB	PAGE 1 OF 1

onsemi and onsemi are trademarks of Semiconductor Components Industries, LLC dba **onsemi** or its subsidiaries in the United States and/or other countries. **onsemi** reserves the right to make changes without further notice to any products herein. **onsemi** makes no warranty, representation or guarantee regarding the suitability of its products for any particular purpose, nor does **onsemi** assume any liability arising out of the application or use of any product or circuit, and specifically disclaims any and all liability, including without limitation special, consequential or incidental damages. **onsemi** does not convey any license under its patent rights nor the rights of others.

onsemi, onsemi, and other names, marks, and brands are registered and/or common law trademarks of Semiconductor Components Industries, LLC dba "**onsemi**" or its affiliates and/or subsidiaries in the United States and/or other countries. **onsemi** owns the rights to a number of patents, trademarks, copyrights, trade secrets, and other intellectual property. A listing of **onsemi**'s product/patent coverage may be accessed at www.onsemi.com/site/pdf/Patent−Marking.pdf. **onsemi** reserves the right to make changes at any time to any products or information herein, without notice. The information herein is provided "as−is" and **onsemi** makes no warranty, representation or guarantee regarding the accuracy of the information, product features, availability, functionality, or suitability of its products for any particular purpose, nor does **onsemi** assume any liability arising out of the application or use of any product or circuit, and specifically disclaims any and all liability, including without limitation special, consequential or incidental damages. Buyer is responsible for its products and applications using **onsemi** products, including compliance with all laws, regulations and safety requirements or standards, regardless of any support or applications information provided by **onsemi**. "Typical" parameters which may be provided in **onsemi** data sheets and/or specifications can and do vary in different applications and actual performance may vary over time. All operating parameters, including "Typicals" must be validated for each customer application by customer's technical experts. **onsemi** does not convey any license under any of its intellectual property rights nor the rights of others. **onsemi** products are not designed, intended, or authorized for use as a critical component in life support systems or any FDA Class 3 medical devices or medical devices with a same or similar classification in a foreign jurisdiction or any devices intended for implantation in the human body. Should Buyer purchase or use **onsemi** products for any such unintended or unauthorized application, Buyer shall indemnify and hold **onsemi** and its officers, employees, subsidiaries, affiliates, and distributors harmless against all claims, costs, damages, and expenses, and reasonable attorney fees arising out of, directly or indirectly, any claim of personal injury or death associated with such unintended or unauthorized use, even if such claim alleges that **onsemi** was negligent regarding the design or manufacture of the part. **onsemi** is an Equal Opportunity/Affirmative Action Employer. This literature is subject to all applicable copyright laws and is not for resale in any manner.

ADDITIONAL INFORMATION

TECHNICAL PUBLICATIONS:
Technical Library: www.onsemi.com/design/resources/technical−documentation
onsemi Website: www.onsemi.com

ONLINE SUPPORT: www.onsemi.com/support
For additional information, please contact your local Sales Representative at
www.onsemi.com/support/sales