NCP81148

Advance Information

Synchronous Buck Controller with Auto Power Saving Mode and Built-In LDO

NCP81148 is a dual synchronous buck controller that is optimized for converting the battery voltage or adaptor voltage into multiple power rails required in desktop and notebook system. NCP81148 consists of two buck switching controllers with fixed 5.0 V output on channel 2, 3.3 V on channel 1 and two on−board LDOs with three outputs: 5 V / 60 mA and 3.3 V or 12 V / 10 mA. NCP81148 supports high efficiency, fast transient response and provides power good signals. ON Semiconductor proprietary adaptive−ripple control enables seamless transition from CCM to DCM, where converter runs at reduced switching frequency with much higher efficiency at light load. The part operates with supply voltage ranging from 5.5 V to 28 V. NCP81148 is available in a 28−pin QFN package.

Features

- Wide Input Voltage Range: from 5.5 V to 28 V
- Built−in 5 V / 60 mA LDO
- Built−in selectable 3.3 V or 12 V / 10 mA LDO
- Three Selectable Fixed Frequency 300 KHz, 400 KHz or 600 KHz
- 180 Interleaved Operation Between the Two Channels in Continue−Conduction−Mode (CCM)
- Selected Power−Saving Mode/Forced PWM Mode
- Transient−Response−Enhancement (TRE) Control
- Input Supply Voltage Feed Forward Control
- Resistive or Lossless Inductor's DCR Current Sensing
- Over−Temperature Protection
- Internal Fixed 8.5 ms Soft−Start
- Fixed Output Voltages 5 V and 3.3 V
- Power Good Outputs for Both Channels
- Built−in Adaptive Gate Drivers
- Output Discharge Operation
- Built−in Over−Voltage, Under−Voltage Protection
- Accurate Over−Current Protection
- Thermal Shutdown

Applications

- Desktop / Notebook Computers
- System Power Supplies
- I/O Power Supplies

This document contains information on a new product. Specifications and information herein are subject to change without notice.

ON Semiconductor®

http://onsemi.com

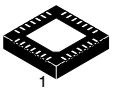

28 PIN QFN, 4x4
MN SUFFIX
CASE 485AR

MARKING DIAGRAM

81148	= Specific Device Code
A	= Assembly Location
L	= Wafer Lot
Y	= Year
W	= Work Week
▪	= Pb−Free Package

(Note: Microdot may be in either location)

PIN CONNECTIONS

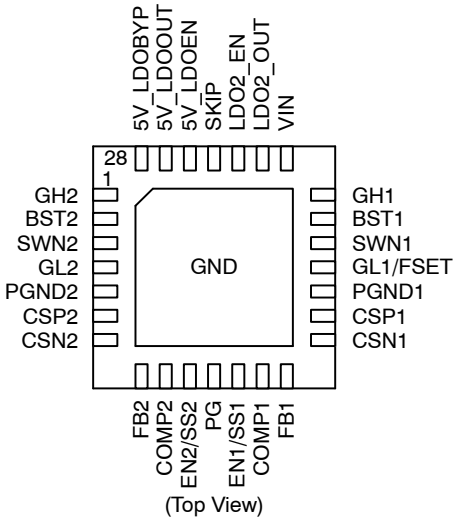

(Top View)

ORDERING INFORMATION

Device	Package	Shipping†
NCP81148MNTWG	QFN−28 (Pb−Free)	4,000 / Tape & Reel

†For information on tape and reel specifications, including part orientation and tape sizes, please refer to our Tape and Reel Packaging Specification Brochure, BRD8011/D.

© Semiconductor Components Industries, LLC, 2014

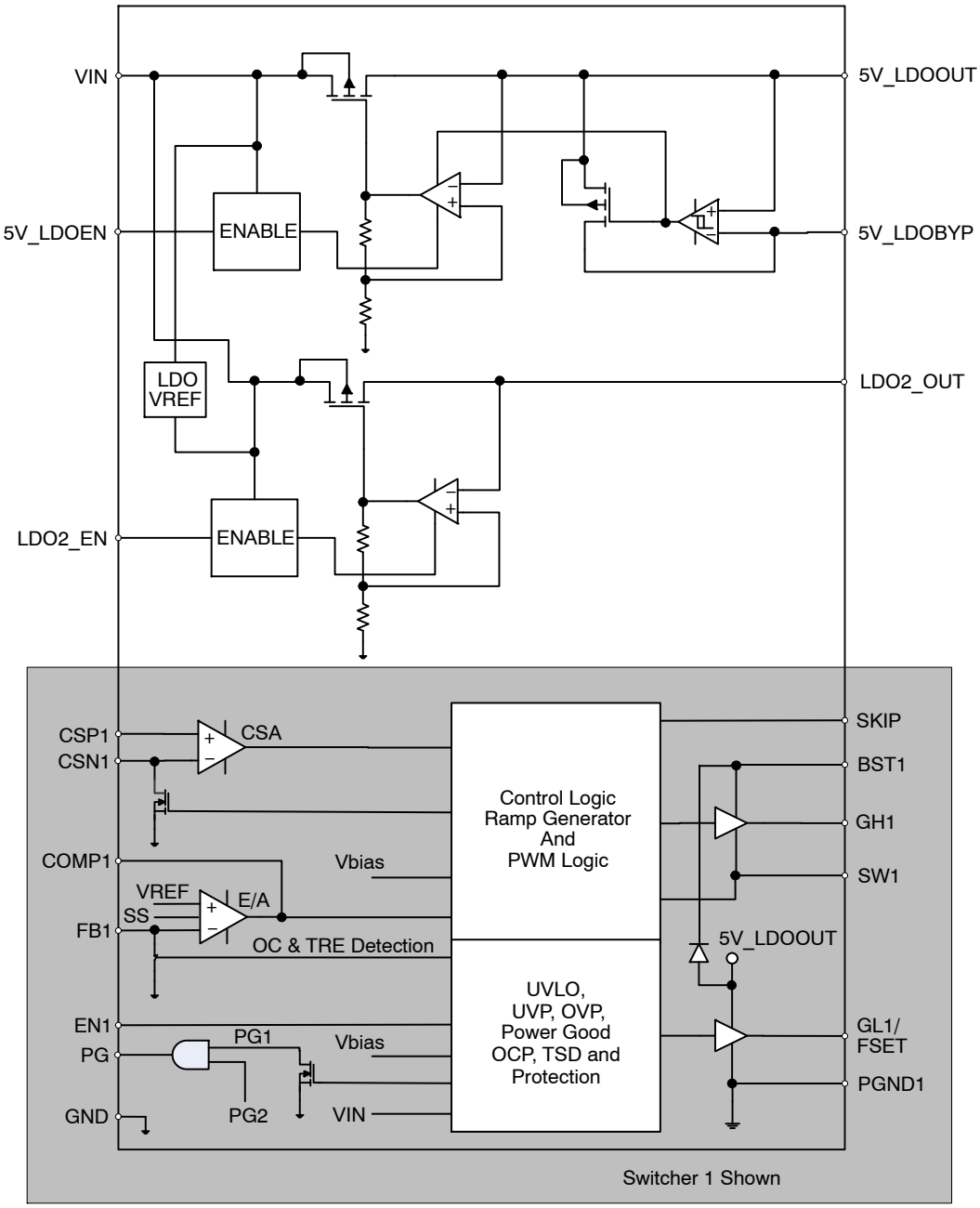

Figure 1. Block Diagram

Table 1. PIN DESCRIPTIONS

Pin No.	Symbol	Description
1, 21	GH1, GH2	Gate driver output of the top N−channel MOSFET.
2, 20	BST1, BST2	Top gate driver input supply, a bootstrap capacitor connection between SWNx and this pin.
3, 19	SWN1, SWN2	Switch node between the top MOSFET and bottom MOSFET.
4	GL2	Gate driver output of bottom N−channel MOSFET in channel2.
18	GL1/FSET	Gate driver output of bottom N−channel MOSFET in channel1. And it is also used to set up switching frequency by connecting a resistor from this pin to ground.
5, 17	PGND1, PGND2	Power ground for channel 1 & 2.
6, 16	CSP1, CSP2	Inductor current differential sense non−inverting input.
7, 15	CSN1, CSN2	Inductor current differential sense inverting input.
8, 14	FB1, FB2	Output voltage feed back.
9, 13	COMP1, COMP2	Output of the error amplifier.
10, 12	EN1, EN2	Channel 1 and channel 2 enable pin. Short this pin to ground to disable the switcher channel. Pull this pin high to enable the switcher channel.
11	PG	Power good indicator for both output voltages. Open−drain output.
22	VIN	Battery or Adaptor input voltage
23	LDO2_OUT	Second internal LDO output. A capacitor of minimum 1.0 μF is recommended to connect between this pin and ground.
24	LDO2_EN	Enable for second internal LDO − Tie to VCC to setup LDO2 output at 12 V − Tie to 1/2VCC to setup LDO2 output at 3.3 V − Tie to ground to disable LDO
25	SKIP	DCM programming pin: − Ground this pin to setup automatic CCM−DCM transfer with 33 KHz minimum switching frequency limitation; − Connect this pin to VCC to force CCM operation; − Leave this pin open to give automatic CCM−DCM transfer with 33 KHz minimum switching frequency for channel 1 but forced CCM for channel 2.
26	5V_LDOEN	Enable for internal 5 V LDO.
27	5V_LDOOUT	The output for internal 5 V LDO. A capacitor of minimum 4.7 μF is recommended to connect between this pin and ground.
28	5V_LDOBYP	5 V LDO bypass pin.
	E−Pad	GND.

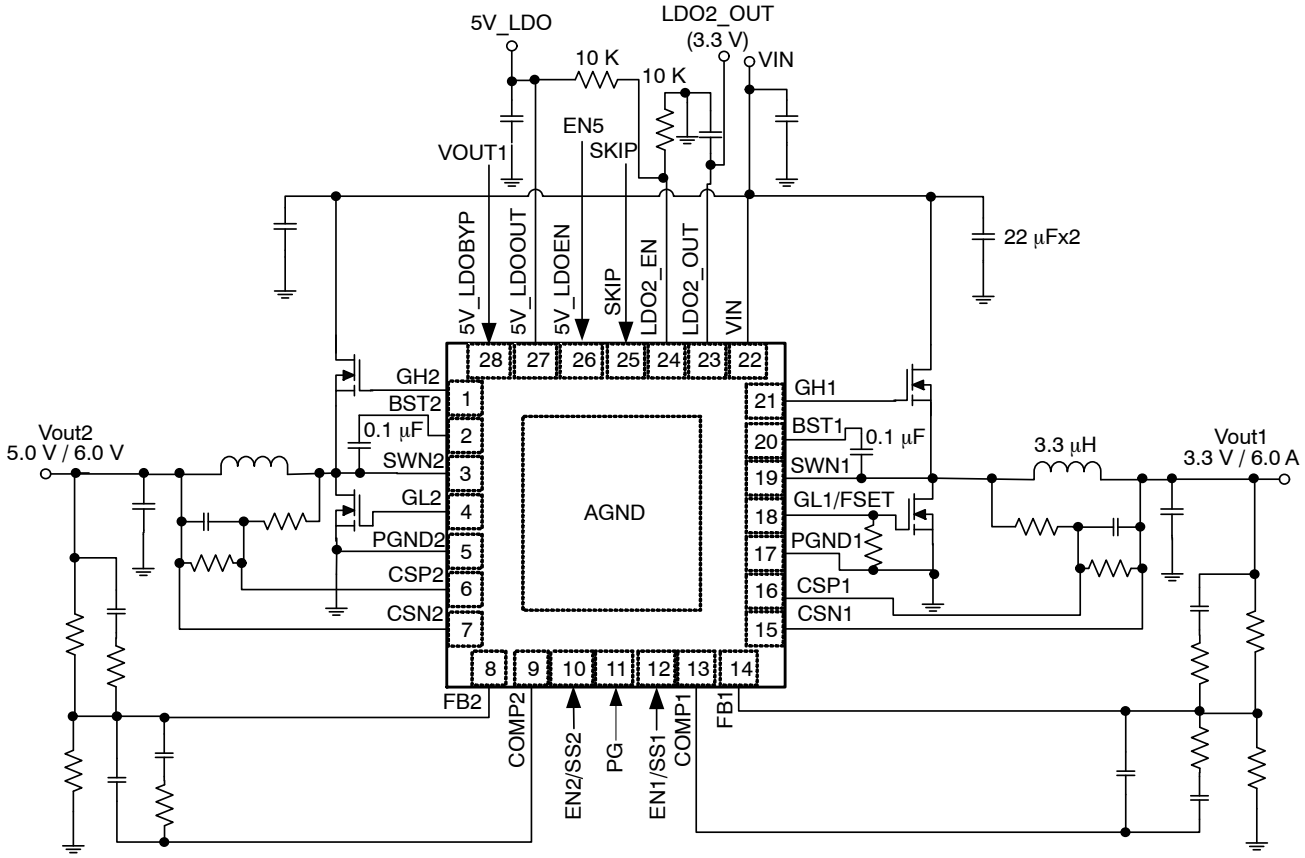

Figure 2. Application Circuit

Table 2. ABSOLUTE MAXIMUM RATINGS (Note 1)

VIN to GND, 5V_LDOEN to GND	−0.3 V (DC) to 28 V −1.0 V for T < 100 n
SWN1, SWN2 to GND	−0.6 V to 28 V, −10.0 V for T < 20 ns
BST1, BST2 to GND	−0.6 V to 34 V
GH1, GH2 to GND	−0.6 V to 34 V, −5.0 V for T < 100 ns
PGND1, PGND2	−0.3 V to 0.3 V
All other pin	−0.3 V to 6.0 V, −1.0 V for T < 100 ns
Operating Temperature Range, T_A	−40°C to +125°C
Junction Temperature, T_J	−40°C to +150°C
Storage Temperature Range, T_S	−55°C to +150°C
Pkg Power Dissipation (TA = +25°C), P_D (Note 2)	2.45 W max
	$R_{\theta JA}$ = 51°C/W
	$R_{\theta J-Lead}$ = 26°C/W
	$R_{\theta J-BoardTop}$ = 3.2°C/W

Stresses exceeding Maximum Ratings may damage the device. Maximum Ratings are stress ratings only. Functional operation above the Recommended Operating Conditions is not implied. Extended exposure to stresses above the Recommended Operating Conditions may affect device reliability.

1. Operation at −40°C to 0°C guaranteed by design, not production tested.
2. These data are based on JEDEC JESD51.7 highly conductive PCB multiple layer PCB (2 power and/or 2 ground planes 76 mm x 76 mm 1 oz each) connected by 20 thermal vias. 100 sq mm Cu heat spreader, 2 oz.

Table 3. ELECTRICAL CHARACTERISTICS
(VIN = 12 V, Vout = 5.0 V, TA = +25°C for typical value; −40°C < TA < 125°C for min/max values unless noted otherwise)

Parameter	Symbol	Test Conditions	Min	Typ	Max	Units
POWER SUPPLY						
Input Supply Voltage	VIN		5.5		28	V
INTERNAL LDO OUTPUT						
5V_LDOOUT Voltage		VIN =12 V, I_{5V_LDOOUT} = 60 mA	4.85	5.0	5.15	V
5V_LDOOUT Current		VIN =12 V, EN1 = EN2 = 0		100		mA
5V_LDO Switch to Bypass Threshold			4.7		4.95	V
5V_LDOOUT to 5V_IDOBYP Impedance		LDOBYP = 5 V		1.0		Ω
Hysteresis			100	200		mV
LDO2_OUT Voltage		LDO2_EN = VCC, VIN = 15 V, Load Current = 10 mA	11.4	12	12.6	V
		LDO2_EN = 1/2 VCC, VIN = 15 V, Load Current = 10 mA	3.2	3.3	3.46	V
LDO2_OUT Current			10	15		mA
SUPPLY CURRENT						
BSTx Quiescent Current	I_{BST}	V_{FB} = 1.5 V, EN = 5.0 (No Switching), GH and GL are open			0.3	mA
BSTx Shutdown Supply Current	I_{BST_SD}	EN = 0, BST = 5 V, SWN = 0			6.0	μA
Vin Pin Supply Current		Iload = 0		2.0		mA
Shutdown Current	I_{VIN_SD}	EN1, EN2, LDOEN, LDO2_EN = 0		5.0		μA
		EN1, EN2, LDOEN = 5 V, LDO2_EN = 5 V		1.15		mA
		EN1, EN2 = 0, LDOEN = 5 V, LDO2_EN = 2.5 V		1.57		mA
		EN1, EN2 = 0, LDOEN = 5 V, LDO2_EN = 0		1.11		mA
OSCILLATOR						
Oscillator Frequency	Fsw	Rset = 1.8 k	270	300	330	KHz
		Rset = 9.1 k	340	400	460	KHz
		Rset = 16 k	540	600	660	KHz
Oscillator Frequency Accuracy					±10	%
ERROR AMPLIFIER						
Open Loop DC Gain (Note 3)			80			dB
Open Loop Unity Gain Bandwidth (Note 3)	$F_{0dB,EA}$		10	15		MHz
Open Loop Phase Margin (Note 3)			60			deg
Input Bias Current (Note 3)			−200		200	nA
Input Offset Voltage (Note 3)		V+ = V− = 0.8 V	−1.0		1.0	mV
Slew Rate		COMP pin to GND = 10 pF		2.5		V/μs
Maximum Output Voltage		10 mV of overdrive, I_{SOURCE} = 2.0 mA	3.3			V
Minimum Output Voltage		10 mV of overdrive, I_{SINK} = 2.0 mA			0.3	V
Output Source Current		10 mV of overdrive, V_{out} = 3.5 V	2.0			mA
Output Sink Current		10 mV of overdrive, V_{out} = 1.0 V	2.0			mA

3. Guaranteed by Design
4. Parameters are for design only, not for product test.

Table 3. ELECTRICAL CHARACTERISTICS
(VIN = 12 V, Vout = 5.0 V, TA = +25°C for typical value; −40°C < TA < 125°C for min/max values unless noted otherwise)

Parameter	Symbol	Test Conditions	Min	Typ	Max	Units
FEEDBACK VOLTAGE						
Reference Voltage	V_{REF}		792	800	808	mV
Feedback Voltage Line Regulation		5V_LDOOUT = 4.5 V ~ 5.5 V			0.25	%/V
DIFFERENTIAL CURRENT SENSE AMPLIFIER						
CSP and CSN Common−mode Input Voltage Range		Refer to AGND	−0.2		5.5	V
Current Sense Input to Output Gain		(CSP)−(CSN) = 10 mV		200		μA/V
Differential Input Voltage Range			−60		60	mV
OVER CURRENT PROTECTION						
OCP Threshold Voltage		V(CSP)−V(CSN) @ 25°C	35	40	45	mV
		V(CSP)−V(CSN) @ 0 ~ 85°C	34		46	mV
OCP Trigger Clock Tick		After EN, latch off after trigger # clocks		16		
Short Circuit OCP Threshold Voltage				60		mV
GATE DRIVER						
GH Pull−High Resistance	RH_GH	Source, V(BST−GH) = 0.1		2.5		Ω
GH Pull−Low Resistance	RL_GH	Sink, V(GH−SWN) = 0.1 V		1.5		Ω
GL Pull−High Resistance	RH_GL	Source, V(VCC−GL) = 0.1 V		2.0		Ω
GL Pull−Low Resistance	RL_GL	Sink, V(GL−PGND) = 0.1 V		1.0		Ω
Dead Time		GL off to GH on	10	20	30	ns
		GH off to GL on	10	20	30	ns
VOLTAGE MONITOR						
VCC Start Threshold			3.7	4.2	4.4	V
VCC UVLO Hysteresis			100	200	300	mV
Power Good Threshold		PG in from lower	91.5	95	97.5	%
		PG hysteresis		5.0		%
Power Good High Delay		After soft start is done		500		μs
Power Good Low Delay				1.5		μs
Power Good Sink Current		PG = 0.4 V	2.5	5.0		mA
Output Overvoltage Rising Threshold		After VCC POR, with respect to VFB	106	110	118	%Vref
Overvoltage Fault Blanking Time				1.5		μs
Output Under-Voltage Trip Threshold		After soft start, with respect to VFB	45	50	55	%Vref
Under-voltage Protection Blanking Time				t_{ss}		ms
Under−voltage Protection Delay				2.0		ms
PWM						
Minimum Controllable ON Time				50		ns
Minimum OFF Time				100	150	ns
PWM Ramp Offset			0.36	0.4	0.44	V
PWM Ramp Amplitude		VIN = 5 V		1.25		V
		VIN = 12 V		3.0		V
PWM Comparator Propagation Delay		10 mV to 20 mV overdrive		25	30	ns

3. Guaranteed by Design
4. Parameters are for design only, not for product test.

Table 3. ELECTRICAL CHARACTERISTICS
(VIN = 12 V, Vout = 5.0 V, TA = +25°C for typical value; −40°C < TA < 125°C for min/max values unless noted otherwise)

Parameter	Symbol	Test Conditions	Min	Typ	Max	Units
INTERNAL BST DIODE						
Forward Voltage Drop		IF = 10 mA, TA = 25°C		0.3		V
Reverse−bias Leakage Current		VBST = 34 V, VSW = 28 V, TA = 25°C		0.1	6.0	μA
SOFT−STOP						
Output Discharge On−Resistance		EN = 0, Vout = 0.5 V		20	30	Ω
Discharge Threshold in Vcc				0.7		V
SOFT−START						
Soft−Start Ramp Time	tss	From EN assertion to Vout ready	6.0	12	18	ms
EN						
EN1/EN2 Threshold		HI Threshold	1.4			V
		LO Threshold			0.4	V
		Hysteresis		200		mV
		Source Current, pull high to 5 V internally		0.75		μA
5V_LDOEN Threshold		HI Threshold	1.4			V
		LO Threshold			0.4	V
		Hysteresis		200		mV
LDO2_EN		Vout = 3.3 V	1.5	2.5	3.5	V
		Vout = 12 V	4.95		5.5	V
		Vout = 0			0.4	V
THERMAL SHUTDOWN						
Thermal Shutdown Threshold (Note 3)				150		°C
Thermal Shutdown Hysteresis (Note 3)				40		°C

3. Guaranteed by Design
4. Parameters are for design only, not for product test.

DETAILED DESCRIPTION

Overview

The NCP81148 is a cost effective dual output controllers with three selectable LDO outputs suitable for desktop and server application. It provides one independent LDO which is 5 V/100 mA, two selectable LDOs which is 12 V or 3.3 V/10 mA, and two synchronous PWM controllers that incorporate all the control and protection circuitry necessary to satisfy a wide range of applications. The NCP81148 PWM switchers employ adaptive−ripple control to provide seamless transition between CCM and DCM while maintain high efficiency during light load. It also provides fast transient response and excellent stability. The features of the NCP81148 include a precision reference, selectable switching frequency, an error amplifier, adaptive gate driver, programmable soft−start, and very low shutdown current. The protection features of the NCP81148 include fixed/programmable soft−start, over−current protection, wide input voltage range, power good monitor, over voltage and under voltage protection, built in output discharge and thermal shutdown.

5V LDO and Switchover (5V_LDOOUT)

The NCP81148 includes a high−current (100 mA) linear regulator that is configured for 5 V operation, which is bias supply necessary to power up the main analog supply rail for the IC and provides the current for the gate drivers. When the 3.3 V switching regulator is running and the 5 V switching regulator is still off (EN2 = 0), the 5 V linear regulator can provide about 80 mA to external load, while the remaining 20 mA is consumed by the 3.3 V regulator's MOSFETS' switching, giving typical switching frequency and MOSFETS' gate capaciatance. Once the 5 V switching regulator is enabled, this 5V_LDO may be bypassed using 5V_LDOBYP input. Typically, a capacitor with 10−μF or higher is needed to keep 5V_LDO stable. Additionally, if VOUT2 voltage exceeds 4.75 V, the 5V_LDO is switched off and VOUT2 (5V buck output) is connected to 5V_LDOOUT through a bypass FET (typical 1 ohm) to provide 5 V rail. With this bypass function, the whole system efficiency is improving. The 5V_LDOEN pin is high voltage and can be connected to VIN voltage. However, 5V_LDOEN is not allowed to go beyond VIN pin voltage.

LDO2_OUT

The NCP81148 includes 10 mA linear regulators that can be programmed for 12 V or 3.3 V operations. LDO2 can be enabled only when VCC is present. When LDO2_EN is connected to VCC, LDO2_OUT is programmed at 12 V. When LDO2_EN is connected to 1/2VCC, LDO2_OUT is set at 3.3 V. Typically, a minimum capacitor with 1.0−μF or higher is needed to keep LDO2_OUT stable.

Reference Voltage

The NCP81148 incorporates an internal reference that allows output voltages as low as 0.8 V. The tolerance of the internal reference is guaranteed over the entire operating temperature range of the controller. The reference voltage is trimmed using a test configuration that accounts for error amplifier offset and bias currents.

Oscillator Frequency

A fixed precision oscillator is provided. The actual switching frequency is set at 300 KHz, 400 KHz or 600 KHz by the resistor on GL1/FSET pin. The resistor and frequency can be referred to the table below.

FSET resistor	1.8 K	9.1 K	16 K
Switching Frequency	300 KHz	400 KHz	600 KHz

Error Amplifier

The error amplifier's primary function is to regulate the converter's output voltage using a resistor divider connected from the converter's output to the FB pin of the controller, as shown in the Applications Schematic. A type III compensation network must be connected around the error amplifier to stabilize the converter. It has a bandwidth of greater than 15 MHz, with open loop gain of at least 80 dB. The COMP output voltage is clamped to a level above the oscillator ramp in order to improve large−scale transient response.

Soft−Start

To limit the start−up inrush current, an internal soft start circuit is used to ramp up the reference voltage from 0 V to its final value linearly. The internal soft start time is 13 ms typically, from EN assertion to Vout ready. It includes a delay of 240 μs from EN assertion to the Vout ramp starting. 500 μs after both channel Vout ready, the PG (Power Good) is asserted.

Soft−Stop

Soft−Stop or discharge mode is always on during faults or disable. In this mode, a fault (UVP, OCP, TSD) or disable (EN) causes the output to be discharged through an internal 20−ohm transistor inside of VO terminal. The time constant of soft−stop is a function of output capacitance and the resistance of the discharge transistor.

Adaptive Non−Overlap Gate Driver

In a synchronous buck converter, a certain dead time is required between the low side drive signal and high side drive signal to avoid shoot through. During the dead time, the body diode of the low side FET free-wheels the current. The body diode has much higher voltage drop than that of the MOSFET, which reduces the efficiency significantly. The longer the body diode conducts, the lower the efficiency. NCP81148 implements adaptive dead time control to minimize the dead time, as well as preventing shoot through from happening.

Forced Pulse Width Modulation (FPWM Mode)

The device is operating as force PWM mode if SKIP is tied to VCC. Under this mode, the low−side gate driver signal is forced to be the complement of the high−side gate driver signal. This mode allows reverse inductor current, in such a way that it provides more accurate voltage regulation and better (fast) transient response. During the soft start operation, the NCP81148 automatically runs as FPWM mode regardless of the SKIP setting at either FPWM or SKIP mode to make sure to have smooth power up.

Power Save Mode (Skip Mode)

If the load current decreases, the converter will enter power save mode operation when SKIP pin is grounded. During power save mode, the converter skips switching and operates with reduced frequency but with minimum switching frequency of 33 KHz, which minimizes the quiescent current and maintains high efficiency. If SKIP pin is open, the channel 1 will enter power saving mode with reduced load but with minimum switching frequency of 33 KHz and channel 2 will stay in forced PWM mode.

Transient Response Enhancement (TRE)

For a conventional trailing−edge PWM controller in CCM, the minimum response delay time is one switching period in the worst case. To further improve transient response, a transient response enhancement circuitry is introduced to the NCP81148. The controller continuously monitors the COMP signal, which is the output voltage of the error amplifier, to detect load transient events. A desired stable close−loop system with the NCP81148 has a ripple voltage in the COMP signal, which peak−to−peak value is normally in a range from 200 mV to 500 mV. There is a threshold voltage made in a way that a filtered COMP signal pluses an offset voltage. Once a large load transient occurs, the COMP signal is possible to exceed the threshold and then TRE is tripped in a short period, which is typically around one normal switching cycle. In this short period, the controller runs at higher frequency and therefore has faster response. After that the controller comes back to normal operation.

PROTECTIONS

Under Voltage Lockout (UVLO)

There are two undervoltage lock out protections (UVLO) in NCP81148. One is for V_{IN}, which has a typical trip threshold voltage 3.9 V and trip hysteresis 200 mV. The other is for VCC (5V_LDOOUT serves as VCC internally), which has a typical trip threshold voltage 4.2 V and trip hysteresis 300 mV. If either is triggered, the device resets and waits for the voltage to rise up over the threshold voltage and restart the part. Please note this protection function DOES NOT trigger the fault counter to latch off the part.

Over Voltage Protection (OVP)

When VFB voltage is above 110% (typical) of the nominal VFB voltage, the top gate drive is turned off and the bottom gate drive is turned on trying to discharge the output. It over voltage condition still exists after 1.5 μs, an OV fault is set. The power good will go low at the same time. The bottom gate drive will be turned off when VFB drops below the under voltage threshold. If then over voltage condition happens again, the high side MOSFET stays off and low side MOSFET will turn on again till output voltage drops down to under voltage threshold. Then low side gate will be off. EN resets or power recycle the device can exit the fault.

Under Voltage Protection (UVP)

An UVP circuit monitors the VFB voltage to detect under voltage event. The under voltage limit is 50% (typical) of the nominal VFB voltage. If the VFB voltage is below this threshold over 1 ms, an UV fault is set and the device is latched off such that both top and bottom gate drives are off. EN resets or power recycle the device can exit the fault. UVP is delayed for soft start period (8.5 ms) after EN goes high.

EN1 and EN2

EN1 and EN2 are logic level control signals to turn on or off buck converters individually. If ENx is below 0.4 V, the buck will be off. When ENx is above 1.8 V, the buck is turning on. In both ENx pins, there are about 0.75 μA source currents to pull them up to 5 V internally.

Power Good Monitor (PG)

NCP81148 provides window comparator to monitor the output voltage. When the output voltage is above 95% of regulation voltage, the power good pin outputs a high signal. Otherwise, PG stays low. The PG pin is open drain 5−mA pull down output. During startup, PG stays low until the feedback voltage is within the specified range for 128 clocks or about 0.5 ms. If feedback voltage falls outside the tolerance band, the PG pin goes low within microseconds.

Over Current Protection (OCP)

The NCP81148 protects converter if over−current occurs. The current through each channel is continuously monitored with differential current sense. Current limit threshold Vth_OC between CS+ and CS− is internally fixed to 40 mV. The current limit can be programmed by inductor's DCR and current sensing resistor divider with Rs1 and Rs2.

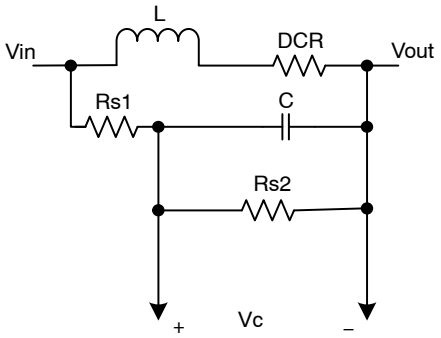

Figure 3. X

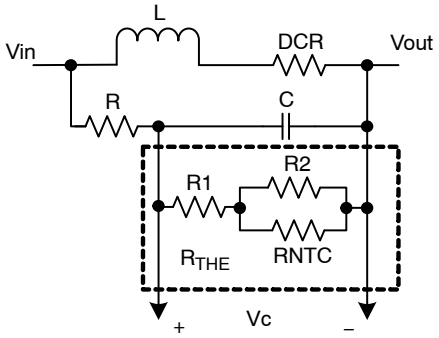

Figure 4. X + 1

The Rs1, Rs2 and C can be calculated as:

$$C \cdot \left(R_{S1} // R_{S2}\right) = \frac{L}{DCR}$$

The inductor peak current limit is:

$$I_{LIM(Peak)} = \frac{V_{th_DC}}{k \cdot DCR}, \text{where } k = \frac{R_{S2}}{R_{S1} + R_{S2}}$$

The DC current limit is:

$$I_{LIM} = I_{LIM(Peak)} - \frac{V_O \cdot (V_{in} - V_O)}{2 \cdot V_{in} \cdot f_{SW} \cdot L}$$

where Vin is the input supply voltage of the power stage, and fsw is normal switching frequency.

Fig. X+1 shows NTC resistor network to compensate the temperature drift of DCR.

If inductor current exceeds the current threshold, the high−side gate driver will be turned off cycle−by−cycle. In the mean time, an internal OC fault timer will be triggered. If the fault still exists after 16 clocks, the part latches off, both the high−side MOSFET and the low−side MOSFET are turned off. If the sensed current reaches 60 mV, the part will latch off right away. The fault remains set until the system has shutdown and re−applied VCC and/or the enable signal EN is toggled.

Pre−Bias Startup

In some applications the controller will be required to start switching when its output capacitors are charged anywhere from slightly above 0 V to just below the regulation voltage. This situation occurs for a number of reasons: the converter's output capacitors may have residual charge on them or the converter's output may be held up by a low current standby power supply. NCP81148 supports pre−bias start up by holding Low side FETs off till soft start ramp reaches the FB pin voltage.

Thermal Shutdown

The NCP81148 protects itself from over heating with an internal thermal monitoring circuit. If the junction temperature exceeds the thermal shutdown threshold the voltage at the COMP pin will be pulled to GND and both the upper and lower MOSFETs will be shut OFF.

QFN28 4x4, 0.4P
CASE 485AR−01
ISSUE A

DATE 20 NOV 2009

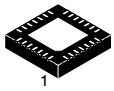

SCALE 2:1

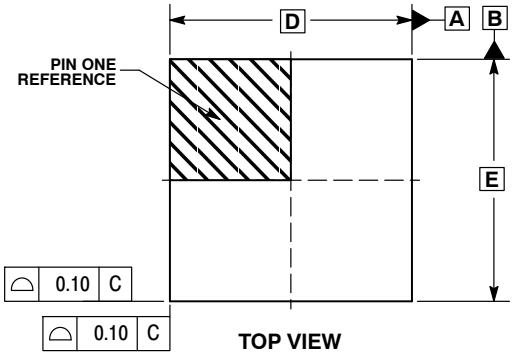

TOP VIEW

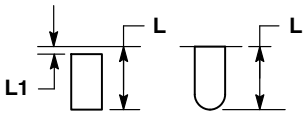

DETAIL A
ALTERNATE TERMINAL CONSTRUCTIONS

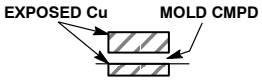

DETAIL B
ALTERNATE CONSTRUCTION

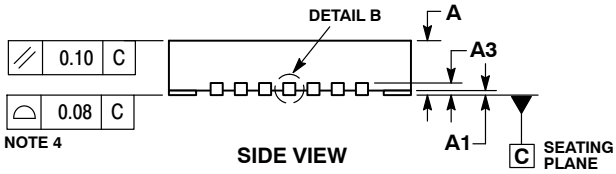

SIDE VIEW

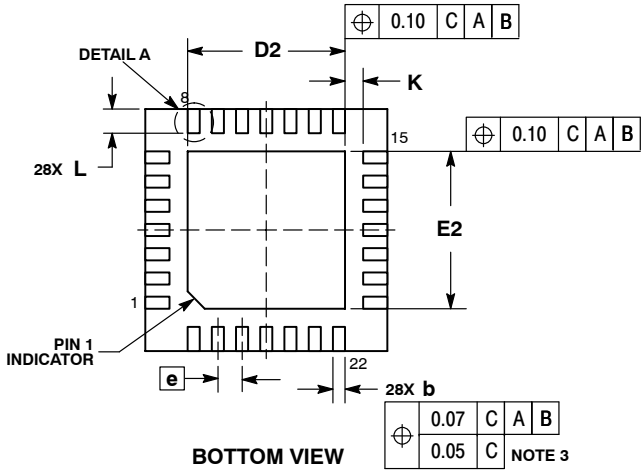

BOTTOM VIEW

NOTES:
1. DIMENSIONING AND TOLERANCING PER ASME Y14.5M, 1994.
2. CONTROLLING DIMENSION: MILLIMETERS.
3. DIMENSION b APPLIES TO PLATED TERMINAL AND IS MEASURED BETWEEN 0.15 AND 0.30 MM FROM THE TERMINAL TIP.
4. COPLANARITY APPLIES TO THE EXPOSED PAD AS WELL AS THE TERMINALS.

	MILLIMETERS	
DIM	MIN	MAX
A	0.80	1.00
A1	0.00	0.05
A3	0.20 REF	
b	0.15	0.25
D	4.00 BSC	
D2	2.50	2.70
E	4.00 BSC	
E2	2.50	2.70
e	0.40 BSC	
K	0.30 REF	
L	0.30	0.50
L1	–––	0.15

GENERIC MARKING DIAGRAM*

XXXXX = Specific Device Code
A = Assembly Location
L = Wafer Lot
Y = Year
W = Work Week
▪ = Pb−Free Package
(Note: Microdot may be in either location)

*This information is generic. Please refer to device data sheet for actual part marking. Pb−Free indicator, “G”, may or not be present.

RECOMMENDED MOUNTING FOOTPRINT

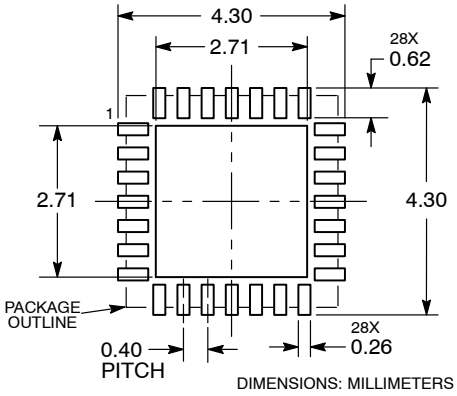

DIMENSIONS: MILLIMETERS

DOCUMENT NUMBER:	98AON30349E	Electronic versions are uncontrolled except when accessed directly from the Document Repository. Printed versions are uncontrolled except when stamped “CONTROLLED COPY” in red.
DESCRIPTION:	QFN28 4X4, 0.4P	PAGE 1 OF 1

onsemi and onsemi are trademarks of Semiconductor Components Industries, LLC dba **onsemi** or its subsidiaries in the United States and/or other countries. **onsemi** reserves the right to make changes without further notice to any products herein. **onsemi** makes no warranty, representation or guarantee regarding the suitability of its products for any particular purpose, nor does **onsemi** assume any liability arising out of the application or use of any product or circuit, and specifically disclaims any and all liability, including without limitation special, consequential or incidental damages. **onsemi** does not convey any license under its patent rights nor the rights of others.

onsemi, onsemi, and other names, marks, and brands are registered and/or common law trademarks of Semiconductor Components Industries, LLC dba "**onsemi**" or its affiliates and/or subsidiaries in the United States and/or other countries. **onsemi** owns the rights to a number of patents, trademarks, copyrights, trade secrets, and other intellectual property. A listing of **onsemi**'s product/patent coverage may be accessed at www.onsemi.com/site/pdf/Patent−Marking.pdf. **onsemi** reserves the right to make changes at any time to any products or information herein, without notice. The information herein is provided "as−is" and **onsemi** makes no warranty, representation or guarantee regarding the accuracy of the information, product features, availability, functionality, or suitability of its products for any particular purpose, nor does **onsemi** assume any liability arising out of the application or use of any product or circuit, and specifically disclaims any and all liability, including without limitation special, consequential or incidental damages. Buyer is responsible for its products and applications using **onsemi** products, including compliance with all laws, regulations and safety requirements or standards, regardless of any support or applications information provided by **onsemi**. "Typical" parameters which may be provided in **onsemi** data sheets and/or specifications can and do vary in different applications and actual performance may vary over time. All operating parameters, including "Typicals" must be validated for each customer application by customer's technical experts. **onsemi** does not convey any license under any of its intellectual property rights nor the rights of others. **onsemi** products are not designed, intended, or authorized for use as a critical component in life support systems or any FDA Class 3 medical devices or medical devices with a same or similar classification in a foreign jurisdiction or any devices intended for implantation in the human body. Should Buyer purchase or use **onsemi** products for any such unintended or unauthorized application, Buyer shall indemnify and hold **onsemi** and its officers, employees, subsidiaries, affiliates, and distributors harmless against all claims, costs, damages, and expenses, and reasonable attorney fees arising out of, directly or indirectly, any claim of personal injury or death associated with such unintended or unauthorized use, even if such claim alleges that **onsemi** was negligent regarding the design or manufacture of the part. **onsemi** is an Equal Opportunity/Affirmative Action Employer. This literature is subject to all applicable copyright laws and is not for resale in any manner.

ADDITIONAL INFORMATION

TECHNICAL PUBLICATIONS:
Technical Library: www.onsemi.com/design/resources/technical−documentation
onsemi Website: www.onsemi.com

ONLINE SUPPORT: www.onsemi.com/support
For additional information, please contact your local Sales Representative at
www.onsemi.com/support/sales