Isolated High Current IGBT Gate Driver

NCV57000

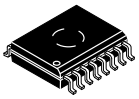

1

SOIC−16 WB
CASE 751G−03

NCV57000 is a high−current single channel IGBT driver with internal galvanic isolation, designed for high system efficiency and reliability in high power applications. Its features include complementary inputs, open drain FAULT and Ready outputs, active Miller clamp, accurate UVLOs, DESAT protection, soft turn−off at DESAT, and separate high and low (OUTH and OUTL) driver outputs for system design convenience. NCV57000 accommodates both 5 V and 3.3 V signals on the input side and wide bias voltage range on the driver side including negative voltage capability. NCV57000 provides > 5 kVrms (UL1577 rating) galvanic isolation and > 1200 V_{IORM} (working voltage) capabilities. NCV57000 is available in the wide−body SOIC−16 package with guaranteed 8 mm creepage distance between input and output to fulfill reinforced safety insulation requirements.

Features

- High Current Output (+4/−6 A) at IGBT Miller Plateau Voltages
- Low Output Impedance for Enhanced IGBT Driving
- Short Propagation Delays with Accurate Matching
- Active Miller Clamp to Prevent Spurious Gate Turn−on
- DESAT Protection with Programmable Delay
- Negative Voltage (Down to −9 V) Capability for DESAT
- Soft Turn Off During IGBT Short Circuit
- IGBT Gate Clamping During Short Circuit
- IGBT Gate Active Pull Down
- Tight UVLO Thresholds for Bias Flexibility
- Wide Bias Voltage Range including Negative VEE2
- 3.3 V to 5 V Input Supply Voltage
- Designed for AEC−Q100 Certification
- 5000 V Galvanic Isolation (to meet UL1577 Requirements)
- 1200 V Working Voltage (per VDE0884−11 Requirements)
- High Transient Immunity
- High Electromagnetic Immunity
- These Devices are Pb−Free, Halogen Free and are RoHS Compliant

Typical Applications

- Automotive Power Supplies
- HEV/EV Powertrain
- OBC
- BSG
- EV Charger
- PTC Heater

MARKING DIAGRAM

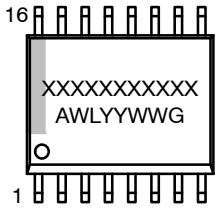

XXXXX	= Specific Device Code
A	= Assembly Location
WL	= Wafer Lot
YY	= Year
WW	= Work Week
G	= Pb−Free Package

*This information is generic. Please refer to device data sheet for actual part marking. Pb−Free indicator, “G” or microdot “ ▪”, may or may not be present.

PIN ASSIGNMENT

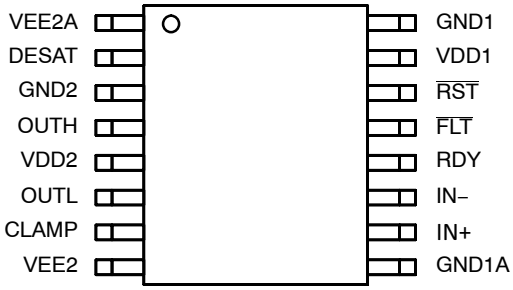

ORDERING INFORMATION

See detailed ordering and shipping information on page 8 of this data sheet.

© Semiconductor Components Industries, LLC, 2019

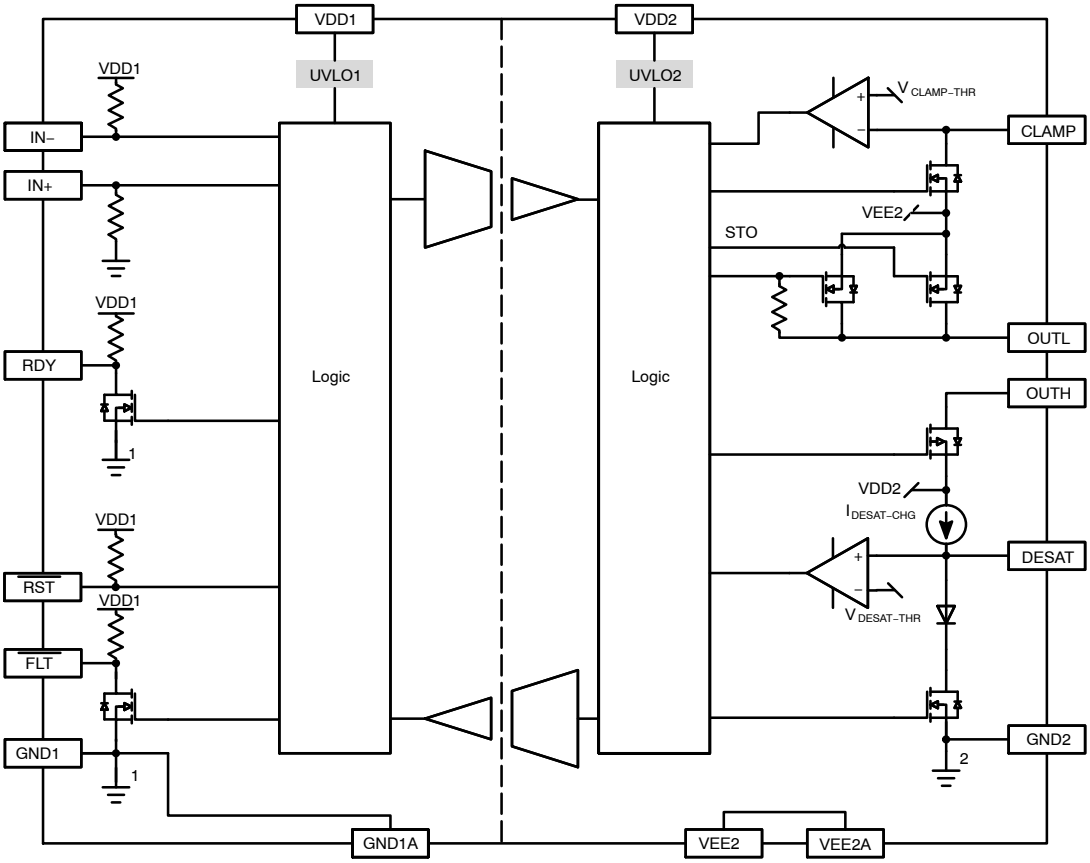

Figure 1. Simplified Block Diagram

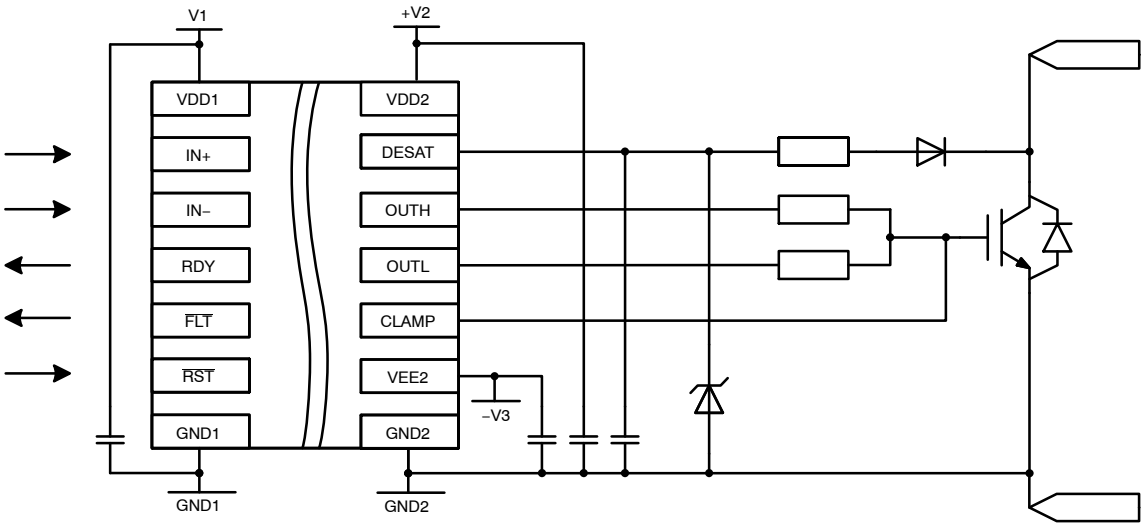

Figure 2. Simplified Application Schematics

PIN DESCRIPTION

Pin Name	No.	I/O	Description
V_{EE2A}	1	Power	Output side negative power supply. A good quality bypassing capacitor is required from these pins to GND2 and should be placed close to the pins for best results. Connect it to GND2 for unipolar supply application.
V_{EE2}	8		
DESAT	2	I/O	Input for detecting the desaturation of IGBT due to a short circuit condition. An internal constant current source $I_{DESAT-CHG}$ charging an external capacitor connected to this pin allows a programmable blanking delay every ON cycle before DESAT fault is processed, thus preventing false triggering. When the DESAT voltage goes up and reaches $V_{DESAT-THR}$, the output is driven low. Further, the /FLT output is activated, please refer to Figure 5 on page 10. A 5 μs mute time apply to IN+ and IN− once DESAT occurs.
GND2	3	Power	Output side gate drive reference connecting to IGBT emitter or FET source.
OUTH	4	O	Driver high output that provides the appropriate drive voltage and source current to the IGBT/FET gate.
V_{DD2}	5	Power	Output side positive power supply. The operating range for this pin is from UVLO2 to its maximum allowed value. A good quality bypassing capacitor is required from this pin to GND2 and should be placed close to the pins for best results.
OUTL	6	O	Driver low output that provides the appropriate drive voltage and sink current to the IGBT/FET gate. OUTL is actively pulled low during start−up and under Fault conditions.
CLAMP	7	I/O	Provides clamping for the IGBT/FET gate during the off period to protect it from parasitic turn−on. Its internal N FET is turned on when the voltage of this pin falls below V_{EE2} + $V_{CLAMP-THR}$. It is to be tied directly to IGBT/FET gate with minimum trace length for best results.
GND1A	9	Power	Input side ground reference.
GND1	16		
IN+	10	I	Non inverted gate driver input. It is internally clamped to V_{DD1} and has a pull−down resistor of 50 kΩ to ensure that output is low in the absence of an input signal. A minimum positive going pulse−width is required at IN+ before OUTH/OUTL respond.
IN−	11	I	Inverted gate driver input. It is internally clamped to V_{DD1} and has a pull−up resistor of 50 kΩ to ensure that output is low in the absence of an input signal. A minimum negative going pulse−width is required at IN− before OUTH/OUTL respond.
RDY	12	O	Power good indication output, active high when V_{DD1} and V_{DD2} are both good. There is an internal 50 kΩ pull−up resistor connected to this pin. Multiple of them from different drivers can be ”OR”ed together. OUTH/OUTL remain low when RDY is low. Short time delays may apply. See Figure 4 on page 9 for details.
/FLT	13	O	Fault output (active low) that allows communication to the main controller that the driver has encountered a desaturation condition and has deactivated the output. There is an internal 50 kΩ pull−up resistor connected to this pin. Multiple of them from different drivers can be ”OR”ed together.
/RST	14	I	Reset input with an internal 50 kΩ pull−up resistor, active low to reset fault latch.
V_{DD1}	15	Power	Input side power supply (3.3 V to 5 V).

SAFETY AND INSULATION RATINGS

Symbol	Parameter		Value	Unit
	Installation Classifications per DIN VDE 0110/1.89 Table 1 Rated Mains Voltage	< 150 V_{RMS}	I – IV	
		< 300 V_{RMS}	I – IV	
		< 450 V_{RMS}	I – IV	
		< 600 V_{RMS}	I – IV	
		< 1000 V_{RMS}	I – III	
CTI	Comparative Tracking Index (DIN IEC 112/VDE 0303 Part 1)		600	
	Climatic Classification		40/100/21	
	Polution Degree (DIN VDE 0110/1.89)		2	
V_{PR}	Input−to−Output Test Voltage, Method b, V_{IORM} x 1.875 = V_{PR}, 100% Production Test with tm = 1 s, Partial Discharge < 5 pC		2250	V_{pk}
	Input−to−Output Test Voltage, Method a, V_{IORM} x 1.6 = V_{PR}, Type and Sample Test with tm = 10 s, Partial Discharge < 5 pC		–	V_{pk}
V_{IORM}	Maximum Repetitive Peak Voltage		1200	V_{pk}
V_{IOWM}	Maximum Working Insulation Voltage		870	V_{RMS}
V_{IOTM}	Highest Allowable Over Voltage		8400	V_{pk}
E_{CR}	External Creepage		8.0	mm
E_{CL}	External Clearance		8.0	mm
DTI	Insulation Thickness		17.3	um
T_{Case}	Safety Limit Values – Maximum Values in Failure; Case Temperature		150	°C
$P_{S,INPUT}$	Safety Limit Values – Maximum Values in Failure; Input Power		36	mW
$P_{S,OUTPUT}$	Safety Limit Values – Maximum Values in Failure; Output Power		1364	mW
R_{IO}	Insulation Resistance at TS, V_{IO} = 500 V		10^9	Ω

ABSOLUTE MAXIMUM RATINGS (Over operating free−air temperature range unless otherwise noted) (Note 1)

Symbol	Parameter	Minimum	Maximum	Unit
V_{DD1}−GND1	Supply voltage, input side	−0.3	6	V
V_{DD2}−GND2	Positive Power Supply, output side	−0.3	25	V
V_{EE2}−GND2	Negative Power Supply, output side	−10	0.3	V
V_{DD2}−V_{EE2} (V_{MAX2})	Differential Power Supply, output side	0	25	V
V_{OUTH}	Positive gate−driver output voltage	V_{EE2} − 0.3	V_{DD2} + 0.3	V
V_{OUTL}	Negative gate−driver output voltage	V_{EE2} − 0.3	V_{DD2} + 0.3	V
I_{PK-SRC}	Gate−driver output sourcing current (maximum pulse width = 10 μs, maximum duty cycle = 0.2%, V_{MAX2} = 23 V)	–	7.8	A
I_{PK-SNK}	Gate−driver output sinking current (maximum pulse width = 10 μs, maximum duty cycle = 0.2%, V_{MAX2} = 23 V)	–	7.1	A
$I_{PK-CLAMP}$	Clamp sinking current (maximum pulse width = 10 μs, maximum duty cycle = 0.2%, V_{CLAMP} = 2.5 V)	–	2.5	A
t_{CLP}	Maximum Short Circuit Clamping Time (I_{OUTH_CLAMP} = 500 mA)	–	10	μs
V_{LIM}−GND1	Voltage at IN+, IN−, /RST, /FLT, RDY	−0.3	V_{DD1} + 0.3	V
I_{LIM}−GND1	Output current of /FLT, RDY	–	10	mA
V_{DESAT}−GND2	Desat Voltage (Note 2)	−9	V_{DD2} + 0.3	V
V_{CLAMP}−GND2	Clamp Voltage	V_{EE2} − 0.3	V_{DD2} + 0.3	V
P_D	Power Dissipation (Note 3)	–	1400	mW
$T_{J(max)}$	Maximum Junction Temperature	−40	150	°C
T_{STG}	Storage Temperature Range	−65	150	°C
ESD_{HBM}	ESD Capability, Human Body Model (Note 4)	–	±2	kV
ESD_{CDM}	ESD Capability, Charged Device Model (Note 4)	–	±2	kV
MSL	Moisture Sensitivity Level	–	2	–
T_{SLD}	Lead Temperature Soldering Reflow, Pb−Free Versions (Note 5)	–	260	°C

Stresses exceeding those listed in the Maximum Ratings table may damage the device. If any of these limits are exceeded, device functionality should not be assumed, damage may occur and reliability may be affected.

1. Refer to ELECTRICAL CHARACTERISTICS and APPLICATION INFORMATION for Safe Operating Area.
2. The minimum value is verified by characterization with a single pulse of 100 mA for 100 μs.
3. The value is estimated for ambient temperature 25°C and junction temperature 150°C, 650 mm^2, 1 oz copper, 2 surface layers and 2 internal power plane layers. Power dissipation is affected by the PCB design and ambient temperature.
4. This device series incorporates ESD protection and is tested by the following methods:
   ESD Human Body Model tested per AEC−Q100−002 (EIA/JESD22−A114)
   ESD Charged Device Model tested per AEC−Q100−011 (EIA/JESD22−C101)
   Latchup Current Maximum Rating: ≤100 mA per JEDEC standard: JESD78, 125°C
5. For information, please refer to our Soldering and Mounting Techniques Reference Manual, SOLDERRM/D.

THERMAL CHARACTERISTICS

Symbol	Parameter	Conditions	Value	Unit
$R_{\theta JA}$	Thermal Resistance, Junction−to−Air	100 mm^2, 1 oz Copper, 1 Surface Layer	114	°C/W
		650 mm^2, 1 oz Copper, 2 Surface Layers and 2 Internal Power Plane Layers	62	

OPERATING RANGES (Note 6)

Symbol	Parameter	Min	Max	Unit
V_{DD1}−GND1	Supply voltage, input side	UVLO1	5.5	V
V_{DD2}−GND2	Positive Power Supply, output side	UVLO2	24	V
V_{EE2}−GND2	Negative Power Supply, output side	−10	0	V
V_{DD2}−V_{EE2} (V_{MAX2})	Differential Power Supply, output side	0	24	V
V_{IL}	Low level input voltage at IN+, IN−, /RST	0	0.3 X V_{DD1}	V
V_{IH}	High level input voltage at IN+, IN−, /RST	0.7 X V_{DD1}	V_{DD1}	V
$\|dV_{ISO}/dt\|$	Common Mode Transient Immunity	100	–	kV/μs
T_A	Ambient Temperature	−40	125	°C

Functional operation above the stresses listed in the Recommended Operating Ranges is not implied. Extended exposure to stresses beyond the Recommended Operating Ranges limits may affect device reliability.

6. Refer to ELECTRICAL CHARACTERISTICS and APPLICATION INFORMATION for Safe Operating Area.

ISOLATION CHARACTERISTICS

Symbol	Parameter	Conditions	Min	Typ	Max	Unit
$V_{ISO, input-output}$	Input−Output Isolation Voltage	T_A = 25°C, Relative Humidity < 50%, t = 1.0 minute, I_{I-O} 10 A, 50 Hz (See Note 7, 8, 9)	5000	–	–	V_{RMS}
R_{ISO}	Isolation Resistance	V_{I-O} = 500 V (See Note 7)	–	10^{11}	–	Ω

7. Device is considered a two−terminal device: pins 1 to 8 are shorted together and pins 9 to 16 are shorted together
8. 5,000 V_{RMS} for 1−minute duration is equivalent to 6,000 V_{RMS} for 1−second duration.
9. The input−output isolation voltage is a dielectric voltage rating per UL1577. It should not be regarded as an input−output continuous voltage rating. For the continuous working voltage rating, refer to equipment−level safety specification or DIN VDE V 0884−11 Safety and Insulation Ratings Table

ELECTRICAL CHARACTERISTICS (V_{DD1} = 5 V, V_{DD2} = 15 V, V_{EE2} = −8 V. For typical values T_A = 25°C, for min/max values, T_A is the operating ambient temperature range that applies, unless otherwise noted)

Symbol	Parameter	Test Condition	Min	Typ	Max	Unit
VOLTAGE SUPPLY						
$V_{UVLO1-OUT-ON}$	UVLO1 Output Enabled		–	–	3.05	V
$V_{UVLO1-OUT-OFF}$	UVLO1 Output Disabled		2.4	–	–	V
$V_{UVLO1-HYST}$	UVLO1 Hysteresis		0.125	–	–	V
$V_{UVLO2-OUT-ON}$	UVLO2 Output Enabled		13.2	13.5	13.8	V
$V_{UVLO2-OUT-OFF}$	UVLO2 Output Disabled		12.2	12.5	12.8	V
$V_{UVLO2-HYST}$	UVLO2 Hysteresis		–	1		V
I_{DD1-0}	Input Supply Quiescent Current Output Low	IN+ = Low, IN− = Low RDY = High, /FLT = High	–	1	2	mA
$I_{DD1-100}$	Input Supply Quiescent Current Output High	IN+ = High, IN− = Low RDY = High, /FLT = High	–	4.8	6	mA
I_{DD2-0}	Output Positive Supply Quiescent Current, Output Low	IN+ = Low, IN− = Low RDY = High, /FLT = High, no load	–	3.3	4	mA
$I_{DD2-100}$	Output Positive Supply Quiescent Current, Output High	IN+ = High, IN− = Low RDY = High, /FLT = High, no load	–	3.6	4	mA
I_{EE2-0}	Output Negative Supply Quiescent Current, Output Low	IN+ = High, IN− = Low, no load	–	0.4	2	mA
$I_{EE2-100}$	Output Negative Supply Quiescent Current, Output High	IN+ = High, IN− = Low, no load	–	0.2	2	mA

ELECTRICAL CHARACTERISTICS (V_{DD1} = 5 V, V_{DD2} = 15 V, V_{EE2} = −8 V. For typical values T_A = 25°C, for min/max values, T_A is the operating ambient temperature range that applies, unless otherwise noted) (continued)

Symbol	Parameter	Test Condition	Min	Typ	Max	Unit
LOGIC INPUT AND OUTPUT						
V_{IL}	IN+, IN−, /RST Low Input Voltage		–	–	0.3 x V_{DD1}	V
V_{IH}	IN+, IN−, /RST High Input Voltage		0.7 x V_{DD1}	–	–	V
$V_{IN-HYST}$	Input Hysteresis Voltage		–	0.15 x V_{DD1}	–	V
I_{IN-L}, I_{RST-L}	IN−, /RST Input Current (50 kΩ pull−up resistor)	V_{IN-}/V_{RST} = 0 V	–	−100	–	μA
I_{IN+H}	IN+ Input Current (50 kΩ pull−down resistor)	V_{IN+} = 5 V	–	100	–	μA
I_{RDY-L}, I_{FLT-L}	RDY, /FLT Pull−up Current (50 kΩ pull−up resistor)	V_{RDY}/V_{FLT} = Low	–	100	–	μA
V_{RDY-L}, V_{FLT-L}	RDY, /FLT Low Level Output Voltage	I_{RDY}/I_{FLT} = 5 mA	–	–	0.3	V
t_{MIN1}	Input Pulse Width of IN+, IN− for No Response at Output		–	–	10	ns
t_{MIN2}	Input Pulse Width of IN+, IN− for Guaranteed Response at Output		40	–	–	ns
$t_{RST-MIN}$	Pulse Width of /RST for Resetting /FLT		800	–	–	ns
DRIVER OUTPUT						
V_{OUTL1}	Output Low State (V_{OUTL} − V_{EE2})	I_{SINK} = 200 mA	–	0.1	0.2	V
V_{OUTL3}		I_{SINK} = 1.0 A, T_A = 25°C	–	0.5	0.8	
V_{OUTH1}	Output High State (V_{DD2} − V_{OUTH})	I_{SRC} = 200 mA	–	0.3	0.5	V
V_{OUTH3}		I_{SRC} = 1.0 A, T_A = 25°C	–	0.8	1	
$I_{PK-SNK1}$	Peak Driver Current, Sink (Note 10)	V_{OUTH} = 7.9 V	–	7.1	–	A
$I_{PK-SRC1}$	Peak Driver Current, Source (Note 10)	V_{OUTL} = −5 V	–	7.8	–	A
MILLER CLAMP						
V_{CLAMP}	Clamp Voltage (V_{CLAMP} − V_{EE2})	I_{CLAMP} = 2.5 A, T_A = 25°C	–	1.3	1.7	V
		I_{CLAMP} = 2.5 A, T_A = −40°C to 125°C	–	–	2.7	
$V_{CLAMP-THR}$	Clamp Activation Threshold (V_{CLAMP} − V_{EE2})		1.5	2	2.5	V
IGBT SHORT CIRCUIT CLAMPING						
$V_{CLAMP-OUTH}$	Clamping Voltage, Sourcing (V_{OUTH} − V_{DD2})	IN+ = Low, IN− = High, $I_{CLAMP-OUTH}$ = 500 mA (pulse test, t_{CLPmax} = 10 μs)	–	0.9	1	V
$V_{CLAMP-OUTL}$	Clamping Voltage, Sinking (V_{OUTL} − V_{DD2})	IN+ = High, IN− = Low, $I_{CLAMP-OUTL}$ = 500 mA (pulse test, t_{CLPmax} = 10 μs)	–	1.2	1.5	V
$V_{CLAMP-CLAMP}$	Clamping Voltage, Clamp (V_{CLAMP} − V_{DD2})	IN+ = High, IN− = Low, $I_{CLAMP-CLAMP}$ = 500 mA (pulse test, t_{CLPmax} = 10 μs)	–	1.4	1.6	V
DESAT PROTECTION						
$V_{DESAT-THR}$	DESAT Threshold Voltage		8.5	9	9.5	V
$V_{DESAT-NEG}$	DESAT Negative Voltage	I_{DESAT} = 1.5 mA	–	−8	–	V
$I_{DESAT-CHG}$	Blanking Charge Current	V_{DESAT} = 7 V	0.45	0.5	0.6	mA
$I_{DESAT-DIS}$	Blanking Discharge Current		–	50	–	mA

ELECTRICAL CHARACTERISTICS (V_{DD1} = 5 V, V_{DD2} = 15 V, V_{EE2} = −8 V. For typical values T_A = 25°C, for min/max values, T_A is the operating ambient temperature range that applies, unless otherwise noted) (continued)

Symbol	Parameter	Test Condition	Min	Typ	Max	Unit
DYNAMIC CHARACTERISTICS						
t_{PD-ON}	IN+, IN− to Output High Propagation Delay	C_{LOAD} = 10 nF V_{IH} to 10% of output change for PW > 150 ns. OUTH, OUTL and CLAMP pins are connected together	40	60	90	ns
t_{PD-OFF}	IN+, IN− to Output Low Propagation Delay	C_{LOAD} = 10 nF V_{IL} to 90% of output change for PW > 150 ns. OUTH, OUTL and CLAMP pins are connected together	40	66	90	ns
$t_{DISTORT}$	Propagation Delay Distortion (= t_{PD-ON} − t_{PD-OFF})	T_A = 25°C, PW > 150 ns	−15	−6	15	ns
		T_A = −40°C to 125°C, PW > 150 ns	−25	–	25	
$t_{DISTORT_TOT}$	Prop Delay Distortion between Parts	PW > 150 ns	−30	0	30	ns
t_{RISE}	Rise Time (see Fig. 3) (Note 10)	C_{LOAD} = 1 nF, 10% to 90% of Output Change	–	10	–	ns
t_{FALL}	Fall Time (see Fig. 3) (Note 10)	C_{LOAD} = 1 nF, 90% to 10% of Output Change	–	15	–	ns
t_{LEB}	DESAT Leading Edge Blanking Time (See Fig. 5)		–	450	–	ns
t_{FILTER}	DESAT Threshold Filtering Time (see Fig. 5)		–	320	–	ns
t_{STO}	Soft Turn Off Time (see Fig. 5)	C_{LOAD} = 10 nF, R_G = 10 Ω. V_{EE2} = 0 V	–	1.8	–	μs
		C_{LOAD} = 10 nF, R_G = 10 Ω	–	2.6	–	
t_{FLT}	Delay after t_{FILTER} to /FLT		–	450	–	ns
t_{RST}	/RST Rise to /FLT Rise Delay		–	23	–	ns
t_{RDY1O}	RDY High to Output High Delays (see Fig. 4)		–	55	–	ns
t_{RDY2O}						
t_{RDY1F}	$V_{UVLO2-OUT-OFF}$ to RDY Low Delays (see Fig. 4)		–	8	–	μs
t_{RDY2F}						

Product parametric performance is indicated in the Electrical Characteristics for the listed test conditions, unless otherwise noted. Product performance may not be indicated by the Electrical Characteristics if operated under different conditions.

10. Values based on design and/or characterization.

ORDERING INFORMATION

Device	Package Type	Shipping†
NCV57000DWR2G	SOIC−16 Wide Body (Pb−Free)	1,000 / Tape & Reel

†For information on tape and reel specifications, including part orientation and tape sizes, please refer to our Tape and Reel Packaging Specifications Brochure, BRD8011/D.

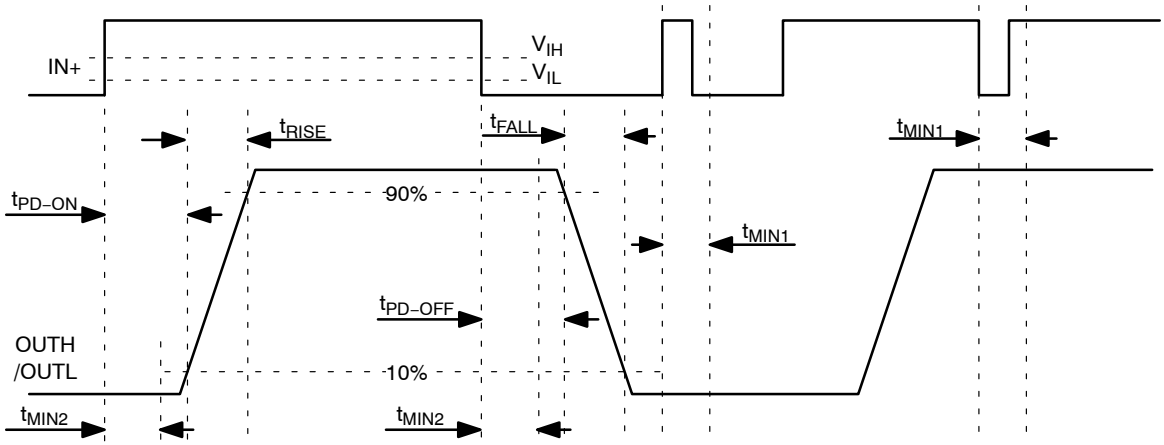

Figure 3. Propagation Delay, Rise and Fall Time

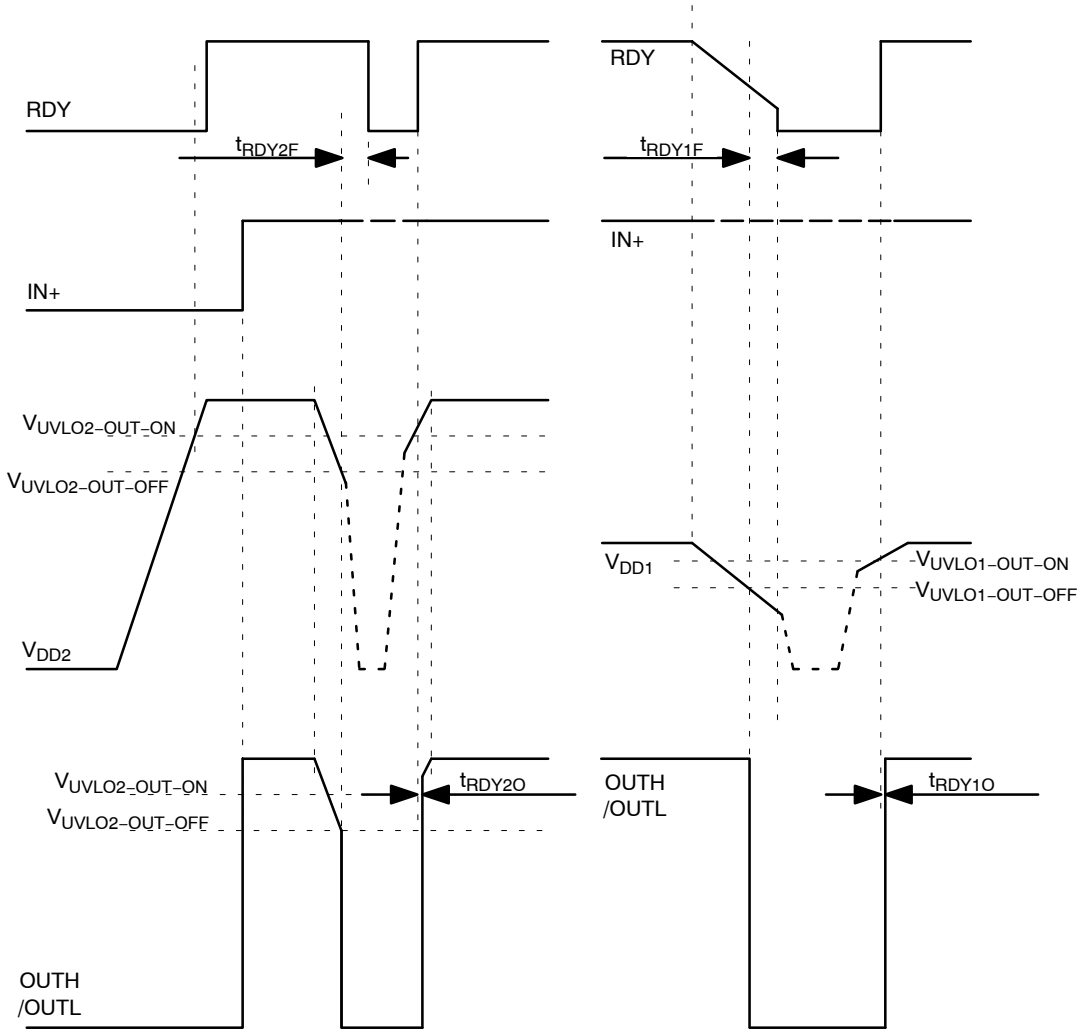

Figure 4. UVLO Waveform

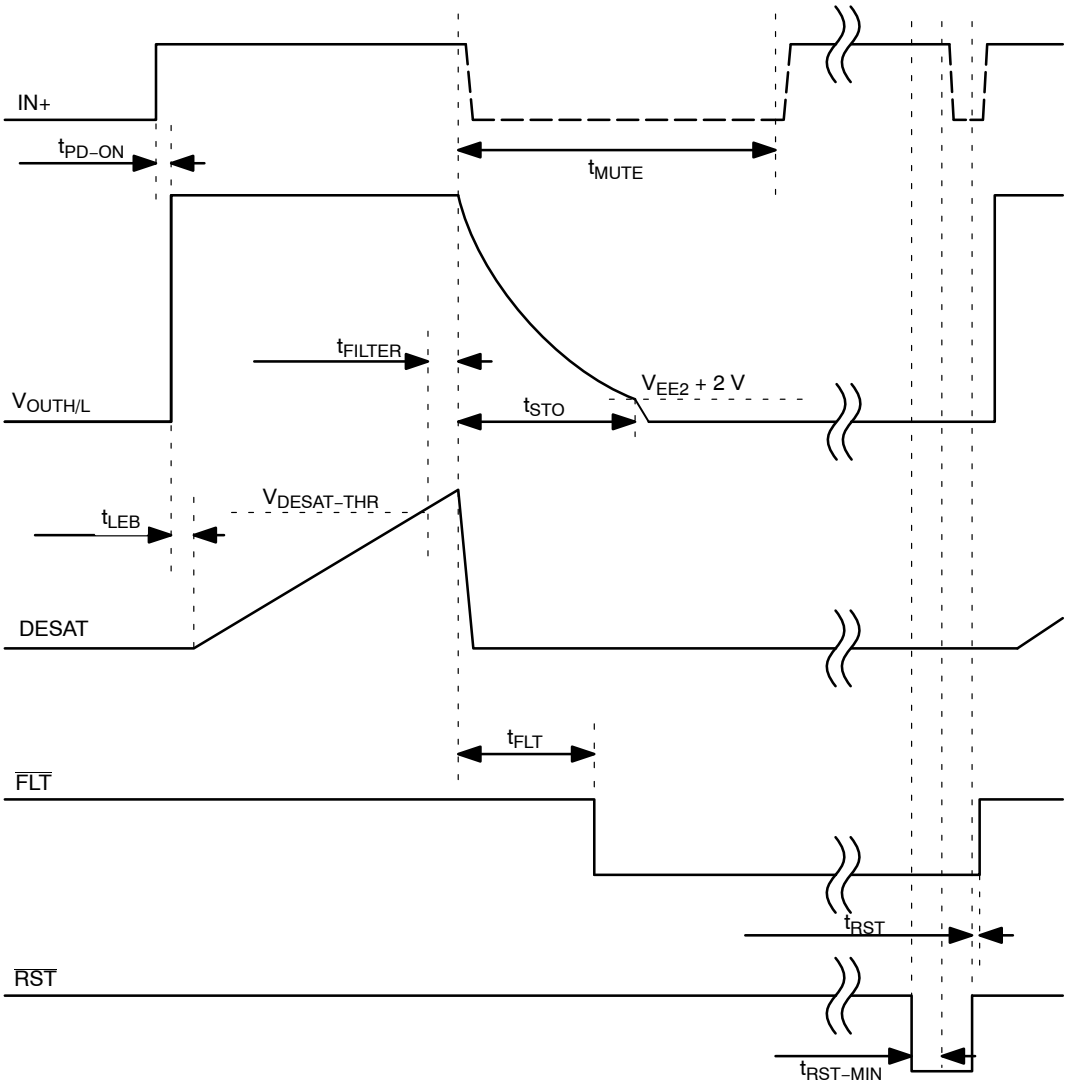

Figure 5. DESAT Response Waveform

TYPICAL CHARACTERISTICS

(Conditions for the following figures are the same as stated for ELECTRICAL CHARACTERISTICS Table unless otherwise noted. Typical and/or average values are used.)

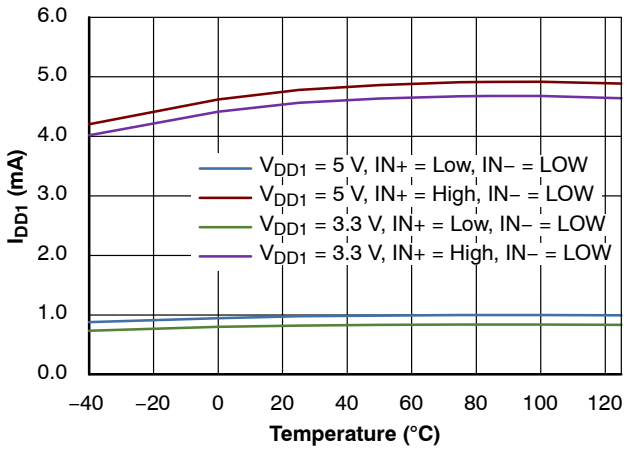

Figure 6. V_{DD1} Supply Current

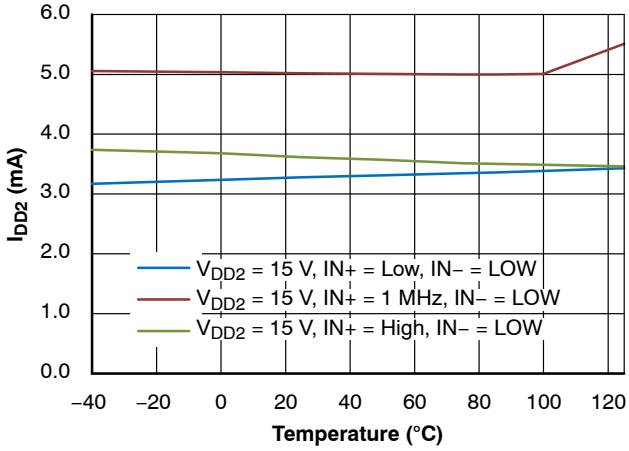

Figure 7. V_{DD2} Supply Current

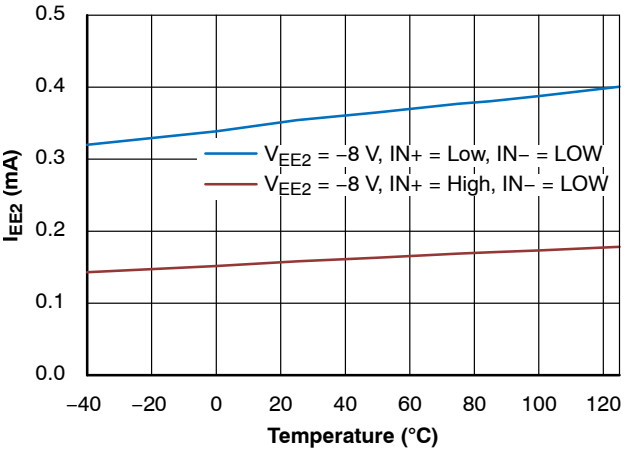

Figure 8. V_{EE2} Supply Current

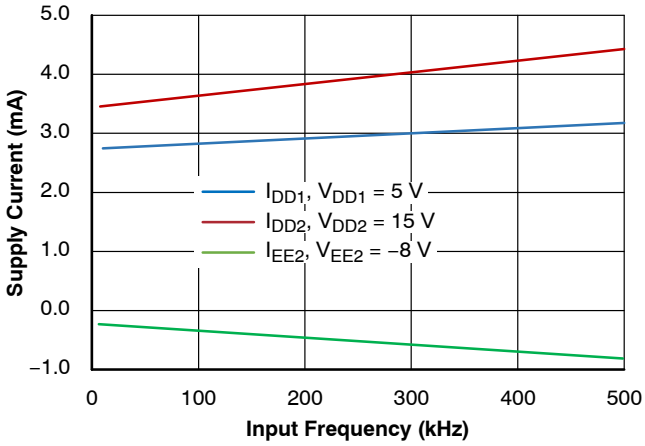

Figure 9. Supply Current vs Frequency

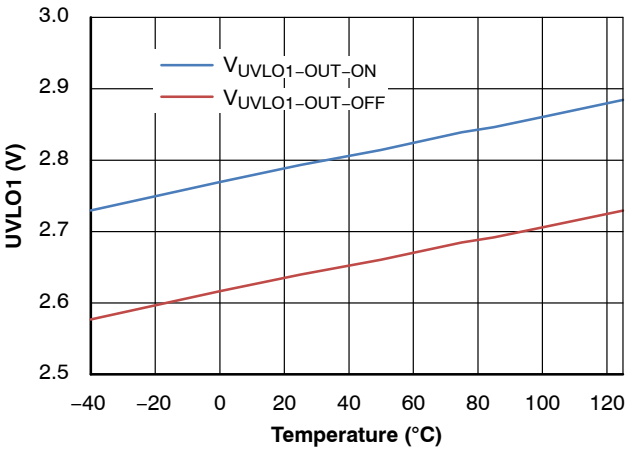

Figure 10. UVLO1 Threshold Voltage

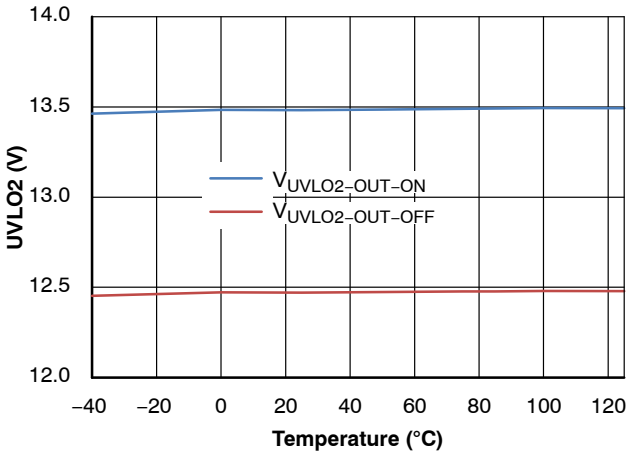

Figure 11. UVLO2 Threshold Voltage

TYPICAL CHARACTERISTICS

(Conditions for the following figures are the same as stated for ELECTRICAL CHARACTERISTICS Table unless otherwise noted. Typical and/or average values are used.) (continued)

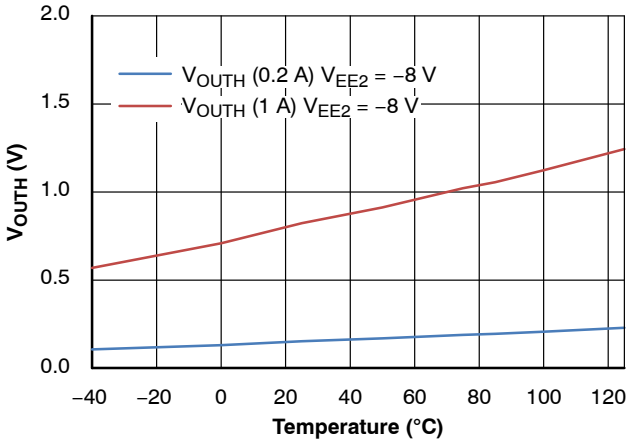

Figure 12. Output Voltage Drop, Sourcing

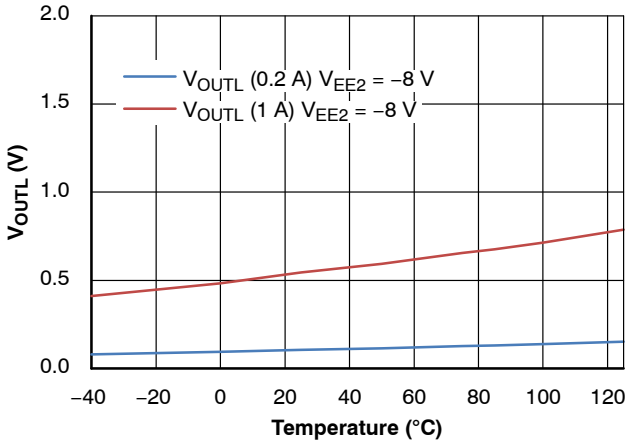

Figure 13. Output Voltage Drop, Sinking

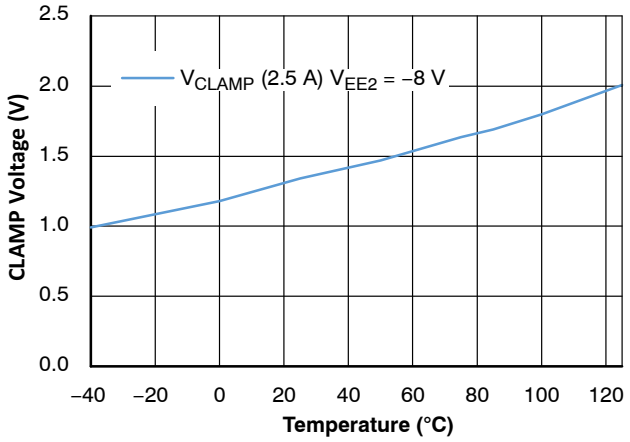

Figure 14. CLAMP Voltage Drop

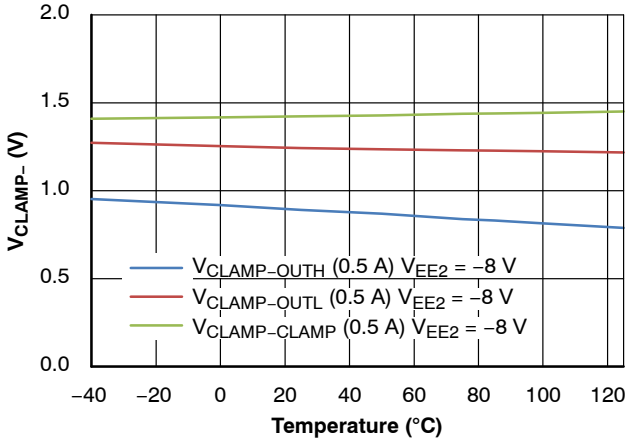

Figure 15. IGBT Short Circuit Clamp Voltage Drop

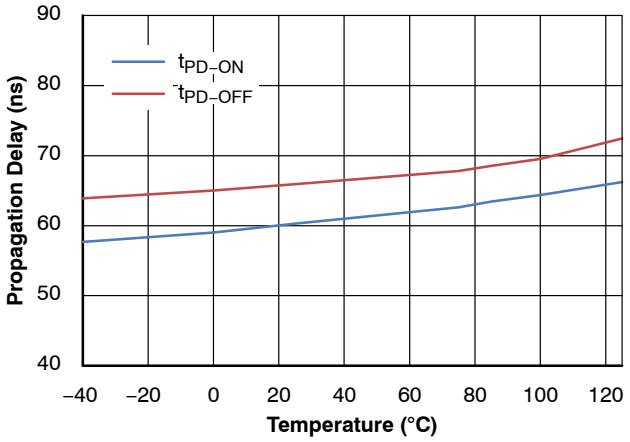

Figure 16. Propagation Delay

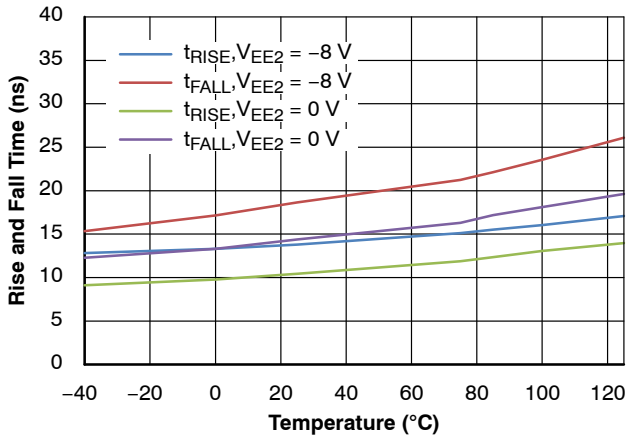

Figure 17. Rise and Fall Time

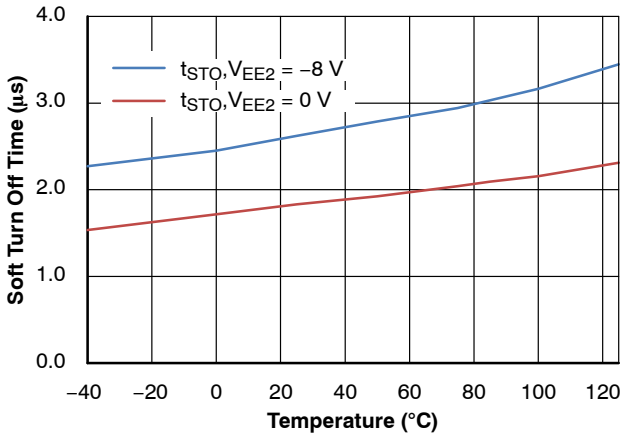

Figure 18. Soft Turn Off Time

FEATURE DESCRIPTIONS

Under Voltage Lockout (UVLO)

UVLO ensures correct switching of IGBT connected to the driver output.

- The IGBT is turned−off, if the supply V_{CC1} drops below $V_{UVLO1-OUT-OFF}$ and the RDY pin output goes to low.
- The driver output does not start to react to the input signal on V_{IN} until the V_{CC1} rises above the $V_{UVLO1-OUT-ON}$ again. If the supply V_{CC1} increase over $V_{UVLO1-OUT-ON}$, the RDY pin output goes to be open−drain and outputs continue to switch IGBT
- The IGBT is turned−off, if the supply V_{CC2} drops below $V_{UVLO2-OUT-OFF}$ and the RDY pin output goes to low.
- The driver output does not start to react to the input signal on V_{IN} until the V_{CC1} rises above the $V_{UVLO1-OUT-ON}$ again. If the supply V_{DD1} increases over $V_{UVLO1-OUT-ON}$, the RDY pin output goes to be open−drain and outputs continue to switch IGBT
- VEE2 is not monitored.

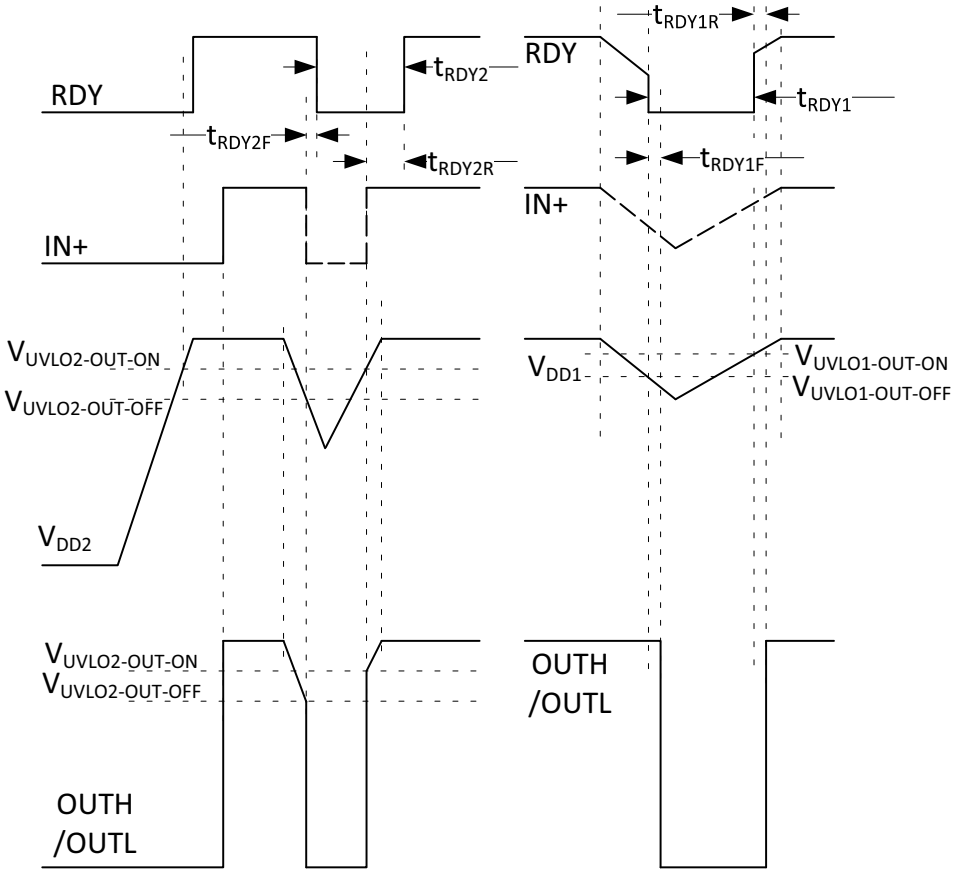

Figure 19. UVLO Diagram

Active Miller Clamp Protection (CLAMP)

NCV57000 supports both bipolar and unipolar power supply with active Miller clamp.

For operation with bipolar supplies, the IGBT is turned off with a negative voltage through OUTL with respect to its emitter. This prevents the IGBT from unintentionally turning on because of current induced from its collector to its gate due to Miller effect. In this condition it is not necessary to connect CLAMP output of the gate driver to the IGBT gate, but connecting CLAMP output to the IGBT gate is also not an issue. Typical values for bipolar operation are V_{DD2} = 15 V and V_{EE2} = −5 V with respect to GND_2.

For operation with unipolar supply, typically, V_{DD2} = 15 V with respect to GND_2, and V_{EE2} = GND_2. In this case, the IGBT can turn on due to additional charge from IGBT Miller capacitance caused by a high voltage slew rate transition on the IGBT collector. To prevent IGBT to turn on, the CLAMP pin is connected directly to IGBT gate and Miller current is sinked through a low impedance CLAMP transistor. When the IGBT is turned−off and the gate voltage transitions below V_{CLAMP}, the CLAMP current output is activated.

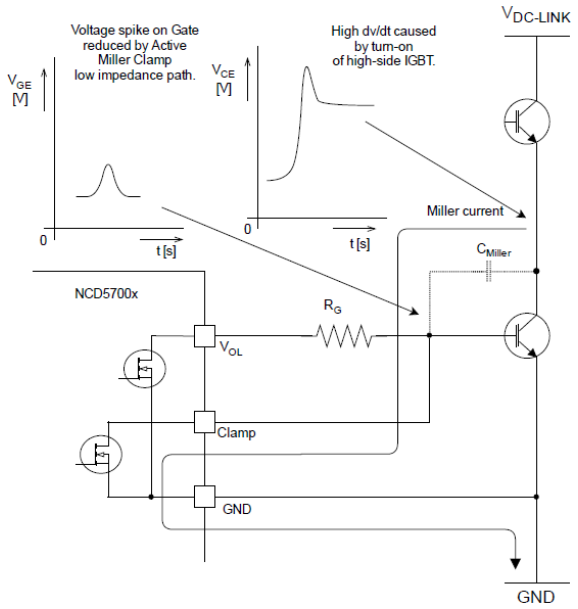

Figure 20. Current Path without Miler Clamp Protection

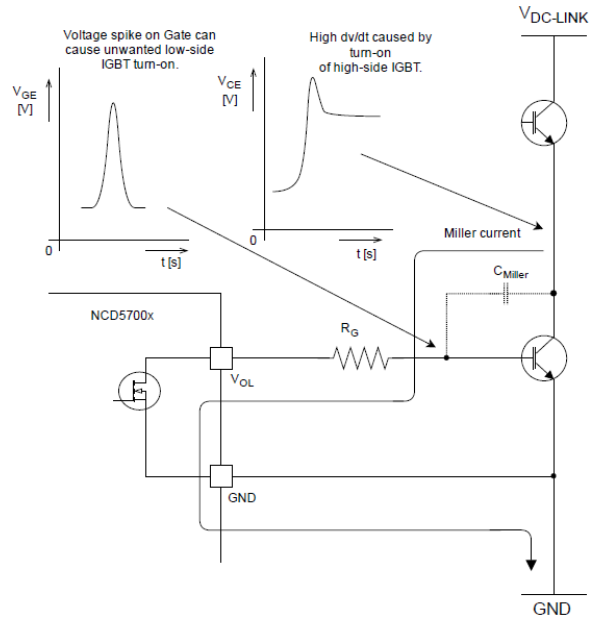

Figure 21. Current Path with Miler Clamp Protection

Non−inverting and Inverting Input Pin (IN+, IN−)

NCV57000 has two possible input modes to control IGBT. Both inputs have defined minimum input pulse width to filter occasional glitches.

- Non−inverting input IN+ controls the driver output while inverting input IN− is set to LOW
- Inverting input IN− controls the driver output while non−inverting input IN+ is set to HIGH

Warning: When the application use an independent or separate power supply for the control unit ant the input side of the driver, all inputs should be protected by a serial resistor (In case of a power failure of the driver, the driver may be damaged due to overloading of the input protection circuits)

Desaturation Protection (DESAT)

Desaturation protection ensures the protection of IGBT at short circuit. When the V_{CESAT} voltage goes up and reaches the set limit, the output is driven low and /FLT output is activated. Blanking time can be set by internal current source and an external capacitor. To avoid false DESAT triggering and minimize blanking time, fast switching diodes with low internal capacitance are recommended. All DESAT protective diodes internal capacitances builds voltage divider with the blanking capacitor.

Warning: Both external protective diodes are recommended for the protection against voltage spikes caused by IGBT transients passing through parasitic capacitances.

DESAT Circuit Parameters Specification

$$t_{BLANK} = C_{BLANK} \cdot \frac{V_{DESAT-THR}}{I_{DESAT-CHG}}$$

$$V_{DESAT-THR} > R_{S-DESAT} \cdot I_{DESAT-CHG} + V_{F\ HV\ diode} + V_{CESAT_IGBT}$$

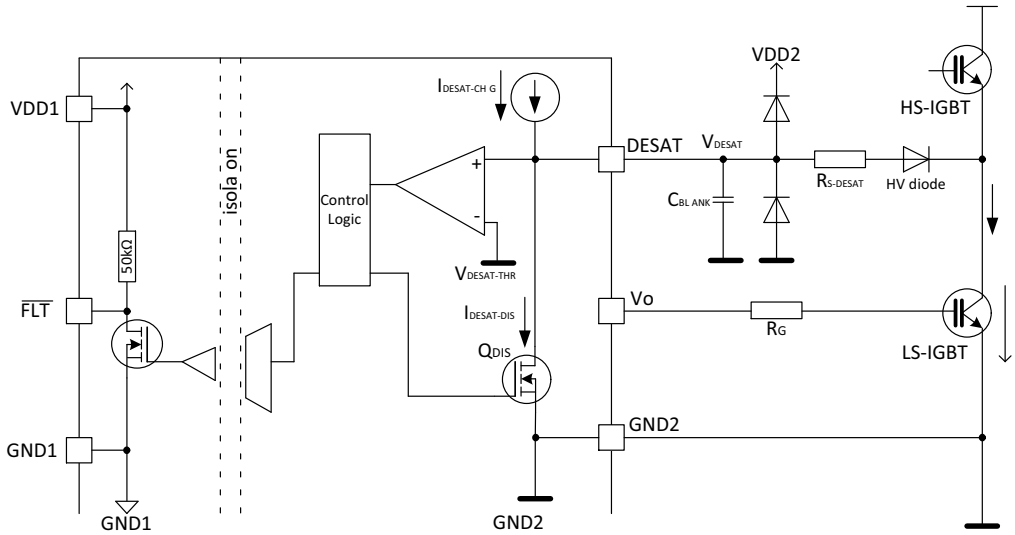

Figure 22. DESAT Protection Schematic

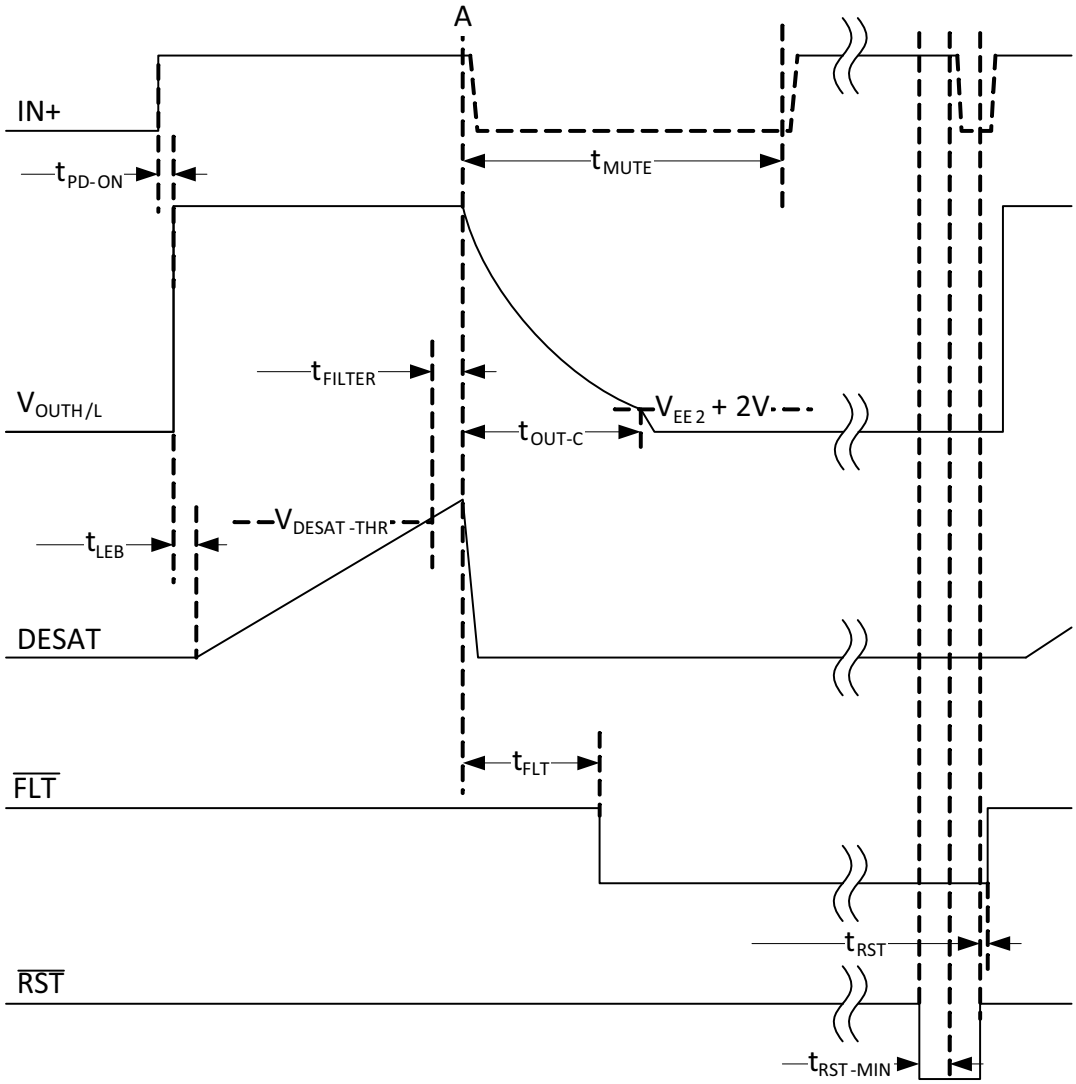

Figure 23. DESAT Switch Off Behavior

Fault Output Pin (FLT)

FLT open−drain output provides feedback to the controller about driver DESAT protection conditions. The open−drain FLT outputs of multiple NCV57000 devices can be wired together forming a single, common fault bus for interfacing directly to the microcontroller. FLT output has 50kΩ internal pull−up resistor to VDD1.

Ready Output Pin (RDY)

RDY open−drain output provides feedback to the controller about driver UVLO and TSD protections conditions.

- If either side of device have insufficient supply (VDD1 or VDD2), the RDY pin output goes low; otherwise, RDY pin output is open drain.
- If the temperature crosses the TSD threshold, the RDY pin output goes low; otherwise, RDY pin output is open drain.

The open−drain RDY outputs of multiple NCV57000 devices can be “OR”ed together.

Reset Input Pin (RST)

Reset input pin has internal pull−up resistor to VDD1. In normal condition the RST pin is connected to HIGH, to reset FAULT conditions connect RST pin to LOW. In applications that does not allow to control the reset, RST pin should be connected to IN+, the driver will be reset by each input pulse.

RESET Input

- FLT input is used to set back FLT output after DESAT conditions disappear

<u>Warning:</u> When the application use an independent or separate power supply for the control unit ant the input side of the driver, all inputs should be protected by a serial resistor (In case of a power failure of the driver, the driver may be damaged due to overloading of the input protection circuits)

Power Supply (VDD1, VDD2, VEE2)

NCV57000 is designed to support two different power supply configurations, bipolar or unipolar power supply. For reliable high output current the suitable external power capacitors required. Parallel combination of 100 nF + 4.7 μF ceramic capacitors is optimal for a wide range of applications using IGBT. For reliable driving IGBT modules (containing several parallel IGBT’s) is a higher capacity required (typically 100 nF + 10 μF). Capacitors should be as close as possible to the driver’s power pins.

- In bipolar power supply the driver is typically supplied with a positive voltage of 15 V at VDD2 and negative voltage −5 V at VEE2 (Figure 24). Negative power supply prevents a dynamic turn on throughout the internal IGBT input capacitance.
- In Unipolar power supply the driver is typically supplied with a positive voltage of 15 V at VDD2. Dynamic turn on throughout the internal IGBT input capacitance could be prevented by Active Miler Clamp function. CLAMP output should be directly connected to IGBT gate (Figure 25).

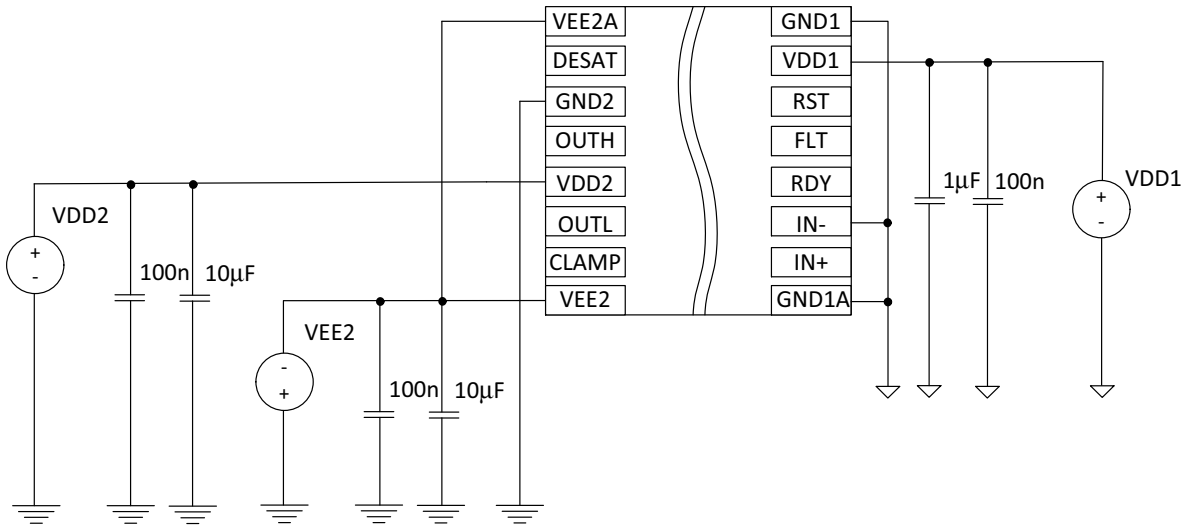

Figure 24. Bipolar Power Supply

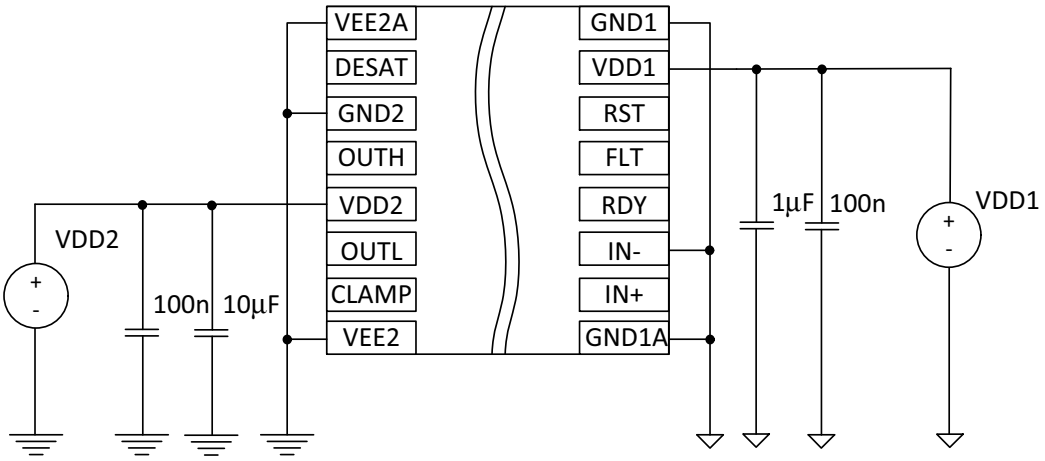

Figure 25. Unipolar Power Supply

Common Mode Transient Immunity (CMTI)

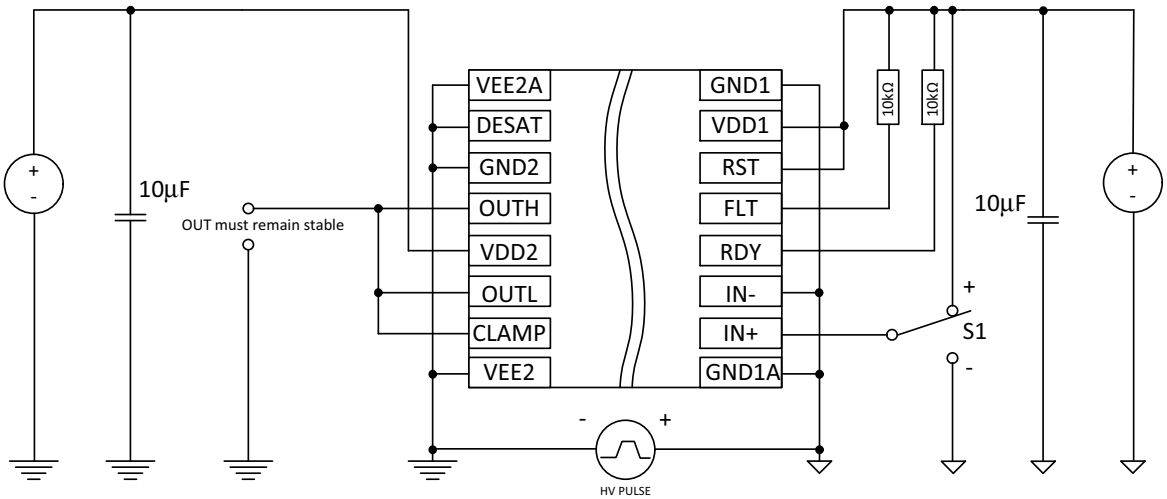

Figure 26. Common−Mode Transient Immunity Test Circuit

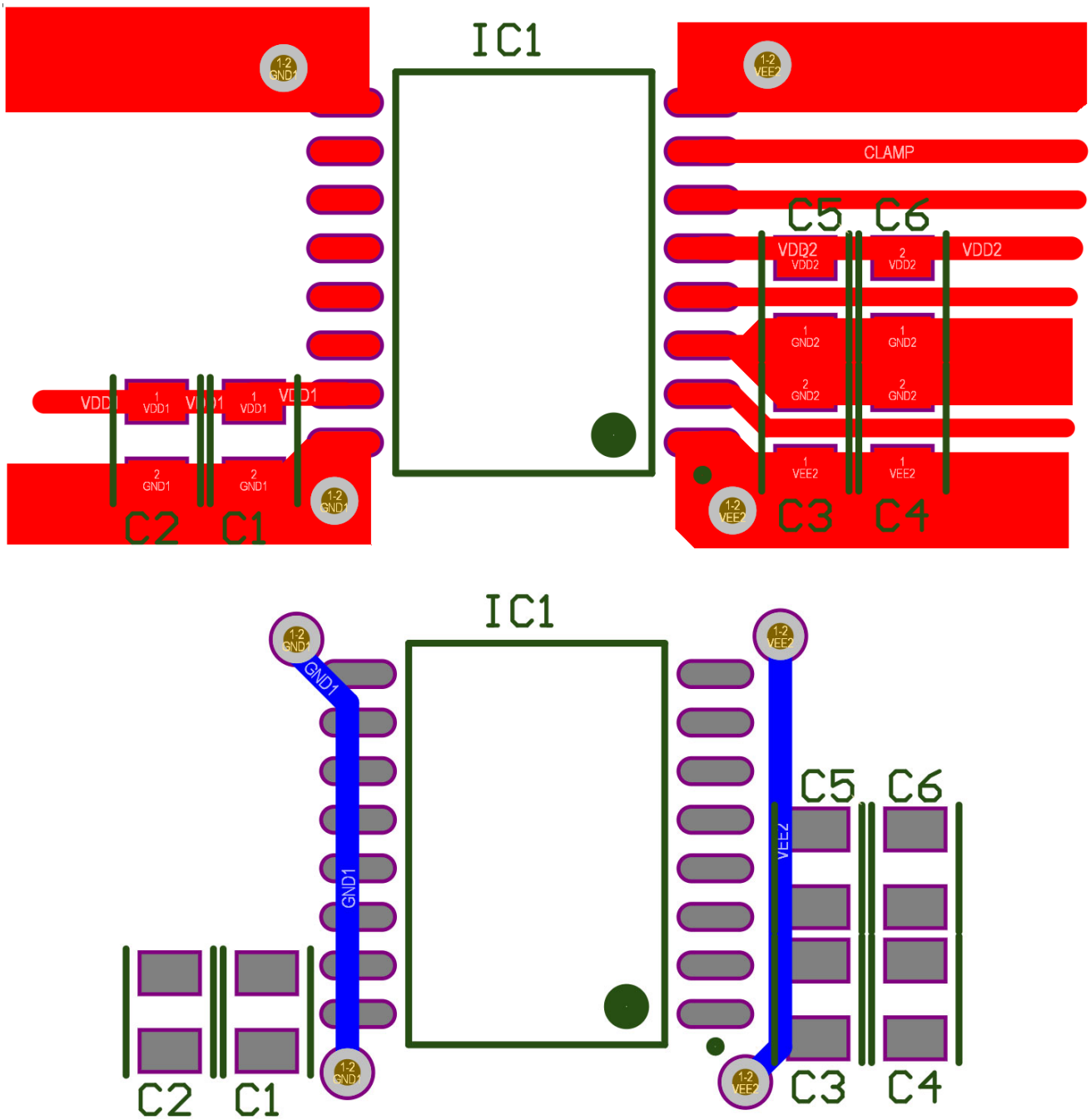

Figure 27. Recommended Basic Bipolar Power Supply PCB Design

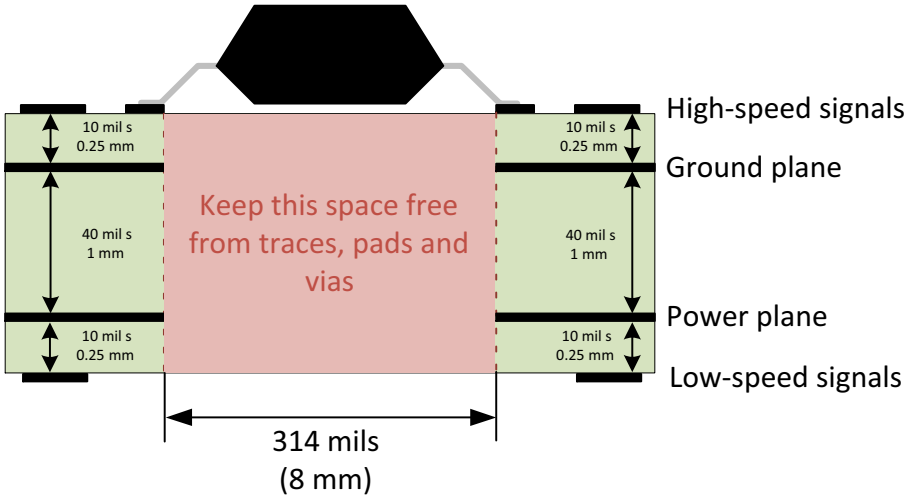

Figure 28. Recommended Layer Stack

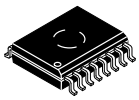

1
SCALE 1:1

SOIC−16 WB
CASE 751G
ISSUE E

DATE 08 OCT 2021

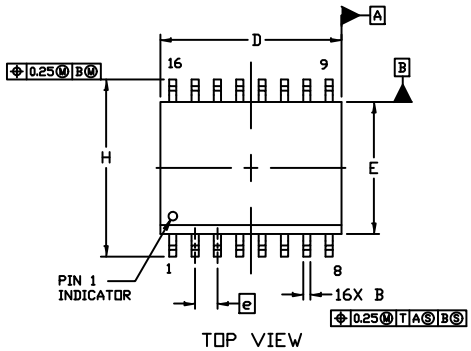

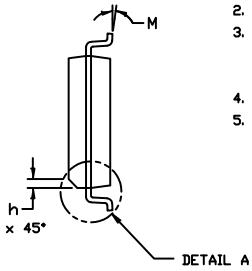

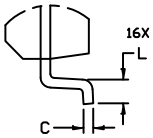

DETAIL A
2X SCALE

NOTES:
1. DIMENSIONING AND TOLERANCING PER ASME Y14.5M, 1994.
2. CONTROLLING DIMENSION: MILLIMETERS
3. DIMENSION b DOES NOT INCLUDE DAMBAR PROTRUSION. ALLOWABLE PROTRUSION SHALL BE 0.13 TOTAL IN EXCESS OF B DIMENSION AT MAXIMUM MATERIAL CONDITION.
4. DIMENSIONS D AND E DO NOT INCLUDE MOLD PROTRUSIONS.
5. MAXIMUM MOLD PROTRUSION OR FLASH TO BE 0.15 PER SIDE.

	MILLIMETERS	
DIM	MIN.	MAX.
A	2.35	2.65
A1	0.10	0.25
B	0.35	0.49
C	0.23	0.32
D	10.15	10.45
E	7.40	7.60
e	1.27 BSC	
H	10.05	10.55
h	0.53 REF	
L	0.50	0.90
M	0°	7°

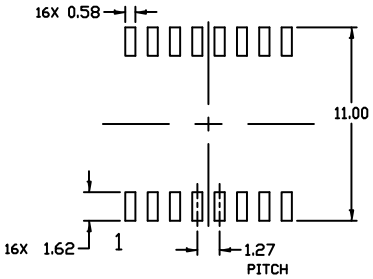

RECOMMENDED
MOUNTING FOOTPRINT

GENERIC
MARKING DIAGRAM*

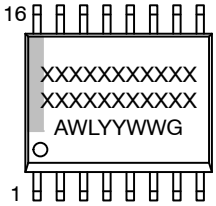

XXXXX = Specific Device Code
A = Assembly Location
WL = Wafer Lot
YY = Year
WW = Work Week
G = Pb−Free Package

*This information is generic. Please refer to device data sheet for actual part marking. Pb−Free indicator, “G” or microdot “▪”, may or may not be present. Some products may not follow the Generic Marking.

DOCUMENT NUMBER:	98ASB42567B	Electronic versions are uncontrolled except when accessed directly from the Document Repository. Printed versions are uncontrolled except when stamped “CONTROLLED COPY” in red.
DESCRIPTION:	SOIC−16 WB	PAGE 1 OF 1

onsemi and onsemi are trademarks of Semiconductor Components Industries, LLC dba **onsemi** or its subsidiaries in the United States and/or other countries. **onsemi** reserves the right to make changes without further notice to any products herein. **onsemi** makes no warranty, representation or guarantee regarding the suitability of its products for any particular purpose, nor does **onsemi** assume any liability arising out of the application or use of any product or circuit, and specifically disclaims any and all liability, including without limitation special, consequential or incidental damages. **onsemi** does not convey any license under its patent rights nor the rights of others.

onsemi, onsemi, and other names, marks, and brands are registered and/or common law trademarks of Semiconductor Components Industries, LLC dba "**onsemi**" or its affiliates and/or subsidiaries in the United States and/or other countries. **onsemi** owns the rights to a number of patents, trademarks, copyrights, trade secrets, and other intellectual property. A listing of **onsemi**'s product/patent coverage may be accessed at www.onsemi.com/site/pdf/Patent−Marking.pdf. **onsemi** reserves the right to make changes at any time to any products or information herein, without notice. The information herein is provided "as−is" and **onsemi** makes no warranty, representation or guarantee regarding the accuracy of the information, product features, availability, functionality, or suitability of its products for any particular purpose, nor does **onsemi** assume any liability arising out of the application or use of any product or circuit, and specifically disclaims any and all liability, including without limitation special, consequential or incidental damages. Buyer is responsible for its products and applications using **onsemi** products, including compliance with all laws, regulations and safety requirements or standards, regardless of any support or applications information provided by **onsemi**. "Typical" parameters which may be provided in **onsemi** data sheets and/or specifications can and do vary in different applications and actual performance may vary over time. All operating parameters, including "Typicals" must be validated for each customer application by customer's technical experts. **onsemi** does not convey any license under any of its intellectual property rights nor the rights of others. **onsemi** products are not designed, intended, or authorized for use as a critical component in life support systems or any FDA Class 3 medical devices or medical devices with a same or similar classification in a foreign jurisdiction or any devices intended for implantation in the human body. Should Buyer purchase or use **onsemi** products for any such unintended or unauthorized application, Buyer shall indemnify and hold **onsemi** and its officers, employees, subsidiaries, affiliates, and distributors harmless against all claims, costs, damages, and expenses, and reasonable attorney fees arising out of, directly or indirectly, any claim of personal injury or death associated with such unintended or unauthorized use, even if such claim alleges that **onsemi** was negligent regarding the design or manufacture of the part. **onsemi** is an Equal Opportunity/Affirmative Action Employer. This literature is subject to all applicable copyright laws and is not for resale in any manner.

ADDITIONAL INFORMATION

TECHNICAL PUBLICATIONS:
Technical Library: www.onsemi.com/design/resources/technical−documentation
onsemi Website: www.onsemi.com

ONLINE SUPPORT: www.onsemi.com/support
For additional information, please contact your local Sales Representative at
www.onsemi.com/support/sales