NCN5150NGEVB

NCN5150 Evaluation Board User's Manual

ON Semiconductor®

http://onsemi.com

EVAL BOARD USER'S MANUAL

Introduction

The NCN5150SOICGEVB and NCN5150QFNGEVB evaluation boards demonstrate the NCN5150 M-BUS transceiver in SOIC and QFN package respectively. These evaluation boards include all external components needed for operating NCN5150 and demonstrate the small PCB surface area such an implementation requires.

Overview

The NCN5150 is a single-chip integrated slave transceiver for use in two-wire Meter Bus (M-BUS) slave devices and repeaters. The transceiver provides all of the functions needed to satisfy the European Standards EN 13757−2 and EN 1434−3 describing the physical layer requirements for M-BUS. It includes a programmable power level of up to 2 (SOIC version) or 6 (NQFP version) unit loads, which are available for use in external circuits through a 3.3 V LDO regulator. The NCN5150 can provide communication up to the maximum M-BUS communication speed of 38,400 baud (half-duplex).

Applications

Multi-energy Utility Meters

- Water
- Gas
- Electricity
- Heating Systems

Features

- Single-chip MBUS Transceiver
- UART Communication Speeds Up to 38,400 baud
- Integrated 3.3 V VDD LDO Regulator with Extended Peak Current
- Capability of 15 mA
- Supports Powering Slave Device from the Bus or from External Power Supply
- Adjustable I/O Levels
- Adjustable Constant Current Sink up to 2 or 6 Unit Loads Depending on the Package
- Low Bus Voltage Operation
- Extended Current Budget for External Circuits: minimum 0.8 mA
- Polarity Independent
- Power-Fail Function
- Fast Startup − No External Transistor Required on STC Pin
- Industrial Ambient Temperature Range of −40°C to +85°C
- Available in:
  - 16-pin SOIC (Pin-to-Pin Compatible with TSS721A)
  - 20-pin QFN
- These are Pb-free Devices

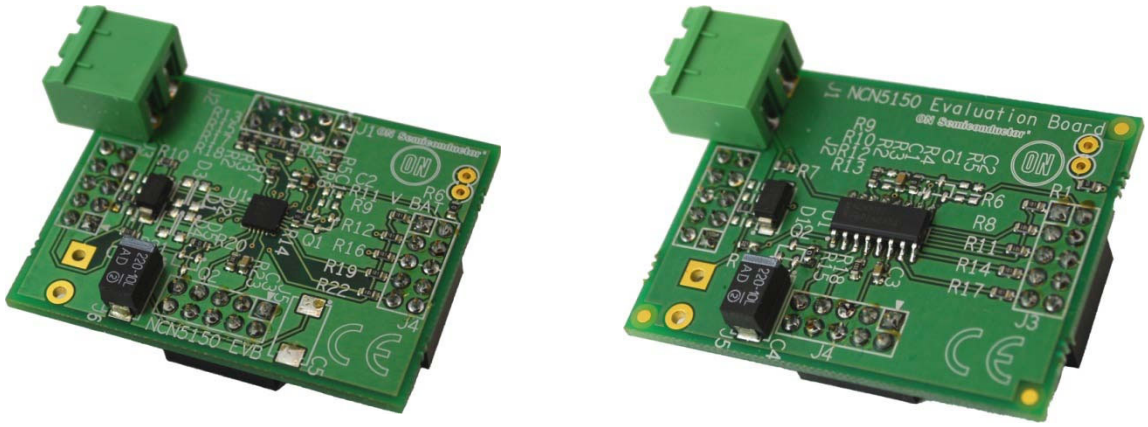

Figure 1. The NCN5150NGEVB Evaluation Boards

© Semiconductor Components Industries, LLC, 2013

March, 2013 − Rev. 0

Publication Order Number:
EVBUM2178/D

ELECTRICAL CHARACTERISTICS

Table 1. ELECTRICAL CHARACTERISTICS OF THE NCN5150SOICGEVB AND NCN5150QFNGEVB BOARD

Symbol	Parameter / Condition	Value			Unit
		Min	Typ	Max	
Bus Voltage					
V_{BUS}	Bus Voltage	12	36	42	V
Current Drawn from the Bus					
I_{BUS}	1 UL		1.3	1.5	mA
Output Voltage					
V_{DD}	LDO output	3.1	3.3	3.6	V

NCN5150 DESCRIPTION

The NCN5150 provide a complete transceiver for the Metering Bus (M-BUS). It consists of a transmit block which will translate the logic level uart input to current level signaling on the bus, and a receive block which will translate the voltage-level signaling on the bus to a logic-level uart output. The device includes an echo function which will echo the uart input on the uart output, provided the device is powered. This can be used by the software stack to monitor if the message was transmitted. The high voltage level of the microcontroller interface can be changed by connecting the desired voltage to the VIO pin. By default, this pin is connected through a 0R resistor to 3.3 V on the evaluation boards.

A constant current regulator that will draw a fixed current from the bus, expressed in unit loads (UL). This current is made available to the application through a low-dropout 3.3 V regulator. The NCN5150 will detect when the bus is disconnected and provide an early warning to the microcontroller that the 3.3 V supply is about to collapse through the PFb pin.

A thermal shutdown protects the device against high junction temperatures.

NCN5150SOICGEVB DESCRIPTION

General Overview

The NCN5192NGEVB evaluation board demonstrates the external components required for the operation of the IC. We will cover the different sections below as well as possible alternatives. A drawing of the board where the different sections are indicated is shown below.

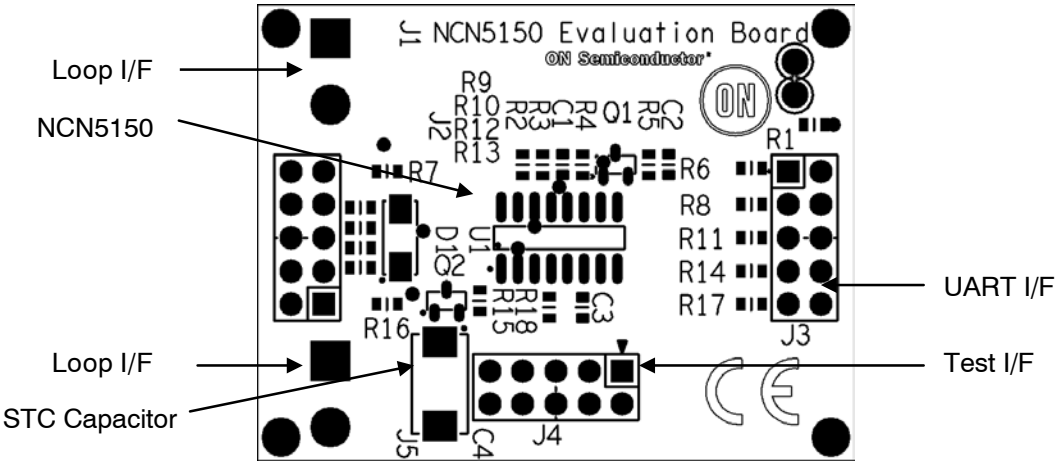

Figure 2. Board Drawing with Indication of Different Sections

BOM List

Table 2. NCN5150SOICGEVB BILL OF MATERIALS

Quantity	Reference	Part	Footprint	Comments	Manufacturer	Product Code
1	C1	1u	C0603	6V3	Multicomp	MCCA000515
1	C2	DNP	C0603	DNP	–	–
5	R3, R5, R9, R12, R13	DNP	R0603	DNP	–	–
1	C3	100n	C0603	50 V	Multicomp	MCCA000256
1	C4	220u	Case E	10 V	AVX	TAJD227K010RNJ
1	D1	1SMA40CAT3G	SMA		ON Semiconductor	1SMA40CAT3G
2	J1,J5	CON2		DNP	IMO Precision	21.95MH/2
3	J2,J3,J4	CON10A		DNP	Multicomp	2214S−10SG−85
2	Q1,Q2	DNP	SOT−23	DNP	–	–
4	R1, R4, R10, R15	0R	R0603	62.5 mW	Multicomp	MC0603WG00000T5E−TR
6	R2, R6, R8, R11, R14, R17	100R	R0603	62.5 mW	Multicomp	MC0.063W06031%100RFR
2	R7, R16	220R	R0603	62.5 mW	Multicomp	MC0.063W06031%220RFR
1	R18	30K	R0603	62.5 mW	Multicomp	MC0.063W06031%30KFR
1	TP1	GND		DNP	–	–
1	TP2	3V3		DNP	–	–
1	U1	NCN5150	SOIC16	DNP	ON Semiconductor	NCN5150DR2G

Schematic Diagram

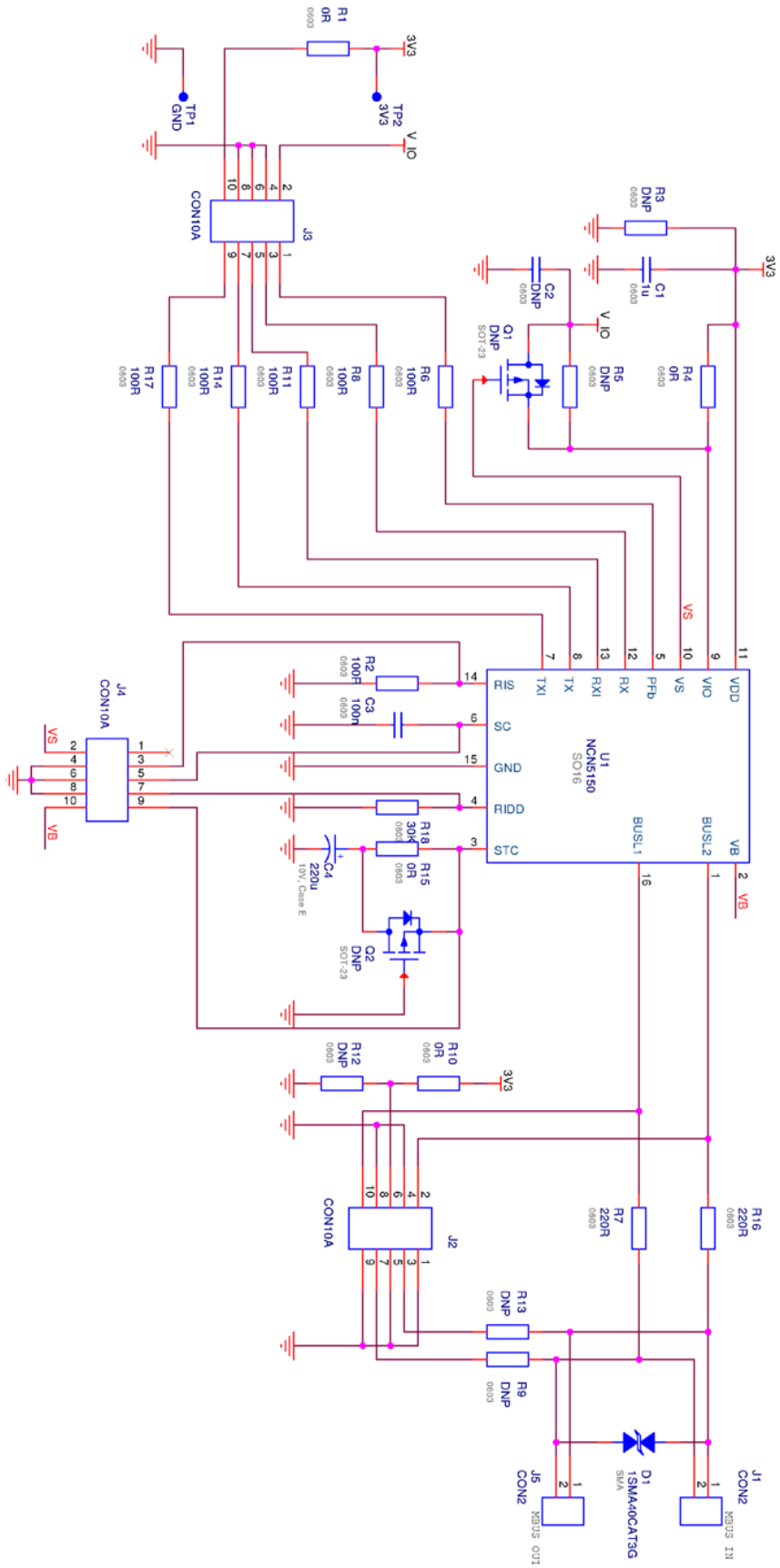

Figure 3. Schematic of NCN5150SOICGEVB

NCN5150QFNGEVB DESCRIPTION

General Overview

The NCN5150QFNGEVB evaluation board demonstrates the external components required for the operation of the IC. We will cover the different sections below as well as possible alternatives. A drawing of the board where the different sections are indicated is shown below.

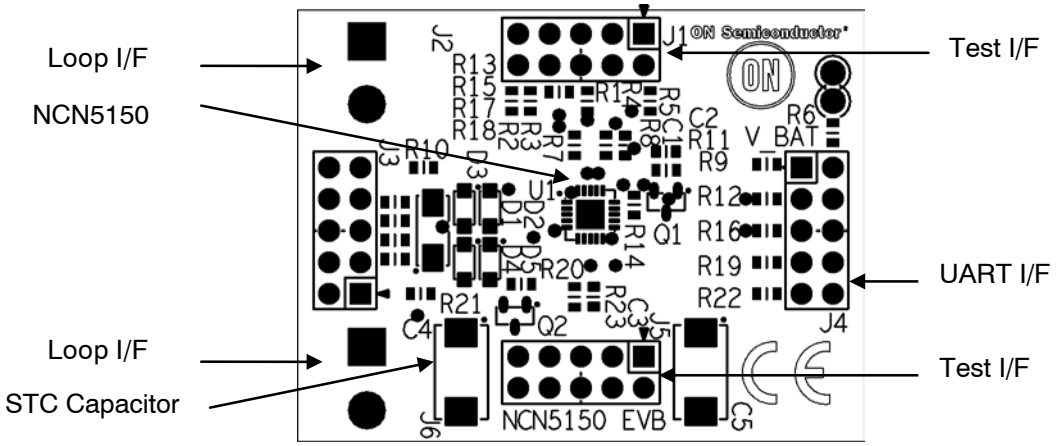

Figure 4. Board Drawing with Indication of Different Sections

BOM List

Table 3. NCN5150QFNGEVB BILL OF MATERIALS

Quantity	Reference	Part	Footprint	Comments	Manufacturer	Product Code
1	C1	1u	C0603	6.3 V	Multicomp	MCCA000515
1	C2	DNP	C0603	DNP	–	–
1	C3	100n	C0603	50 V	Multicomp	MCCA000256
1	C4	220u	Case E	10 V	AVX	TAJD227K010RNJ
1	C5	DNP	Case E	DNP	–	–
4	D1, D2, D4, D5	DNP	SOD−123	DNP	–	–
1	D3	1SMA40CAT3G	SMA		ON Semiconductor	1SMA40CAT3G
4	J1, J3, J4, J5	CON10A		DNP	IMO Precision	21.95MH/2
2	J2, J6	CON2		DNP	Multicomp	2214S−10SG−85
2	Q1, Q2	DNP	SOT−23	DNP	–	–
10	R1,R2,R3,R4,R5, R8,R11,R13,R15, R18	DNP		DNP	–	–
6	R7,R9,R12,R16, R19,R22	100R	R0603	62.5 mW	Multicomp	MC0.063W06031%100RFR
4	R6,R14,R17,R20	0R	R0603	62.5 mW	Multicomp	MC0603WG00000T5E−TR
2	R10, R21	220R	R0603	62.5 mW	Multicomp	MC0.063W06031%220RFR
1	R23	30K	R0603	62.5 mW	Multicomp	MC0.063W06031%30KFR
1	TP1	GND		DNP	–	–
1	TP2	3V3		DNP	–	–
1	U1	NCN5150	QFN20	ON Sample	ON Semiconductor	NCN5150MNTWG

Schematic Diagram

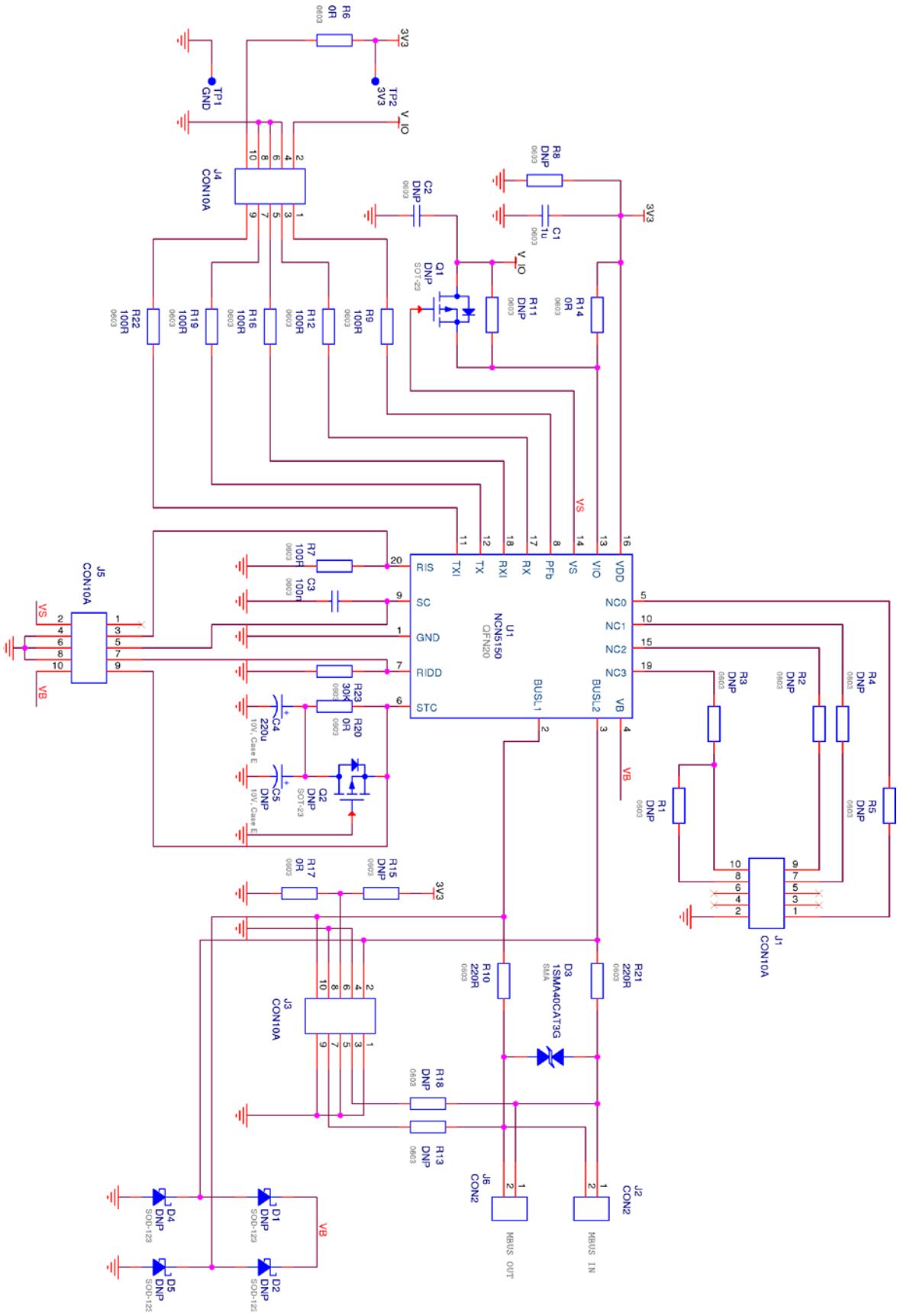

Figure 5. Schematic of NCN5150QFNGEVB

FUNCTIONAL DESCRIPTION

Power Supply

The NCN5150 provides power to be used in the application. To do this, the NCN5150 draws a fixed current from the bus. The amount of current drawn is fixed at a number of unit loads (intervals of 1.5 mA) and can be set by changing the value of the RIDD resistor. The SOIC version can support up to 2 UL, while the QFN version can support up to 6 UL. The required resistors for are shown in table xx.

Also shown in table xx is the maximum amount of capacitance allowed on the STC pin. This limit will ensure that the transceiver will start up in less than 3 s as required by the M-BUS standard. Using a smaller capacitor on STC is allowed, and will result in faster start-up, but also in a faster shutdown, reducing the time between the early warning PFb toggling (when the bus is removed) and the point where the 3.3V VDD voltage can no longer be maintained. The minimum allowed capacitance on STC is 10 times the capacitance on the VDD pin. The minimum required capacitance on the VDD pin is 1 μF.

Table 4. UL, RIDD VALUES, STC CAPACITANCE

Number of Unit Loads	RIDD Value	Maximum STC Capacitor Value	Min. Available Current
1	30 kΩ	330 μF	0.88 mA
2	13 kΩ	820 μF	2.10 mA
3	8.45 kΩ	1200 μF	3.10 mA
4	6.19 kΩ	1500 μF	4.20 mA
5	4.87 kΩ	2200 μF	5.30 mA
6	4.02 kΩ	2700 μF	6.50 mA

Shown in Figure 6 is the startup sequence of the device. Note that the NCN5150 does not require any external (PMOS) transistor on the STC pin for proper startup. The yellow waveform is the bus voltage, the purple waveform the STC voltage, the green waveform the VDD output, and the blue waveform the TX output.

Figure 6. NCN5150 Startup Sequence

Shown in Figure 7 is the shutdown sequence of the device. The green waveform is the bus voltage, the blue waveform is the VDD output, the purple waveform is the PFb output, and the yellow waveform is the TX output.

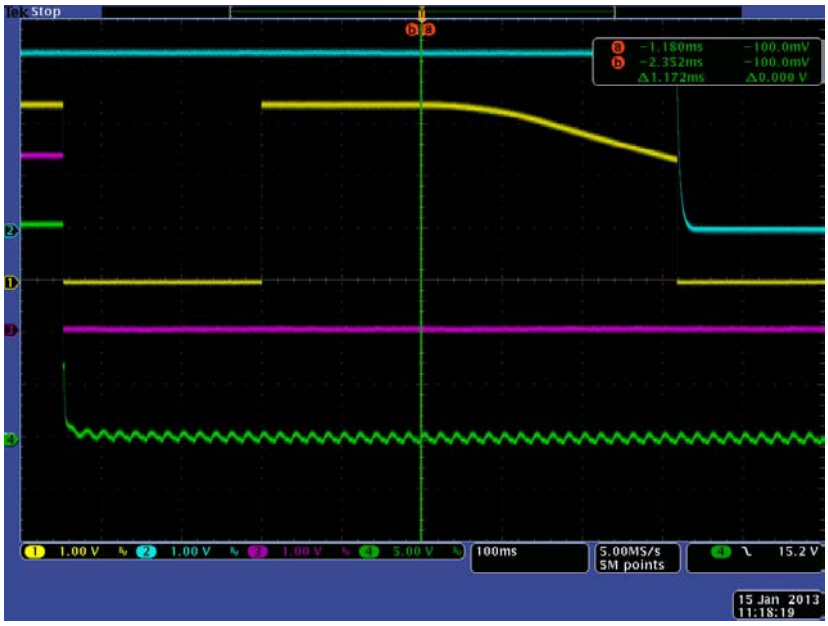

Figure 7. NCN5150 Shutdown Sequence

UART Interface IDC1

The interface between the transceiver and an external microcontroller is a standard uart interface consisting of the TX and RX. Alternatively, inverted signals, TXI and RXI, which are active high, are also available. Only one signal from TX and TXI, or from RX and RXI can be used at the same time. The uart pins can handle communication up to 38400 baud. The M-BUS standard requires communication with 1 start bit, 8 data-bits, 1 even parity bit and 1 stop bit.

Also available on the same connector is the VIO connection, PFb indication and 3V3 VDD output.

Table 5. MICROCONTROLLER INTERFACE

Pin number	Signal	Type	Description
1	PFb	Output	Bus failure indication
2	VIO	Power	IO voltage level
3	RX	Input	UART input
5	RXI	Input	UART input, inverted
7	TX	Output	UART output
9	TXI	Output	UART output, Inverted
4, 6, 8	GND	Power	Ground
10	VDD	Power	3V3 Output

Transmitter

The M-Bus transmitter translated the RX or RXI voltage levels to current levels on the bus. Typically, 15 mA is added when transmitting a space.

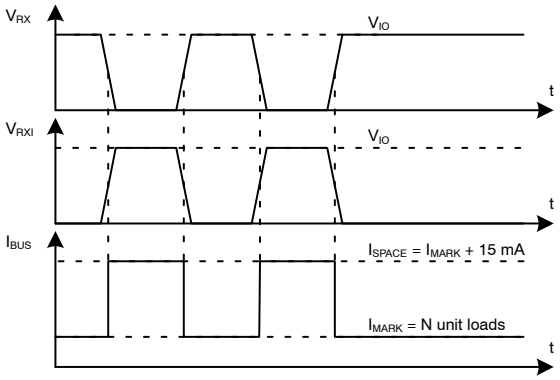

Figure 8. Output Waveforms

Receiver

The receiver will compare the bus voltage level with the mark level stored on the SC capacitor minus the threshold level (typically 6 V). It will translate these voltage levels to low voltage communication on the TX and TXI pins. The high voltage of these pins is determined by the VIO voltage.

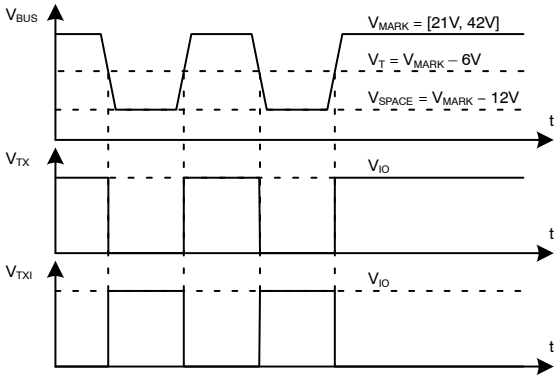

Figure 9. Receive Waveforms

APPENDIX

Evaluation Board Layout

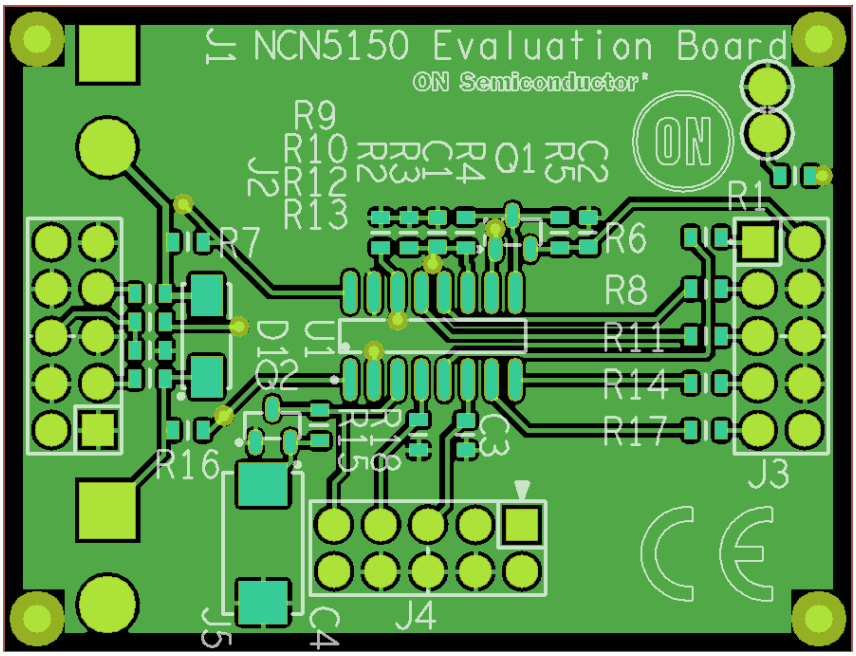

Figure 10. Top Layer Layout (SOIC)

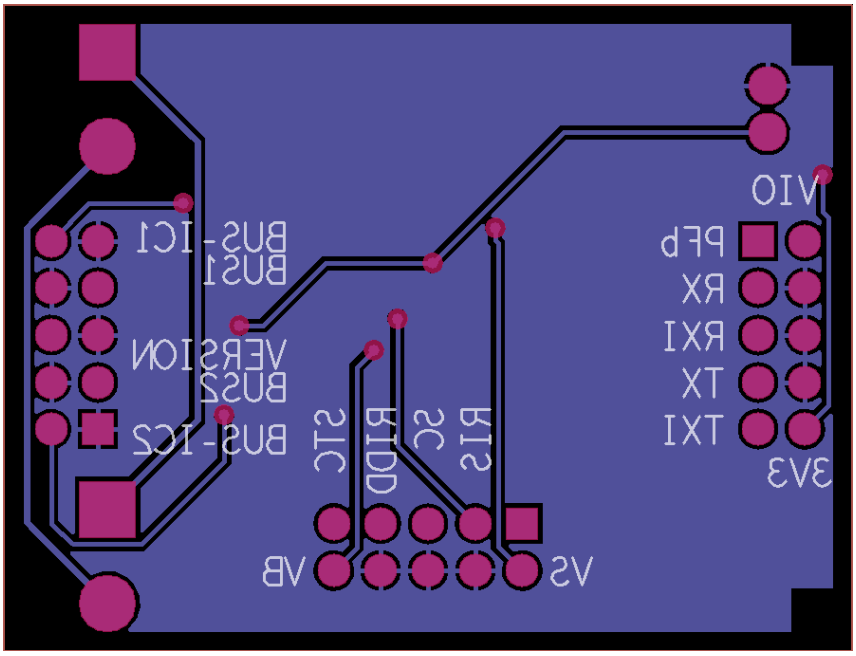

Figure 11. Bottom Layer Layout (SOIC)

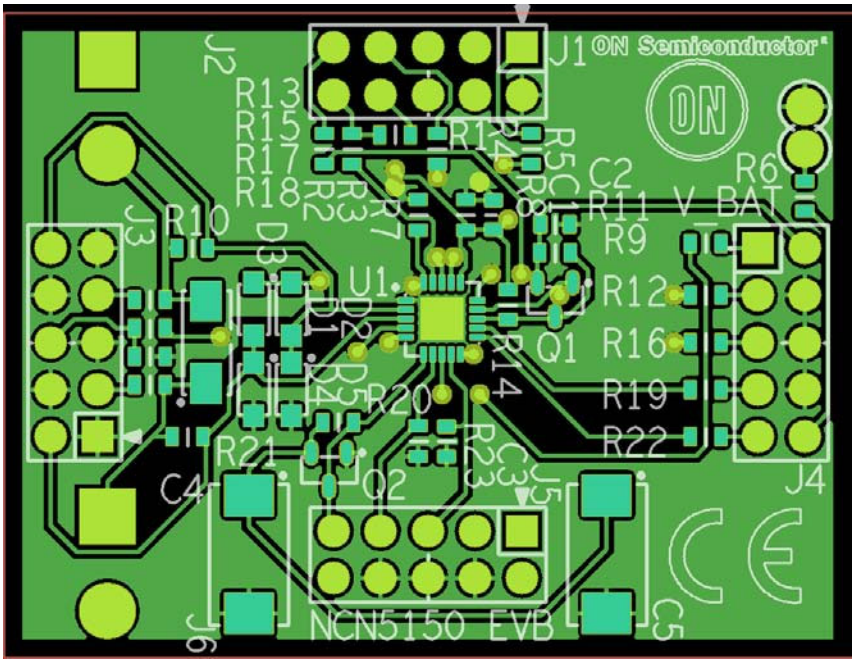

Figure 12. Top Layer Layout (QFN)

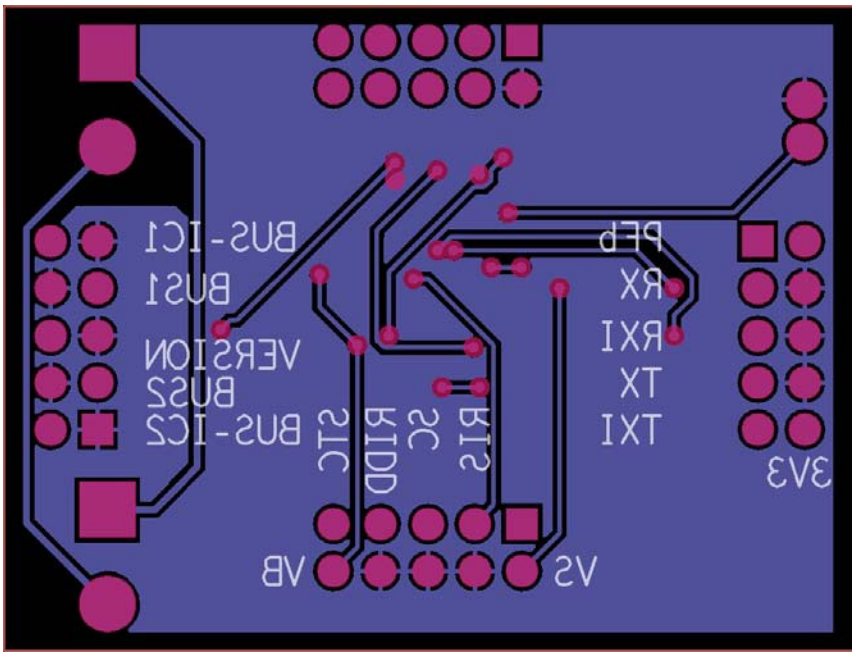

Figure 13. Bottom Layer Layout (QFN)

onsemi, onsemi, and other names, marks, and brands are registered and/or common law trademarks of Semiconductor Components Industries, LLC dba "**onsemi**" or its affiliates and/or subsidiaries in the United States and/or other countries. **onsemi** owns the rights to a number of patents, trademarks, copyrights, trade secrets, and other intellectual property. A listing of **onsemi**'s product/patent coverage may be accessed at www.onsemi.com/site/pdf/Patent−Marking.pdf. **onsemi** is an Equal Opportunity/Affirmative Action Employer. This literature is subject to all applicable copyright laws and is not for resale in any manner.

The evaluation board/kit (research and development board/kit) (hereinafter the "board") is not a finished product and is not available for sale to consumers. The board is only intended for research, development, demonstration and evaluation purposes and will only be used in laboratory/development areas by persons with an engineering/technical training and familiar with the risks associated with handling electrical/mechanical components, systems and subsystems. This person assumes full responsibility/liability for proper and safe handling. Any other use, resale or redistribution for any other purpose is strictly prohibited.

THE BOARD IS PROVIDED BY ONSEMI TO YOU "AS IS" AND WITHOUT ANY REPRESENTATIONS OR WARRANTIES WHATSOEVER. WITHOUT LIMITING THE FOREGOING, ONSEMI (AND ITS LICENSORS/SUPPLIERS) HEREBY DISCLAIMS ANY AND ALL REPRESENTATIONS AND WARRANTIES IN RELATION TO THE BOARD, ANY MODIFICATIONS, OR THIS AGREEMENT, WHETHER EXPRESS, IMPLIED, STATUTORY OR OTHERWISE, INCLUDING WITHOUT LIMITATION ANY AND ALL REPRESENTATIONS AND WARRANTIES OF MERCHANTABILITY, FITNESS FOR A PARTICULAR PURPOSE, TITLE, NON−INFRINGEMENT, AND THOSE ARISING FROM A COURSE OF DEALING, TRADE USAGE, TRADE CUSTOM OR TRADE PRACTICE.

onsemi reserves the right to make changes without further notice to any board.

You are responsible for determining whether the board will be suitable for your intended use or application or will achieve your intended results. Prior to using or distributing any systems that have been evaluated, designed or tested using the board, you agree to test and validate your design to confirm the functionality for your application. Any technical, applications or design information or advice, quality characterization, reliability data or other services provided by **onsemi** shall not constitute any representation or warranty by **onsemi**, and no additional obligations or liabilities shall arise from **onsemi** having provided such information or services.

onsemi products including the boards are not designed, intended, or authorized for use in life support systems, or any FDA Class 3 medical devices or medical devices with a similar or equivalent classification in a foreign jurisdiction, or any devices intended for implantation in the human body. You agree to indemnify, defend and hold harmless **onsemi**, its directors, officers, employees, representatives, agents, subsidiaries, affiliates, distributors, and assigns, against any and all liabilities, losses, costs, damages, judgments, and expenses, arising out of any claim, demand, investigation, lawsuit, regulatory action or cause of action arising out of or associated with any unauthorized use, even if such claim alleges that **onsemi** was negligent regarding the design or manufacture of any products and/or the board.

This evaluation board/kit does not fall within the scope of the European Union directives regarding electromagnetic compatibility, restricted substances (RoHS), recycling (WEEE), FCC, CE or UL, and may not meet the technical requirements of these or other related directives.

FCC WARNING − This evaluation board/kit is intended for use for engineering development, demonstration, or evaluation purposes only and is not considered by **onsemi** to be a finished end product fit for general consumer use. It may generate, use, or radiate radio frequency energy and has not been tested for compliance with the limits of computing devices pursuant to part 15 of FCC rules, which are designed to provide reasonable protection against radio frequency interference. Operation of this equipment may cause interference with radio communications, in which case the user shall be responsible, at its expense, to take whatever measures may be required to correct this interference.

onsemi does not convey any license under its patent rights nor the rights of others.

LIMITATIONS OF LIABILITY: **onsemi** shall not be liable for any special, consequential, incidental, indirect or punitive damages, including, but not limited to the costs of requalification, delay, loss of profits or goodwill, arising out of or in connection with the board, even if **onsemi** is advised of the possibility of such damages. In no event shall **onsemi**'s aggregate liability from any obligation arising out of or in connection with the board, under any theory of liability, exceed the purchase price paid for the board, if any.

The board is provided to you subject to the license and other terms per **onsemi**'s standard terms and conditions of sale. For more information and documentation, please visit www.onsemi.com.

ADDITIONAL INFORMATION

TECHNICAL PUBLICATIONS:
Technical Library: www.onsemi.com/design/resources/technical−documentation
onsemi Website: www.onsemi.com

ONLINE SUPPORT: www.onsemi.com/support
For additional information, please contact your local Sales Representative at www.onsemi.com/support/sales