NCV7691GEVB

NCV7691 Current Controller with Automotive LED Lamps in Sequencing Application Evaluation Board User's Manual

ON Semiconductor®

http://onsemi.com

EVAL BOARD USER'S MANUAL

Description

Automotive turn signals are sometimes designed to display an indicator in a fashion such that lights are activated in a sequencing manner to show directional intent.

This evaluation note highlights the use of standard logic integrated circuits with the NCV7691 devices to provide a solution for a sequencing design. The system consists of the LED current controllers (NCV7691 x 3), a voltage regulator (NCV8664), a timer IC (NCV1455B), a shift register (MC74HC164A), and a NAND gate (MC74HC20A).

The evaluation board has an on−board LED array to highlight a sequencing solution for automotive indicators. An additional 10−pin edge connector allows for connection to external LEDs (often at higher current by modifying the current programming resistors).

Features

In addition to the NCV7691 part features, this evaluation board highlights the following:

- Sequencing Functionality
- Open Circuit Reporting
  - Indicator On−board
  - Connection for Off−board Communication
- External LED Load Connectivity
- Bright / Dim Switch for Easy Viewing
- 5 V Regulator Output

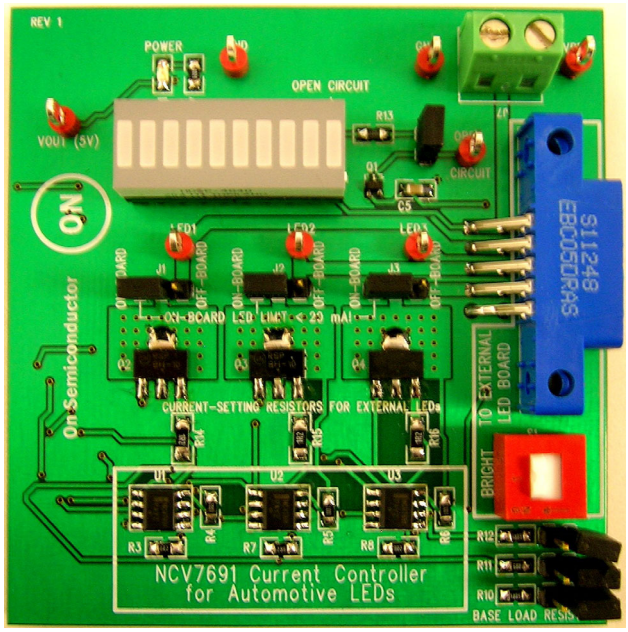

Figure 1. Board Top

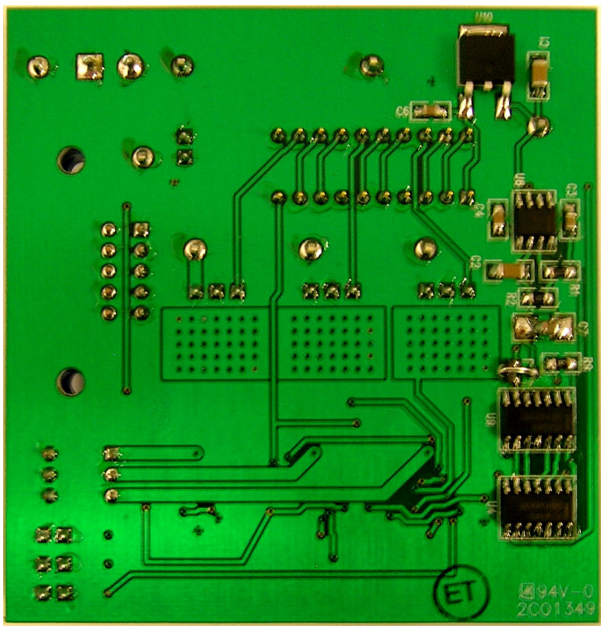

Figure 2. Board Bottom

© Semiconductor Components Industries, LLC, 2014

Basic Demonstration

Figure 3 provides a representation of the display feature of this evaluation board.

1. When the board is powered, 3 sets of LED strings are initialized in the off state.
2. The 1st string of LEDs turns on.
3. After a delay period, the 2nd string of LEDs turns on while the 1st string remains illuminated.
4. After a similar delay period, the 3rd string of LEDs turns on while the 1st and 2nd string remain illuminated.
5. All 3 strings remain illuminated for an extended period of time.
6. The progression is repeated as all 3 sets of LED strings transition to the off state.

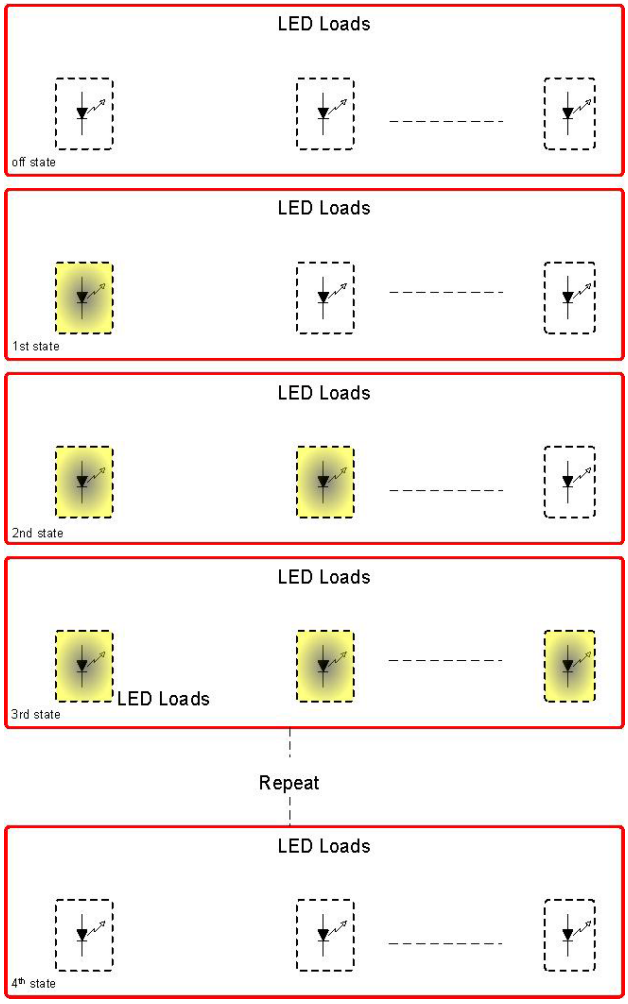

Figure 3. NCV7691 Sequencing

Open Circuit Detection

The NCV7691 utilizes the voltage feedback network to the FB pin for detection of open circuit conditions to be reported at the FLTS pin. An open circuit condition using this board can be simulated by removing Jumpers J1, J2, and J3. The open circuit is indicated at the on−board LED bar, but J5 may be removed to route the signal off the board if desired. Detection of open circuit conditions require jumpers J8, J9, and J10 to be connected when using the on−board LED array LED loads.

The low current setup with the LED array using supplied board resistor values for R3, R7, and R8 of 8.2 Ω will illuminate each segment of the LED array at 18 mA. The drive capability of the NCV7691 to the base of the external transistor has a value per the datasheet between 14 mA and 30 mA. An open circuit condition might fail to be detected if all of the drive current is directed to the base of the BCP56 device to the emitter of the BCP56 device through to the sense resistors on the FB pins (R3, R7, R8). e.g. If the drive capability of the NCV7691 is 18 mA, and 18 mA is provided to the base, the voltage at the FB pin will be at the regulation voltage (150 mV) with or without an open circuit event. The voltage generated on the FB pin will be high enough for the system to think the device is regulating and no open circuit exists. This is why three jumpers are provided on the demo board (J8, J9, J10). Connecting these jumpers provides a load directly to the base drive node to eliminate some of the base drive so that an open circuit condition will be detected.

EVALUATION BOARD SCHEMATIC

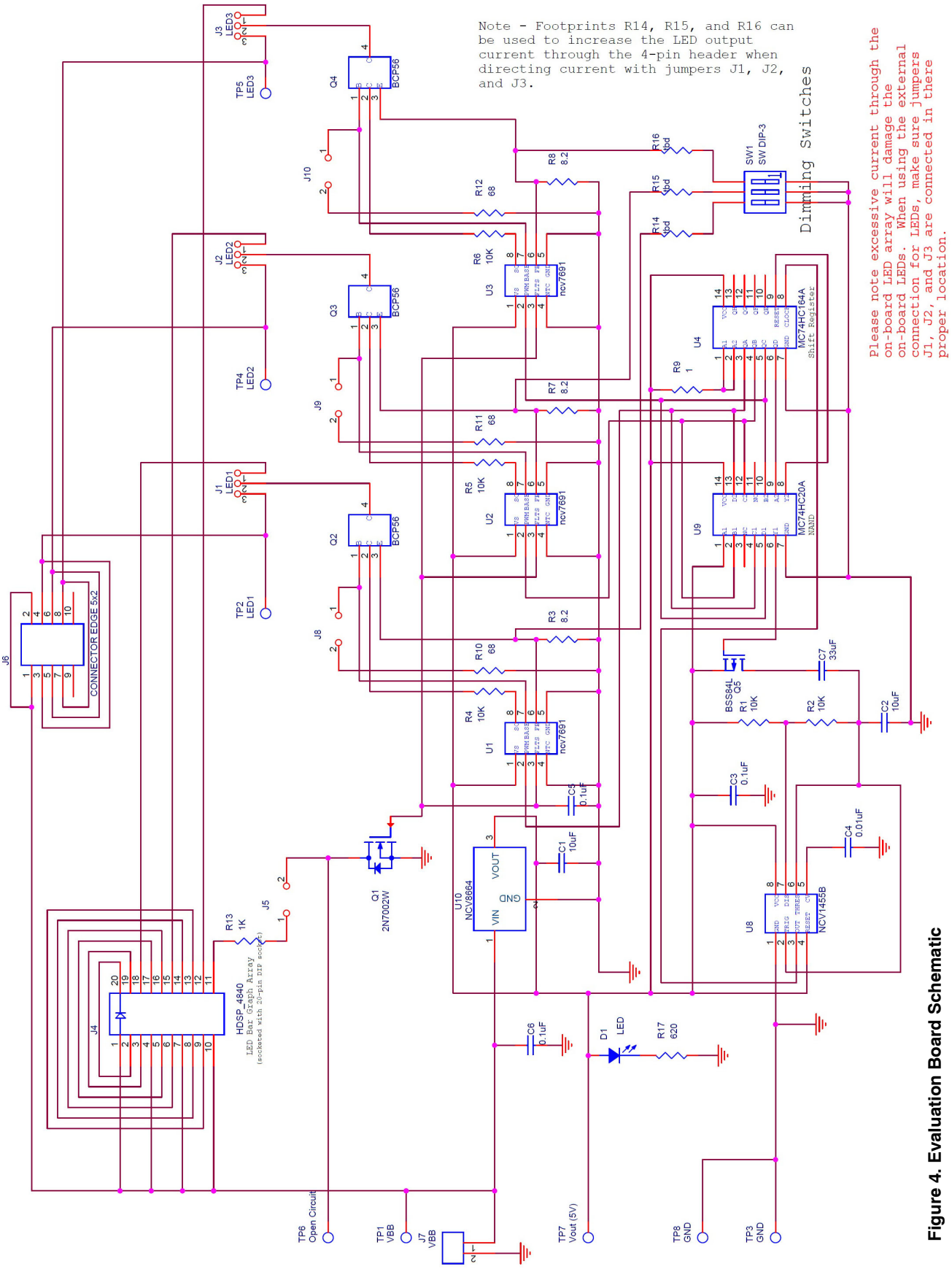

Figure 4. Evaluation Board Schematic

THEORY OF OPERATION

The sequencing system design is comprised of all the blocks shown in the diagram below. The Linear regulator provides a 5 V regulated line to the logic ICs (Timer, Shift Register, and NAND gate). The timer provides the clock for the shift register, and the NAND gate provides the required state to the NCV7691 pre−driver devices.

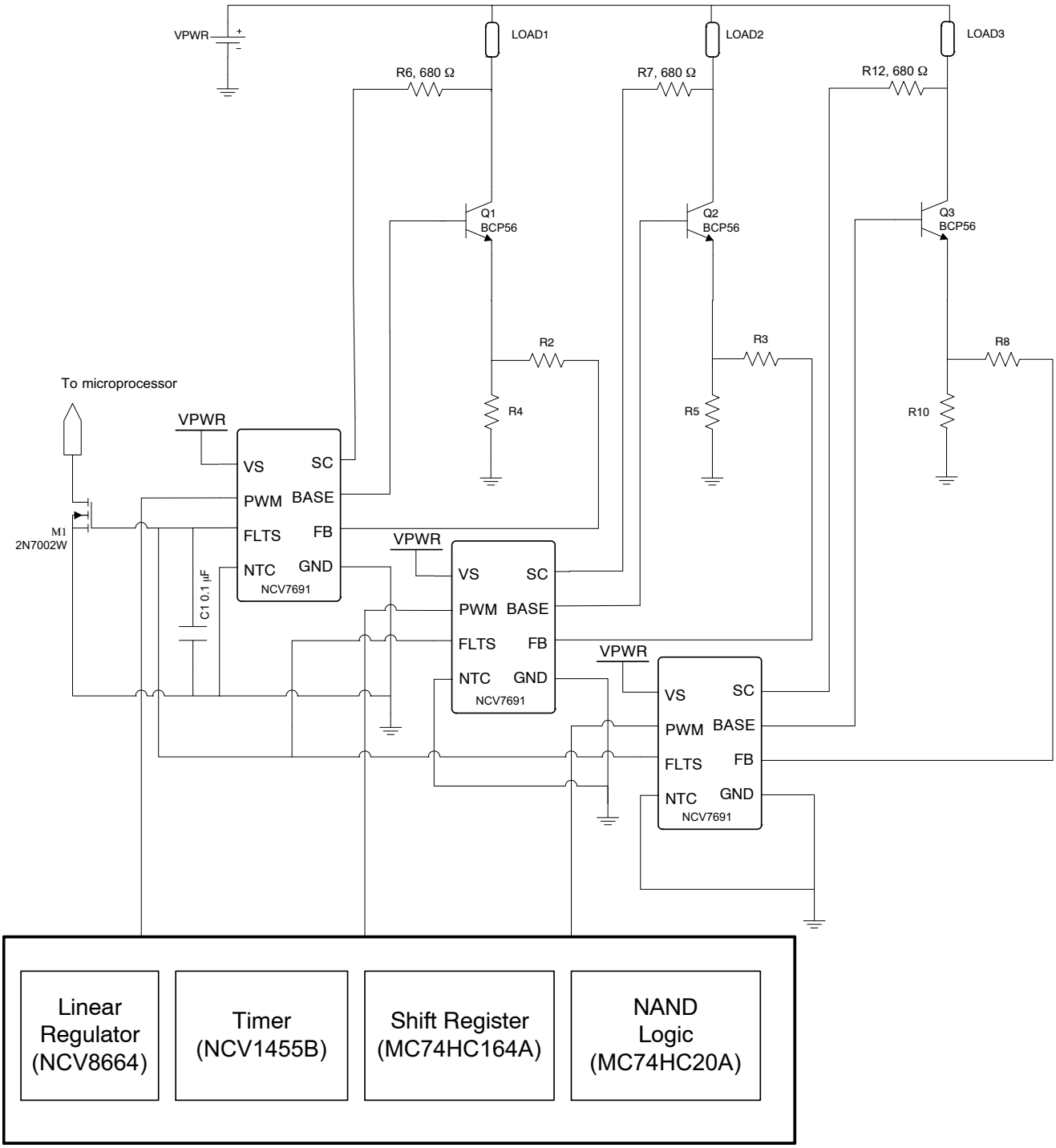

Figure 5.

LOGIC

The NCV1455B timer output is connected to the clock input of the MC74HC164A shift register. At every rising edge of clock, the shift register outputs Q_A, Q_B, and Q_C change. In four clock pulses, the output $Q_AQ_BQ_C$ cycles through values 100, 110, 111, and 000. The following figure displays the timing of these outputs relative to the clock input.

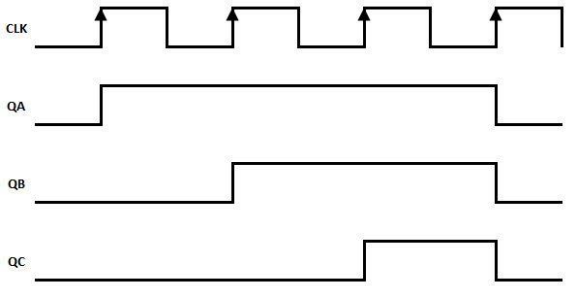

Figure 6. Shift Register Clock Input and Parallel Data Outputs

This is also highlighted in the scope capture of Figure 7.

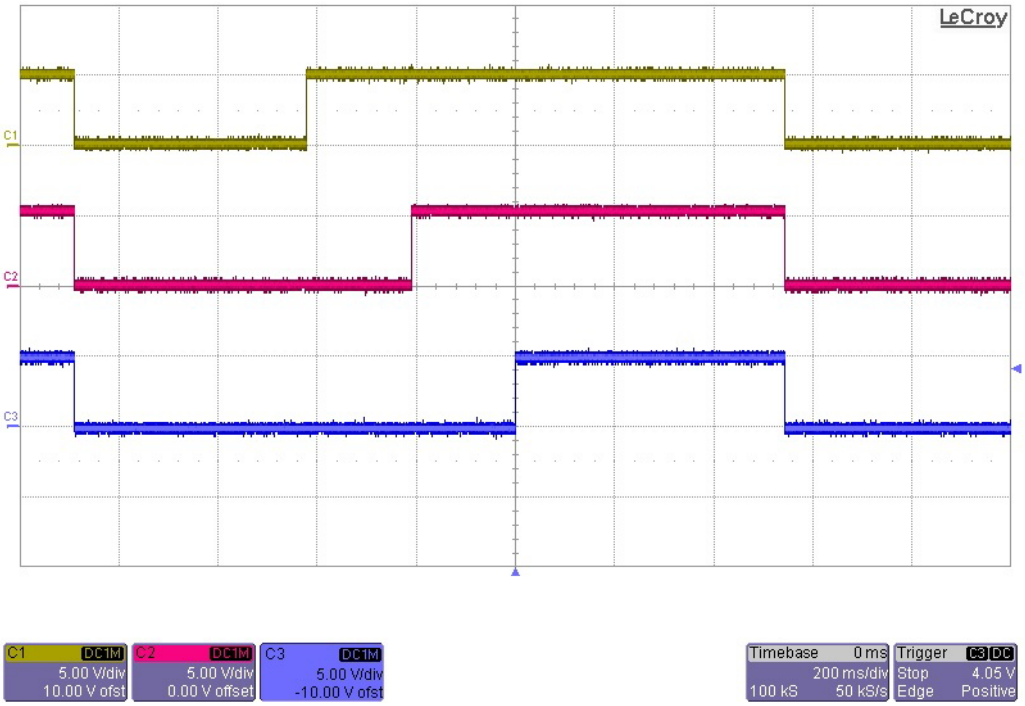

Figure 7. Shift Register (MC74HC164A) Outputs, Pin 3 (yellow), Pin 4 (pink), Pin 5 (blue)

The evaluation board includes three NCV7691 current controller ICs that drive one LED string each. Shift register outputs Q_A, Q_B, and Q_C are connected directly to the NCV7691 PWM inputs. When the PWM signal goes high, the driver output goes high and the LEDs turns on. Therefore, when the shift register outputs a signal of 100, LED1 is on. A shift register output of 110 corresponds to LED1 and LED2 turning on, and a signal of 111 will turn all three LEDs on. When Q_A, Q_B, and Q_C are all 0, all three LEDs are off.

The MC74HC20A (NAND) device provides the logic necessary to extend the timer when the 111 condition is present in the shift register. The MC74HC20A interfaces to the BSS84L PFET during this condition adding extra capacitance (C7) in the timer circuit (NCV1455B). Automotive turn signal applications frequently use this to indicate a direction, and then hold the signal present for a duration of time longer than the shifted signal.

ABSOLUTE MAXIMUM RATINGS

The operation of the NCV7691 sequencer evaluation board works as a standalone presentation for the customer highlighting the sequencing function often used in automotive turn signals. The on−board LED array is used for situations where simplicity is needed. An additional edge−connector can be used for alternative LEDs. Jumpers J1, J2, and J3 provide the interface switch for the edge−connector. Higher currents are assumed to be used with the edge−connector, so extra care must be taken not to reposition the jumpers for high currents through the on−board LED array.

Table 1. ABSOLUTE MAXIMUM RATINGS

Rating	Value	Unit
Supply Voltage to board (TP1, VBB) (NCV8664)	−0.3 V (min), 45 (max)	V
LED Current Source (TP2, TP4, TP5) (Edge Connector)(BCP56)	1	A
LED Current Source max voltage (TP2, TP4, TP5) (Edge Connector)(BCP56)	80	V
Open Circuit Voltage (TP6, Open Circuit) (2N7002W)	60	V
Open Circuit Sink Current (TP6, Open Circuit) (2N7002W)	220	mA
Junction Temperature (NCV7691)	−40 to 150	°C
Ambient Temperature (Evaluation Board)	−40 to 105	°C

Stresses exceeding Maximum Ratings may damage the device. Maximum Ratings are stress ratings only. Functional operation above the Recommended Operating Conditions is not implied. Extended exposure to stresses above the Recommended Operating Conditions may affect device reliability.

Table 2. RECOMMENDED BOARD OPERATING CONDITIONS

Rating	Value		Unit
	Min	Max	
External Digital Supply Voltage (VBB)	7	16	V
LED Current Source(TP2, TP4, TP5)(Edge Connector) (Note 1)	–	1	A
Junction Temperature (NCV7691)	−40	150	°C

1. Beta of the BCP56 external driver at the specified operating temperature must be considered when operating at high currents in order to obtain the system design goals.

Table 3. PIN FUNCTION DESCRIPTION

Connector	Pin Number	Terminal Name	Description
Power	TP1 Edge Connector Pins 1 & 2	VBB	Power supply input voltage (14 V).
	GND	GND	Ground.
Connection Points	TP2 Edge Connector Pins 3 & 4	LED1	Connection to BCP56 collector current source output for U1 (NCV7691).
	TP4 Edge Connector Pins 5 & 6	LED2	Connection to BCP56 collector current source output for U2 (NCV7691).
	TP5 Edge Connector Pins 7 & 8	LED3	Connection to BCP56 collector current source output for U3 (NCV7691).
Test Points	TP6	Open Circuit	Or'd connection from the 3 NCV7691 open circuit detection.
	TP7	Vout (5 V)	Connection to the NCV8664 5 V regulator output.

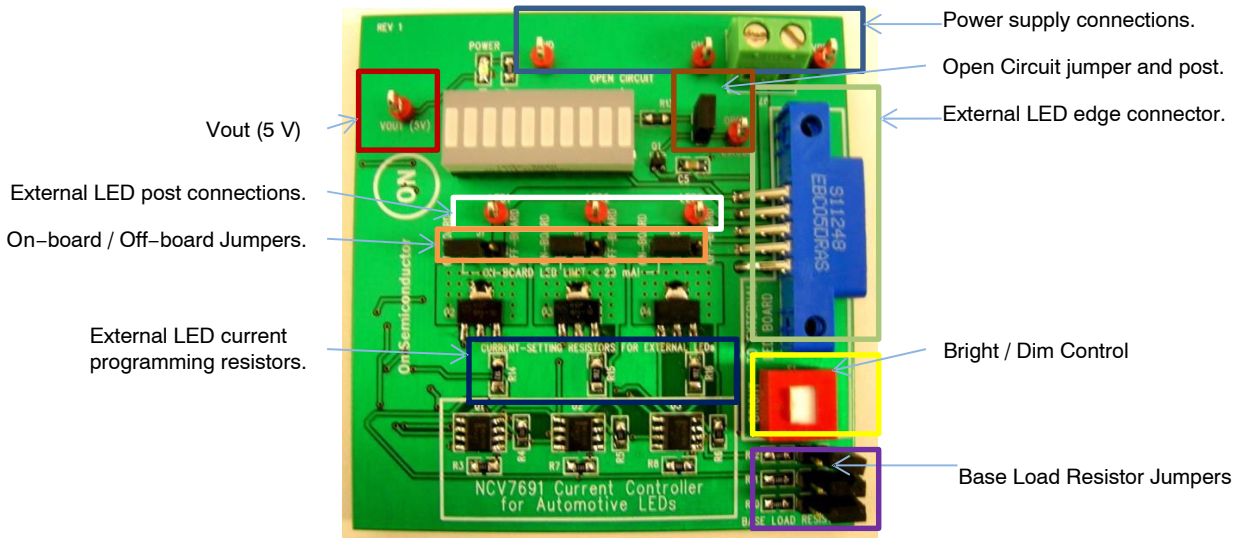

Figure 8. Evaluation Board Highlights

OPERATIONAL GUIDELINES

The material necessary to successfully use the evaluation boards is listed below:

- NCV7691 Evaluation Board
- 14 V Power Supply Capable of driving 1 A.

Connect a 14 V power supply to the power supply connections. The board should start working immediately.

Evaluation Board Options

1. Open Circuit Jumper and Post. Allows disconnection from the drain of the open circuit indicator from the LED array to an external connection.
2. External LED edge connector. Connection for use with external LEDs. Note, the On−board / Off−board jumpers should be moved to the right for off−board connection. Reference the NCV7691/D datasheet for details on choosing a resistor value.
3. Bright / Dim Control. Controls a parallel connection for a programming current resistor for viewing ease.
4. External LED current programming resistors – Current setting resistors for high current switched in with the Bright / Dim dipswitch.
5. On−board / Off−board Jumpers. For setting the board for use with the LED array or an external LED via the edge connector.
6. External LED post connection. Optional connection for external LEDs as an alternative to the edge connector.
7. Vout (5 V). Connection to the 5 V regulator used to power the on−board logic.

Using the Evaluation Board with external LEDs

1. Calculate the programming resistor value you need by referring to the NCV7691/D datasheet.

a.) At nominal operating voltages the equation for programming current is 0.15 V/R_X where R_X is the equivalent resistance from the NCV7691 FB pin to ground.

b.) On the board, using switch SW1 disengaged (DIM), the resistors are R3 (for LED1), R7 (for LED2), and R8 (for LED3). When the switch is engaged (BRIGHT) a resistor is put in parallel with the DIM resistor value. These are R14 (for LED1), R15 (for LED2), and R16 (for LED3).

2. Once the resistors are mounted on the board, move the jumpers from on−board to off−board (J1, J2, and J3).
3. Connect your external LEDs cathode either through the edge connector or the posts (TP2 [LED1], TP4 [LED2], and TP5[LED3]). The LED anode (string) should be tied to a high voltage (VBB suggested).
4. Connect a 14 V power supply to the power supply connections. The board should start working immediately.

Table 4. JUMPER DESCRIPTION

Jumper #	Description
J1−J3	Directs current to on−board LED array or external LED board via the edge connector. Removing jumpers simulates an open circuit condition.
J5	Removes open load indicator from LED array to transistor source output (Q1) when jumper is removed.
J8−J10	Adds loads (R10, R11, R12) to the bases of the BCP56 transistors when the jumper is added for use with light loads to allow for open load detection.

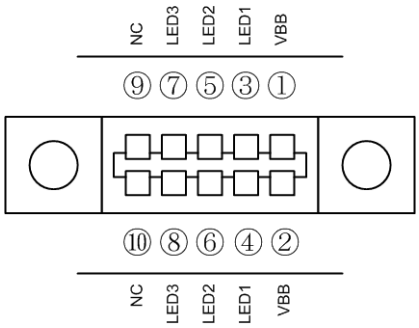

Figure 9. NCV7691 Sequencing

BILL OF MATERIALS

Table 5. NCV7691 SEQUENCING EVALUATION BOARD BILL OF MATERIALS

Designator	QTY	Description	Value	Toler-ance	Footprint	Manufacturer	Manufacturer Part Number	Substi-tution Allowed
U1, U2, U3	3	NCV7691 Current Controller	–––	–––	SOIC−8	ON Semiconductor	NCV7691D1R2G	No
U4	1	8−Bit Serial−Input/Parallel−Output Shift Register	–––	–––	SOIC−14	ON Semiconductor	MC74HC164ADR2G	Yes
U8	1	Timer	–––	–––	SOIC−8	ON Semiconductor	NCV1455BDR2G	Yes
U9	1	Dual 4−Input NAND Gate	–––	–––	SOIC−14	ON Semiconductor	MC74HC20ADR2G	Yes
U10	1	Very Low Iq Low Dropout Linear Regulator	–––	–––	DPAK	ON Semiconductor	NCV8664DT50RKG	Yes
Q1	1	Small Signal MOSFET	–––	–––	SC−70 / SOT−323	ON Semiconductor	2N7002WT1G	Yes
Q2, Q3, Q4	3	NPN Silicon Epitaxial Transistor	–––	–––	SOT−223	ON Semiconductor	BCP56−10T1G	No
Q5	1	Single P. Channel Power MOSFET	–––	–––	SOT−23−3	ON Semiconductor	BVSS84LT1G	Yes
R1, R2	2	10K Timer Resistor	10K	1%	0805	Vishay/Dale	CRCW080510K0FKEA	Yes
R4, R5, R6	3	10K Short Circuit Interface Resistor	10K	1%	0805	Vishay/Dale	CRCW080510K0FKEA	Yes
R13	1	1K Open−circuit LED drive resistor	1K	1%	0805	Vishay/Dale	CRCW08051K00FKEA	Yes
R3, R7, R8	3	8.2 Ω LED array programming resistors	8.2	1%	0805	Vishay/Dale	CRCW08058R20FKEA	Yes
R9	1	1 Ω Shift register pull−up	1	1%	0805	Vishay/Dale	CRCW08051R00FKEA	Yes
R14, R15, R16	3	High Current programming resistor	Customer Defined	1%	1206	Vishay/Dale	Customer Defined	Yes
R17	1	620 Ω 5 V LED drive resistor	620	1%	0805	Vishay/Dale	CRCW0805620RFKEA	Yes
C1	1	Regulator Output Capacitor	10 μF, 10 V	10%	1206	Murata Electronics North America	GRM31CR61A106KA01L	Yes
C2	1	Timer Capacitor	10 μF, 10 V	10%	1206	Murata Electronics North America	GRM31CR61A106KA01L	Yes
C3	1	Supply Line Filter Capacitor	0.1 μF, 50 V	10%	0805	Murata Electronics North America	GRM21BR71H104KA01L	Yes
C4	1	Timer Control Voltage Capacitor	0.01 μF, 50 V	10%	0805	Murata Electronics North America	GRM216R71H103KA01D	Yes

Table 5. NCV7691 SEQUENCING EVALUATION BOARD BILL OF MATERIALS

Designator	QTY	Description	Value	Toler-ance	Footprint	Manufacturer	Manufacturer Part Number	Substi-tution Allowed
C5	1	Fault Timer Capacitor	0.1 μF, 50 V	10%	0805	Murata Electronics North America	GRM21BR71H104KA01L	Yes
C6	1	Power Supply Input Filter Capacitor	0.1 μF, 50 V	10%	0805	Murata Electronics North America	GRM21BR71H104KA01L	Yes
C7	1	Extended Timer Capacitor	33 μF	20%	1206	TDK Corporation	C3216X5R1A336M160AB	Yes
D1	1	5 V LED Indicator	–––	–––	0805	Lite–On Inc	LTST–C171GKT	Yes
J1, J2, J3	3	On–Board / Off–Board Jumper	–––	–––	JP3	Molex Connector Corporation	22–28–4033	Yes
J4	1	LED Array Socket	–––	–––	DIP20	3M	4820–3000–CP	Yes
–––	1	LED Array	–––	–––	DIP20	Avago	HDSP–4840	Yes
J5	1	Open Circuit Jumper	–––	–––	JMP	Molex Connector Corporation	22–28–4023	Yes
J6	1	10–pin Edge Connector	–––	–––	EDGECO NN10	Sullins Connector Solutions	EBC05DRAS	Yes
J7	1	Supply Input Terminal	–––	–––	MKDSN2	Phoenix Contact	1729128	Yes
SW1	1	Bright / Dim Switch	–––	–––	DIP6	Grayhill Inc	78G01ST	Yes
TP1–TP8	8	Test Point	–––	–––	TP	Keystone Electronics	5010	Yes

onsemi, onsemi, and other names, marks, and brands are registered and/or common law trademarks of Semiconductor Components Industries, LLC dba "**onsemi**" or its affiliates and/or subsidiaries in the United States and/or other countries. **onsemi** owns the rights to a number of patents, trademarks, copyrights, trade secrets, and other intellectual property. A listing of **onsemi**'s product/patent coverage may be accessed at www.onsemi.com/site/pdf/Patent−Marking.pdf. **onsemi** is an Equal Opportunity/Affirmative Action Employer. This literature is subject to all applicable copyright laws and is not for resale in any manner.

The evaluation board/kit (research and development board/kit) (hereinafter the "board") is not a finished product and is not available for sale to consumers. The board is only intended for research, development, demonstration and evaluation purposes and will only be used in laboratory/development areas by persons with an engineering/technical training and familiar with the risks associated with handling electrical/mechanical components, systems and subsystems. This person assumes full responsibility/liability for proper and safe handling. Any other use, resale or redistribution for any other purpose is strictly prohibited.

THE BOARD IS PROVIDED BY ONSEMI TO YOU "AS IS" AND WITHOUT ANY REPRESENTATIONS OR WARRANTIES WHATSOEVER. WITHOUT LIMITING THE FOREGOING, ONSEMI (AND ITS LICENSORS/SUPPLIERS) HEREBY DISCLAIMS ANY AND ALL REPRESENTATIONS AND WARRANTIES IN RELATION TO THE BOARD, ANY MODIFICATIONS, OR THIS AGREEMENT, WHETHER EXPRESS, IMPLIED, STATUTORY OR OTHERWISE, INCLUDING WITHOUT LIMITATION ANY AND ALL REPRESENTATIONS AND WARRANTIES OF MERCHANTABILITY, FITNESS FOR A PARTICULAR PURPOSE, TITLE, NON−INFRINGEMENT, AND THOSE ARISING FROM A COURSE OF DEALING, TRADE USAGE, TRADE CUSTOM OR TRADE PRACTICE.

onsemi reserves the right to make changes without further notice to any board.

You are responsible for determining whether the board will be suitable for your intended use or application or will achieve your intended results. Prior to using or distributing any systems that have been evaluated, designed or tested using the board, you agree to test and validate your design to confirm the functionality for your application. Any technical, applications or design information or advice, quality characterization, reliability data or other services provided by **onsemi** shall not constitute any representation or warranty by **onsemi**, and no additional obligations or liabilities shall arise from **onsemi** having provided such information or services.

onsemi products including the boards are not designed, intended, or authorized for use in life support systems, or any FDA Class 3 medical devices or medical devices with a similar or equivalent classification in a foreign jurisdiction, or any devices intended for implantation in the human body. You agree to indemnify, defend and hold harmless **onsemi**, its directors, officers, employees, representatives, agents, subsidiaries, affiliates, distributors, and assigns, against any and all liabilities, losses, costs, damages, judgments, and expenses, arising out of any claim, demand, investigation, lawsuit, regulatory action or cause of action arising out of or associated with any unauthorized use, even if such claim alleges that **onsemi** was negligent regarding the design or manufacture of any products and/or the board.

This evaluation board/kit does not fall within the scope of the European Union directives regarding electromagnetic compatibility, restricted substances (RoHS), recycling (WEEE), FCC, CE or UL, and may not meet the technical requirements of these or other related directives.

FCC WARNING − This evaluation board/kit is intended for use for engineering development, demonstration, or evaluation purposes only and is not considered by **onsemi** to be a finished end product fit for general consumer use. It may generate, use, or radiate radio frequency energy and has not been tested for compliance with the limits of computing devices pursuant to part 15 of FCC rules, which are designed to provide reasonable protection against radio frequency interference. Operation of this equipment may cause interference with radio communications, in which case the user shall be responsible, at its expense, to take whatever measures may be required to correct this interference.

onsemi does not convey any license under its patent rights nor the rights of others.

LIMITATIONS OF LIABILITY: **onsemi** shall not be liable for any special, consequential, incidental, indirect or punitive damages, including, but not limited to the costs of requalification, delay, loss of profits or goodwill, arising out of or in connection with the board, even if **onsemi** is advised of the possibility of such damages. In no event shall **onsemi**'s aggregate liability from any obligation arising out of or in connection with the board, under any theory of liability, exceed the purchase price paid for the board, if any.

The board is provided to you subject to the license and other terms per **onsemi**'s standard terms and conditions of sale. For more information and documentation, please visit www.onsemi.com.

ADDITIONAL INFORMATION

TECHNICAL PUBLICATIONS:
Technical Library: www.onsemi.com/design/resources/technical−documentation
onsemi Website: www.onsemi.com

ONLINE SUPPORT: www.onsemi.com/support
For additional information, please contact your local Sales Representative at www.onsemi.com/support/sales