NCV7691RCLEVB

Advance Information

NCV7691 8-Channel Rear Combo / Daylight Running Light Evaluation Board User's Manual

ON Semiconductor®

www.onsemi.com

EVAL BOARD USER'S MANUAL

Introduction

The evaluation board demonstrates rear combination / daylight running light (RCL/DRL) solution with up to eight LED string. The board regulates constant current of 100 mA (68 to 150 mA) through each on−board LED string consisting of three red or two white LEDs in the wide range of the supply voltage. The current is reduced for the board temperature above 90°C. The board is designed in order to provide good cooling of the active components with no extra cost. Additionally, a heat sink may be mounted on the bottom side of the board to improve the thermal capability of the board. In case of LEDs short or opening, the current sources are disabled and the fault may be detected by the ECU diagnostics.

On−board LEDs may be easily replaced by external ones.

Evaluation Board Features

- Wide Range of Supply Voltage: 7 to 40 V
- Eight LED Strings with On−board Red or White LEDs (RCL/DRL)
- Nominal LED Current 100 mA (150 mA max.)
- Over−temperature Current Fold−back Protection
- OPEN Jumper in each String Allowing LEDs Disconnection
- SHORT Jumper in each String for Short Emulation or Connection of the External LEDs
- Led Short−circuit and Open−load Emulation Jumpers
- Optional External PWM Input
- Optional Error Flagging through Indication LED and FLTS Output
- Positions for Optional EMC Capacitors
- One−side Components Assembly
- Passive Cooling (Optional Heat Sink may be Attached to the Bottom)

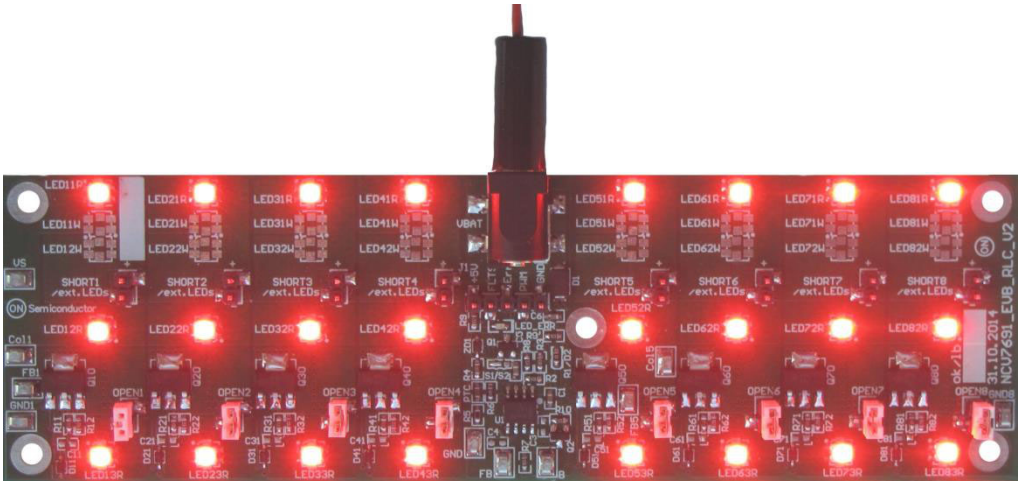

Figure 1. Running NCV7691 Evaluation Board Picture

This document contains information on a new product. Specifications and information herein are subject to change without notice.

© Semiconductor Components Industries, LLC, 2015

May, 2015 − Rev. P0

Publication Order Number:
EVBUM2299/D

Table 1. ABSOLUTE MAXIMUM RATINGS

Rating	Value	Unit
Supply Voltage (Vbat)	−40 to +40	V
LED String Current (thermally limited)	150	mA
PWM, FLTS, Err Voltage (J1 connector)	−0.3 to Vbat	V
Error pin current (J1 connector, pin 3)	0 to 200	mA
Junction Temperature (NCV7691, BCP56)	−40 to +150	°C
Junction Temperature (ASMT−QRBD−AEF0E, ASMT−QWBF−NKL0E)	−40 to +125	°C
Ambient Temperature	−40 to +105	°C

Stresses exceeding those listed in the Maximum Ratings table may damage the device. If any of these limits are exceeded, device functionality should not be assumed, damage may occur and reliability may be affected.

Table 2. RECOMMENDED BOARD OPERATING CONDITIONS

Rating	Value	Unit
Supply Voltage (Vbat)	7 to 18	V
Rated LED string Current (VS < 18 V, Tboard < +90°C)	68 /100 /150	mA
Open−Load or Short−Circuit board consumption (VS = 14 V)	max. 7	mA
Ambient Temperature (for rated LED current)	−40 to +70	°C

REAR COMBO / DAYLIGHT RUNNING LIGHT EVALUATION BOARD SCHEMATIC

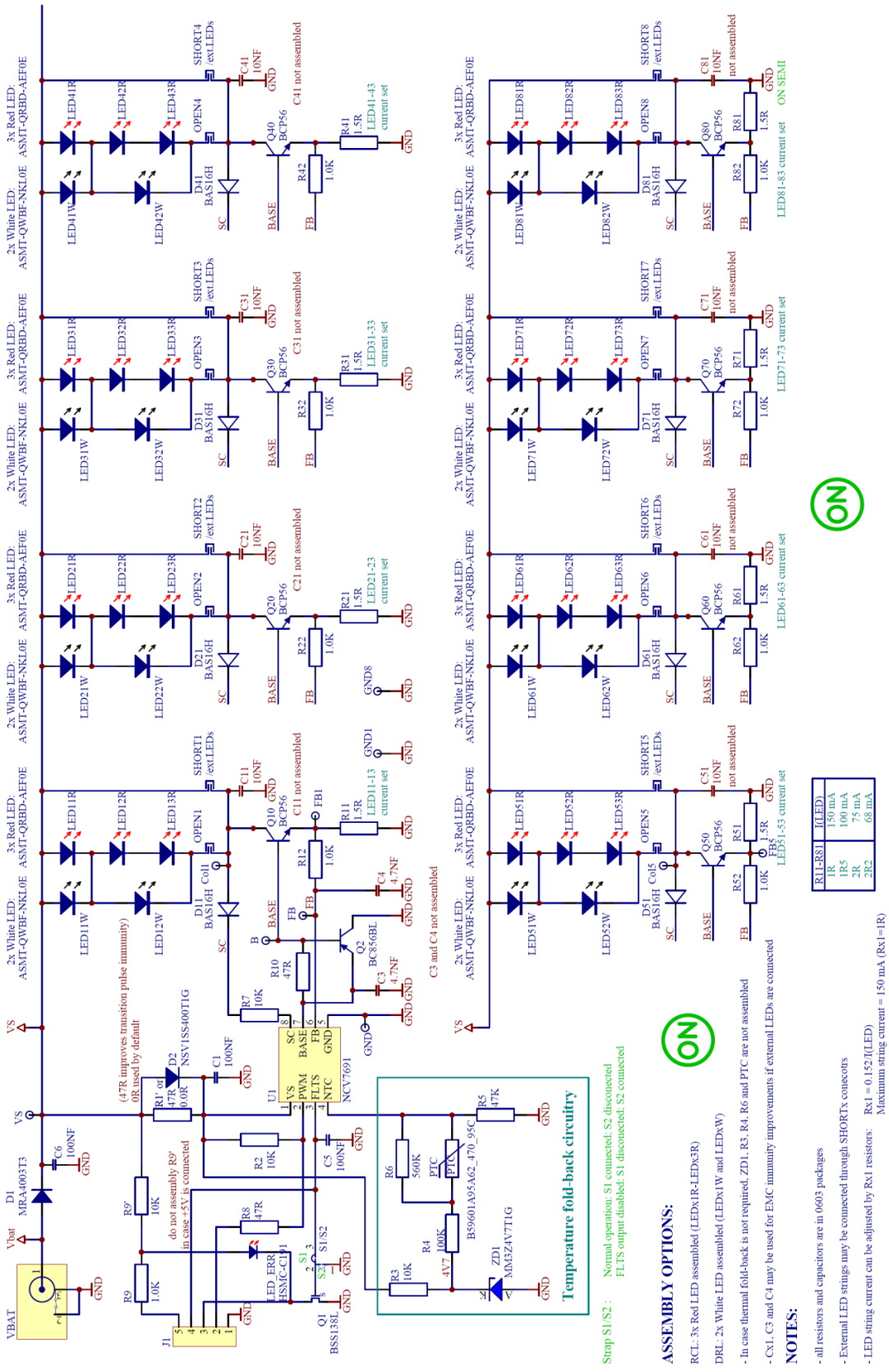

Figure 2. NCV7691 RCL/DRL Evaluation Board Schematic

Table 3. INTERFACE FUNCTION DESCRIPTION

Connector Name	Connector Type	Description / Function
VBAT	2.1 mm DC supply	Supply battery input
OPEN1−8	SMD Jumper	Removing the jumper emulates open LED condition
SHORT1−8	SMD Jumper	Shorting terminals by the jumper emulates short LED condition OR terminal for external LEDs
B	Test Point	BASE output of NCV7691 / NPN base
Col1	Test Point	String 1 NPN collector
Col5	Test Point	String 5 NPN collector
FB	Test Point	FB output of NCV7691
FB1	Test Point	String 1 NPN emitter / feedback resistor
FB5	Test Point	String 5 NPN emitter / feedback resistor
J1	SMD Header	Control/diagnostic functions: Pin 1: GND Pin 2: PWM input (10k pull−up to VS) Pin 3: Error signal (active low, pull−up to VS through LED and 10k) Pin 4: FLTS pin of NCV7691 Pin 5: Alternative pull−up input for the error signal (if used, remove R9')

GETTING STARTED

The board is supplied through a standard 5.5 x 2.1 mm DC connector. Nominal supply voltage ranges from 7 to 18 V. Below 7 V, the current through the LEDs starts decreasing. For battery voltage above 18 V, the LED current is reduced by the over−voltage fold back to reduce the power dissipation.

The thermal fold−back circuitry ensures the board temperature remains within the safe range (see following chapter for details).

Two jumpers in each string emulate LEDs short or opening. By default, OPEN jumper is closed while SHORT terminals are not shorted. Alternatively, external LEDs may be connected through SHORT header while on−board LEDs are disconnected.

The LEDs current is defined by Rx1 resistors. By default, it is set to 100 mA, but may be changed using following formula:

- With no thermal fold−back (NTC pin grounded):

$$R1 = \frac{\text{FB Regulation Voltage}}{I_{LED}} \approx \frac{0.15}{I_{LED}}$$

- With thermal fold−back circuitry on NTC pin:

$$R1 = \frac{V_{NTC}}{10 \cdot I_{LED}} \approx \frac{1.5}{10 \cdot I_{LED}} = \frac{0.15}{I_{LED}}$$

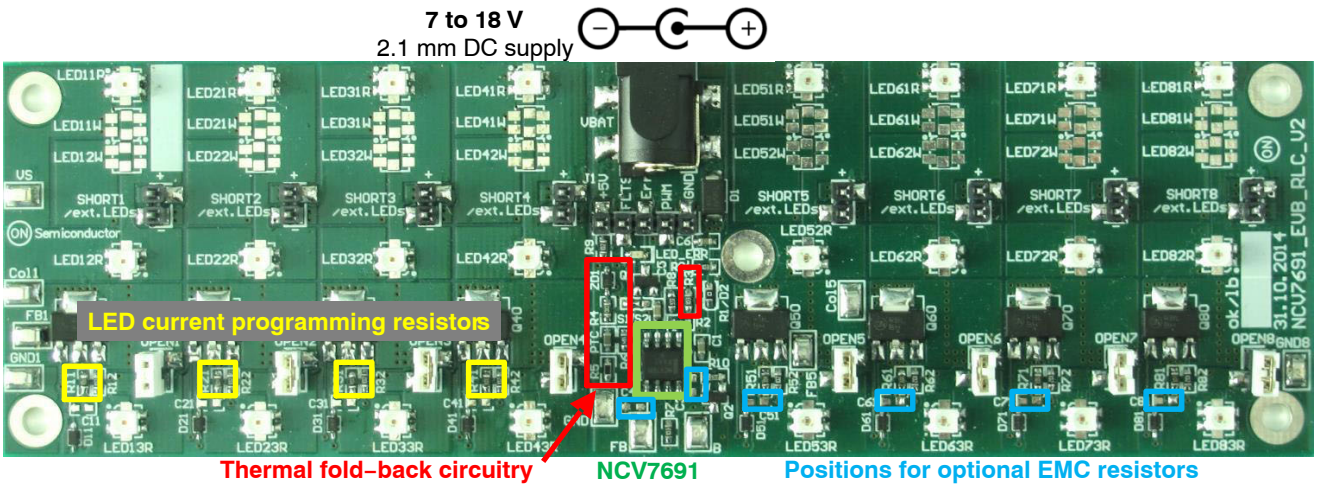

Figure 3. NCV7691 8−channel Evaluation Board Picture

Modules Control Strategy

The board is designed to operate in standard “One Wire Driver Body ECU” and decentralized architecture.

In the first case, both control and diagnosis is done through one supply wire. The dimming might be provided through the PWM applied to the High−side SmartFET in the body ECU. At the same time, the SmartFET allows diagnosis of the failure on the LED module (open load or short−circuit) (see Figure 3). In case of both LED short and disconnection, NCV7691 disables all the NPN bipolars.

In decentralized operation, extra wires are needed for the control and diagnosis (Figure 4). For this purpose, header J1 is available on the board for easy access to FLTS and PWM functions of NCV7691.

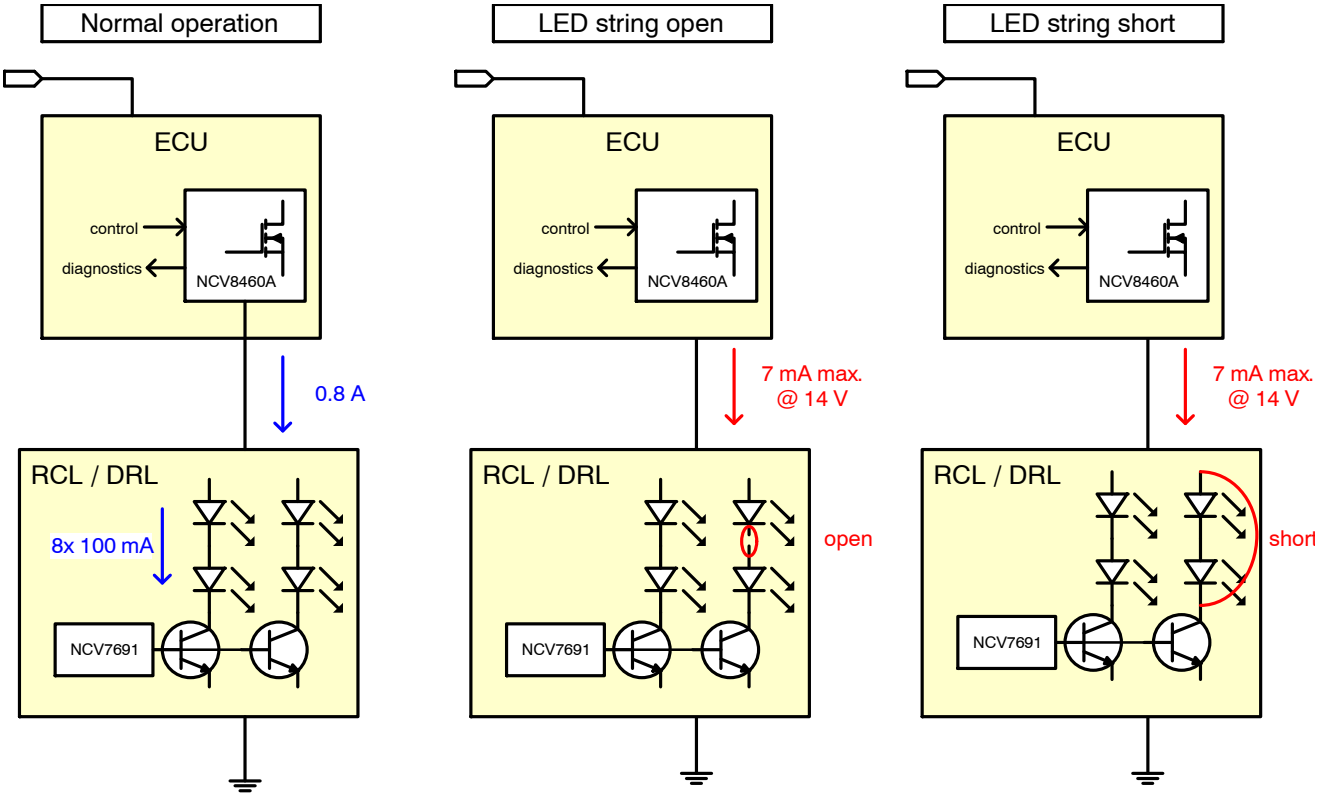

Figure 4. Centralized One Wire System Diagram

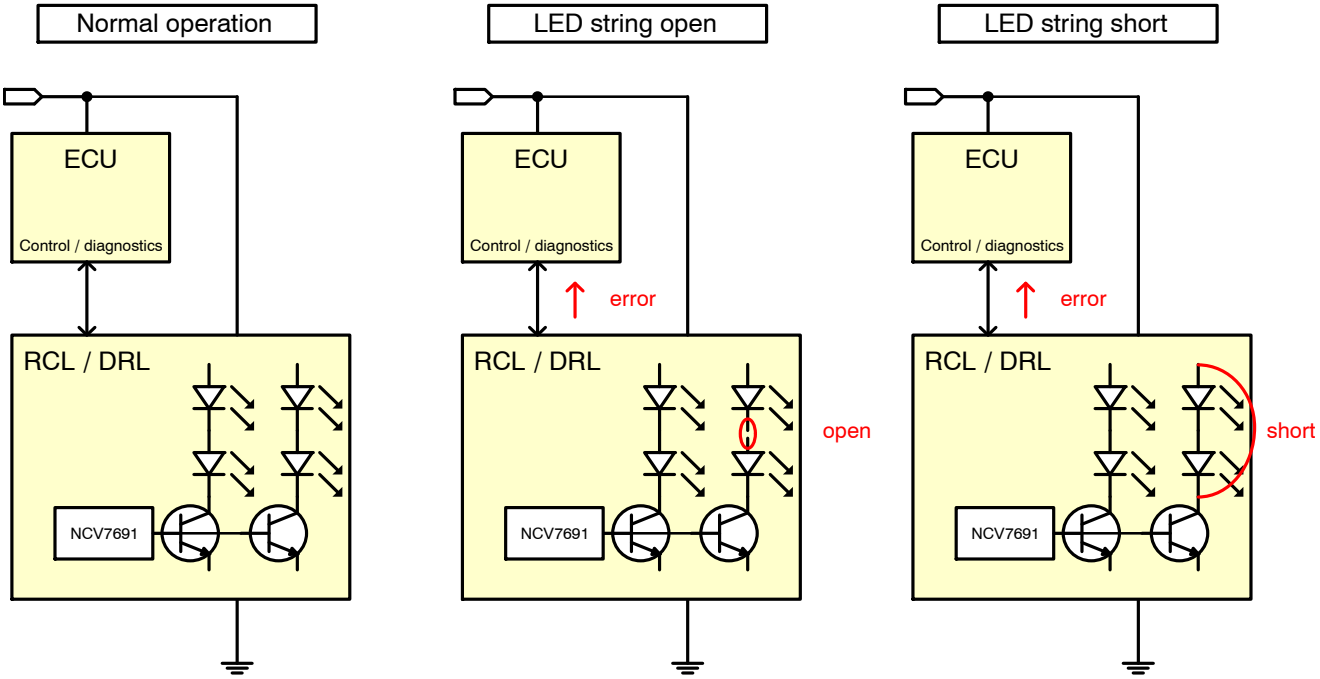

Figure 5. De−centralized System Diagram

Open LED String Diagnostics

NCV7691 includes Open Load Detection feature. When the LED is open, the control loop tries to increase the BASE current to reach 152 mV on the FB pin. As the BASE current is limited to typ. 25 mA, the FB voltage drops below the target level. When the FB voltage decreases below the Open Load Detection FB Threshold (typ. 75 mA), an open load is detected after a period defined by a capacitor connected to the FLTS pin. Figure 6 demonstrates an open load situation on two−string application.

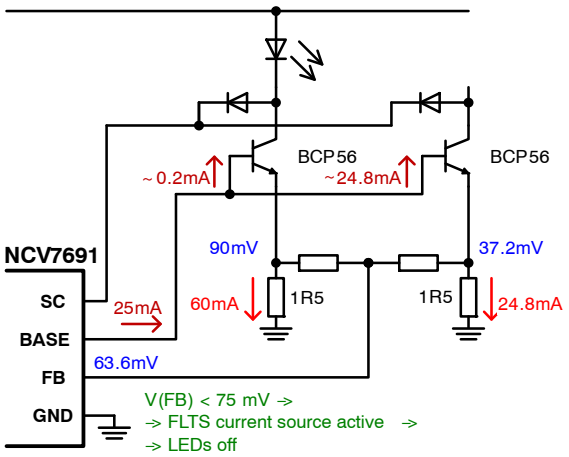

Figure 6. Open Load Detection Principle

In multi−string applications with high−beta transistors, the feedback voltage from individual strings is averaged, so one defective LED string does not always lead to the open load detection.

One of the ways to improve the open load detection capability is more precise external BASE current limitation. An example of the circuit with one extra resistor and PNP bipolar is shown in Figure 6.

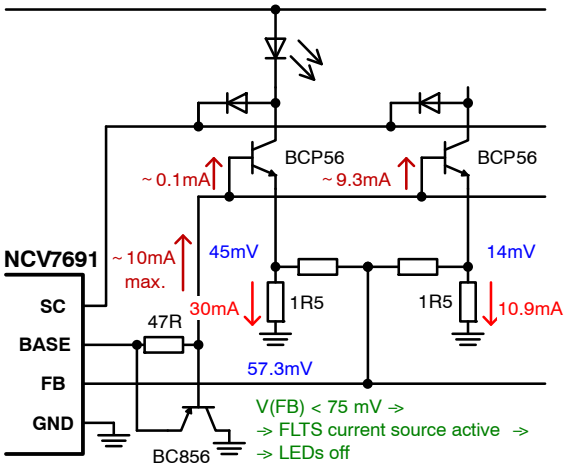

Figure 7. Improved Open Load Detection for 8 Strings

Short LED Diagnostics

NCV7691 contains a LED string short detection based on LED string voltage measurement (pin SC). In case the voltage difference between the VS and SC pins drops below typ. 2 V (Figure 7), the BASE is switched off and FLTS current source is active to flag an error. In multi−string applications, an OR−circuitry (e.g. diodes) has to be used to cover all the strings.

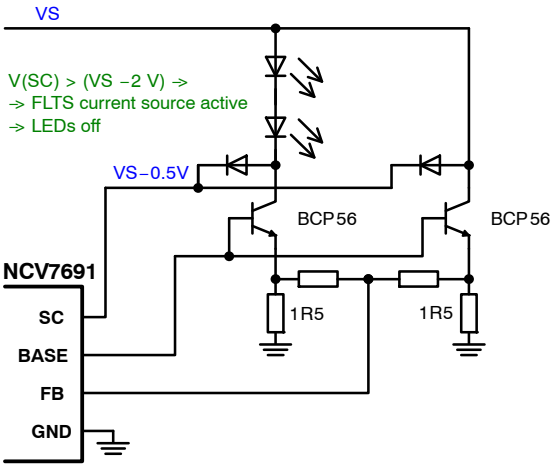

Figure 8. Short LED Detection Principle

Thermal Considerations of the Board

As the board dissipation is typ. 11 W at 13.8 V battery supply and 100 mA LED current, the thermal aspects should be taken into account for the board design. The main limitations are LED lifetime vs. operating temperature and NPN bipolar maximum junction temperature.

The board was designed to operate at full current with board temperature of up to 90°C on standard 70 µm FR4 PCB substrate and passive cooling without any extra thermal improvements. In case higher power dissipation is foreseen, a cooling metal profile may be mounted to the bottom side of the board.

Thermal Fold−back

To the protect power dissipating devices on the board (LEDs, NPN bipolar transistor), a circuit reducing LED current at high board temperatures is included (Figure 8).

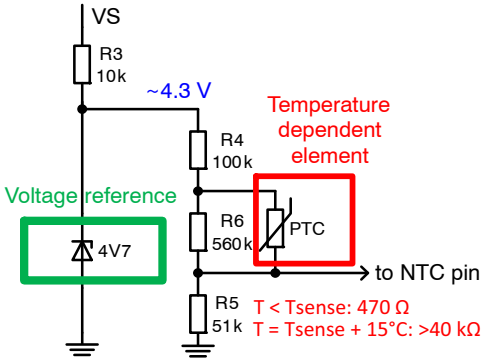

Figure 9. Thermal Fold−back Circuitry

The circuit consists of a voltage reference (ZD1 supplied via R3) and temperature dependent resistor divider. A thermistor with positive temperature dependency (PTC) is used for temperature sensing. For temperatures below the PTC sensing temperature, the thermistor has low resistance (typ. 470 Ω), so the circuitry output voltage is given by R4 and R5 while for high temperatures the reference voltage drops rapidly (Figure 9). R6 ensures the voltage on NTC input does not fall below the NTC Detection Level (max. 300 mV) at high temperature, which would result into a switch−over to the internal voltage reference of NCV7691.

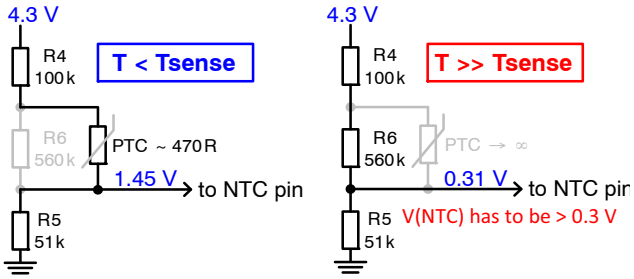

Figure 10. Thermal Fold−back Circuitry at Low/High Temperature

The optimal Zener voltage in terms of the temperature independency is usually between 4 and 5 V. At the same time, it should be as low as possible to allow a low−battery operation. 4V7 Zener diode is recommended as a good tradeoff. Because of lower bias current (< 1 mA) and impedance of the Zener, the reference voltage is lower than the nominal one (~4.3 V for 4V7 Zener) (Figure 10).

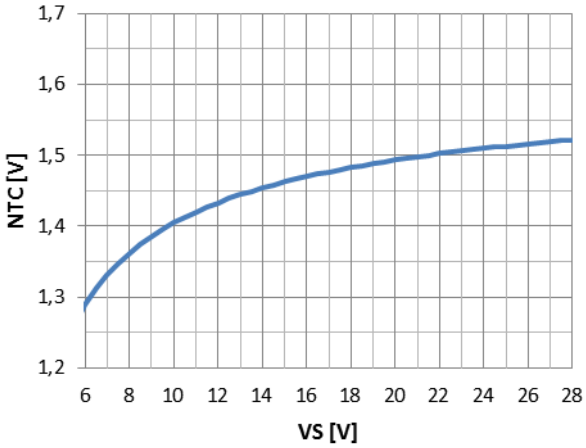

Figure 11. NTC Voltage vs. Supply Voltage (Tpcb = 25°C)

The sensing temperature (PTC parameter) has to be chosen carefully with respect to the heat distribution over the board and thermal properties of the power dissipating components. For PTC type B59641A95A62, the current fold−back reduces the reference voltage on the NTC pin and

thus LED current above the board temperature of ~90°C (Figure 11).

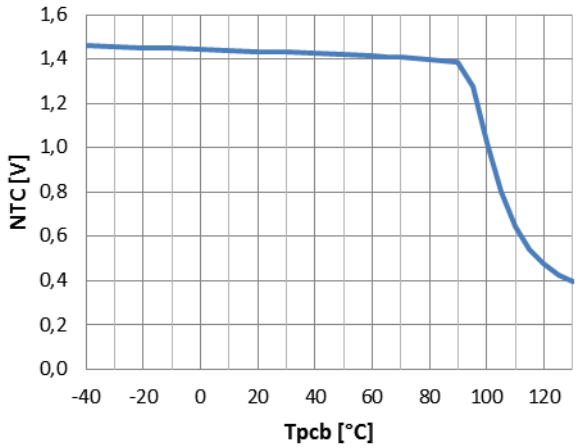

Figure 12. NTC Voltage vs. Board Temperature (VS = 12 V)

If the thermal fold−back feature is not required, components R3, R4, R6, ZD1 and PTC do not need to be assembled and NTC pin should be tied to GND (directly or via R5).

EMC recommendations

If extensive EMC immunity level is required, Cx1, C3 and C4 capacitors can improve the EMC performance. Using C3 is usually sufficient against disturbances from the supply line. Capacitors Cx1 and C4 may further improve the performance esp. in the setups with external (off−board) LEDs.

PCB DRAWINGS

Assembly Drawings

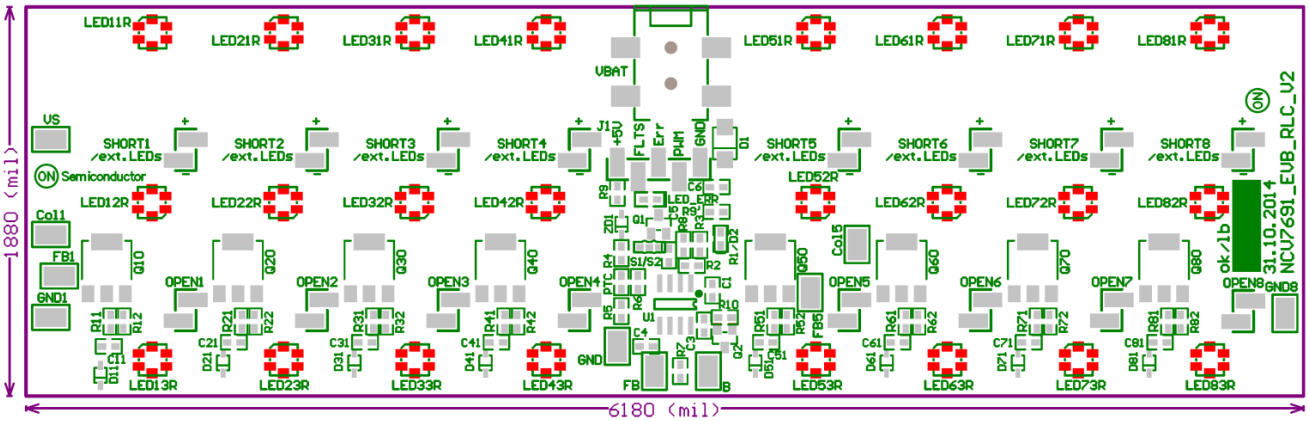

Figure 13. NCV7691 RCL EVB PCB Top Assembly Drawing (Red LEDs) Option A

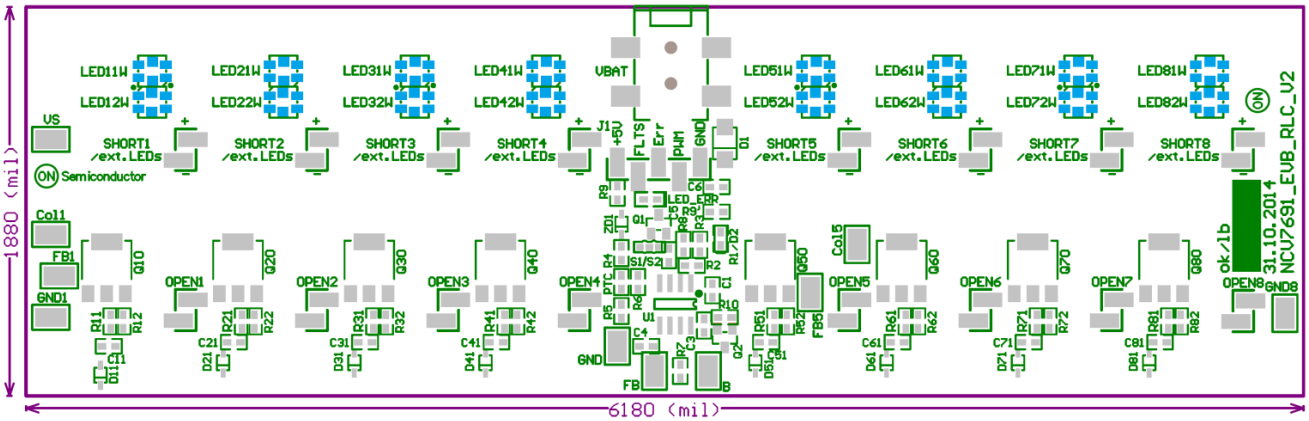

Figure 14. NCV7691 DRL EVB PCB Top Assembly Drawing (White LEDs) Option B

Composite Drawings

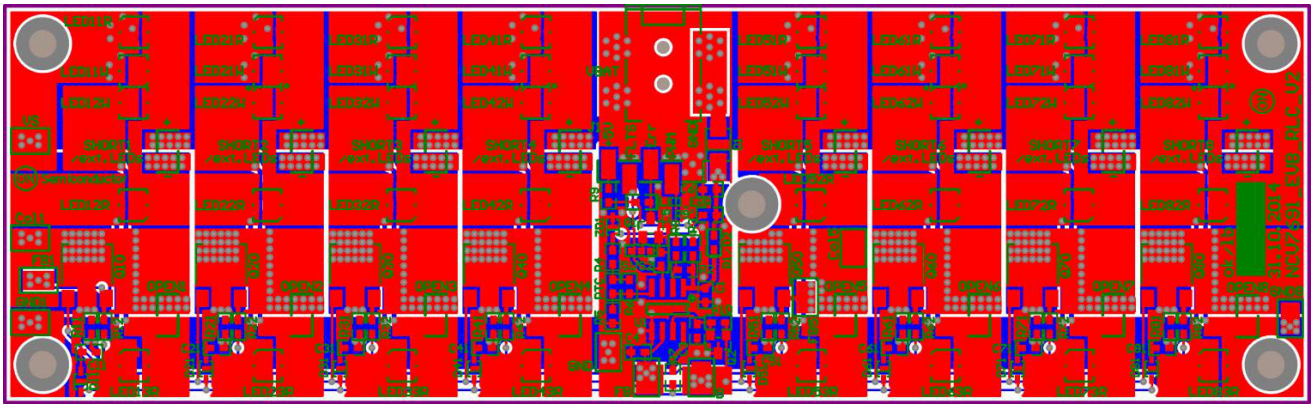

Figure 15. NCV7691 RCL/DRL EVB PCB Top Composite Drawing

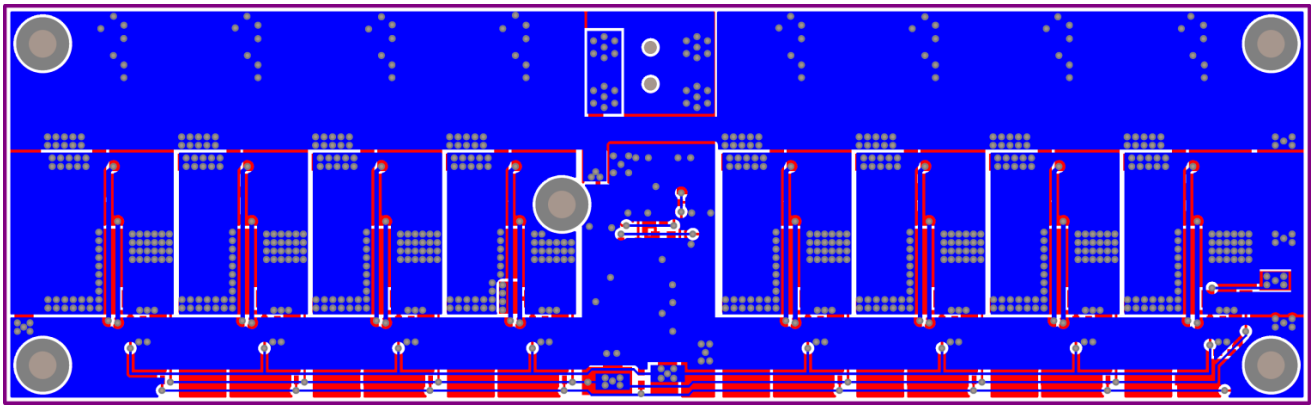

Figure 16. NCV7691 RCL/DRL EVB PCB Bottom Composite Drawing

REFERENCES

[1] ON Semiconductor, NCV7691 Product Datasheet Rev. 2, January 2015

[2] EPCOS, PTC thermistors as limit temperature sensors, Series: B59421, B59641, B59721, March 2014

[3] ON Semiconductor, BCP56 NPN Silicon Epitaxial Transistor, Rev. 10, March, 2014.

onsemi, onsemi, and other names, marks, and brands are registered and/or common law trademarks of Semiconductor Components Industries, LLC dba "**onsemi**" or its affiliates and/or subsidiaries in the United States and/or other countries. **onsemi** owns the rights to a number of patents, trademarks, copyrights, trade secrets, and other intellectual property. A listing of **onsemi**'s product/patent coverage may be accessed at www.onsemi.com/site/pdf/Patent−Marking.pdf. **onsemi** is an Equal Opportunity/Affirmative Action Employer. This literature is subject to all applicable copyright laws and is not for resale in any manner.

The evaluation board/kit (research and development board/kit) (hereinafter the "board") is not a finished product and is not available for sale to consumers. The board is only intended for research, development, demonstration and evaluation purposes and will only be used in laboratory/development areas by persons with an engineering/technical training and familiar with the risks associated with handling electrical/mechanical components, systems and subsystems. This person assumes full responsibility/liability for proper and safe handling. Any other use, resale or redistribution for any other purpose is strictly prohibited.

THE BOARD IS PROVIDED BY ONSEMI TO YOU "AS IS" AND WITHOUT ANY REPRESENTATIONS OR WARRANTIES WHATSOEVER. WITHOUT LIMITING THE FOREGOING, ONSEMI (AND ITS LICENSORS/SUPPLIERS) HEREBY DISCLAIMS ANY AND ALL REPRESENTATIONS AND WARRANTIES IN RELATION TO THE BOARD, ANY MODIFICATIONS, OR THIS AGREEMENT, WHETHER EXPRESS, IMPLIED, STATUTORY OR OTHERWISE, INCLUDING WITHOUT LIMITATION ANY AND ALL REPRESENTATIONS AND WARRANTIES OF MERCHANTABILITY, FITNESS FOR A PARTICULAR PURPOSE, TITLE, NON−INFRINGEMENT, AND THOSE ARISING FROM A COURSE OF DEALING, TRADE USAGE, TRADE CUSTOM OR TRADE PRACTICE.

onsemi reserves the right to make changes without further notice to any board.

You are responsible for determining whether the board will be suitable for your intended use or application or will achieve your intended results. Prior to using or distributing any systems that have been evaluated, designed or tested using the board, you agree to test and validate your design to confirm the functionality for your application. Any technical, applications or design information or advice, quality characterization, reliability data or other services provided by **onsemi** shall not constitute any representation or warranty by **onsemi**, and no additional obligations or liabilities shall arise from **onsemi** having provided such information or services.

onsemi products including the boards are not designed, intended, or authorized for use in life support systems, or any FDA Class 3 medical devices or medical devices with a similar or equivalent classification in a foreign jurisdiction, or any devices intended for implantation in the human body. You agree to indemnify, defend and hold harmless **onsemi**, its directors, officers, employees, representatives, agents, subsidiaries, affiliates, distributors, and assigns, against any and all liabilities, losses, costs, damages, judgments, and expenses, arising out of any claim, demand, investigation, lawsuit, regulatory action or cause of action arising out of or associated with any unauthorized use, even if such claim alleges that **onsemi** was negligent regarding the design or manufacture of any products and/or the board.

This evaluation board/kit does not fall within the scope of the European Union directives regarding electromagnetic compatibility, restricted substances (RoHS), recycling (WEEE), FCC, CE or UL, and may not meet the technical requirements of these or other related directives.

FCC WARNING − This evaluation board/kit is intended for use for engineering development, demonstration, or evaluation purposes only and is not considered by **onsemi** to be a finished end product fit for general consumer use. It may generate, use, or radiate radio frequency energy and has not been tested for compliance with the limits of computing devices pursuant to part 15 of FCC rules, which are designed to provide reasonable protection against radio frequency interference. Operation of this equipment may cause interference with radio communications, in which case the user shall be responsible, at its expense, to take whatever measures may be required to correct this interference.

onsemi does not convey any license under its patent rights nor the rights of others.

LIMITATIONS OF LIABILITY: **onsemi** shall not be liable for any special, consequential, incidental, indirect or punitive damages, including, but not limited to the costs of requalification, delay, loss of profits or goodwill, arising out of or in connection with the board, even if **onsemi** is advised of the possibility of such damages. In no event shall **onsemi**'s aggregate liability from any obligation arising out of or in connection with the board, under any theory of liability, exceed the purchase price paid for the board, if any.

The board is provided to you subject to the license and other terms per **onsemi**'s standard terms and conditions of sale. For more information and documentation, please visit www.onsemi.com.

ADDITIONAL INFORMATION

TECHNICAL PUBLICATIONS:
Technical Library: www.onsemi.com/design/resources/technical−documentation
onsemi Website: www.onsemi.com

ONLINE SUPPORT: www.onsemi.com/support
For additional information, please contact your local Sales Representative at www.onsemi.com/support/sales