MT9TV024IA7XTMH-GEVB

MT9V024 Evaluation Board User's Manual

ON Semiconductor®

www.onsemi.com

EVAL BOARD USER'S MANUAL

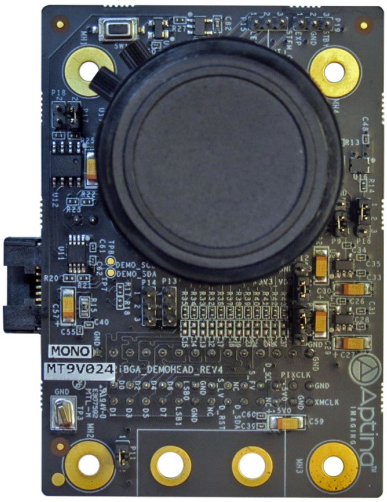

Figure 1. MT9V024 Evaluation Board

Evaluation Board Overview

The evaluation boards are designed to demonstrate the features of ON Semiconductor's image sensors products. This headboard is intended to plug directly into the Demo 2X system. Test points and jumpers on the board provide access to clock, I/Os and other miscellaneous signals.

Features

- Clock Input
  - Default – 27 MHz crystal oscillator
  - Optional Demo 2X controlled MClk
- Two Wire Serial Interface
  - Selectable base address
- Parallel Interface
- Serial LVDS Interface
- ROHS Compliant

Block Diagram

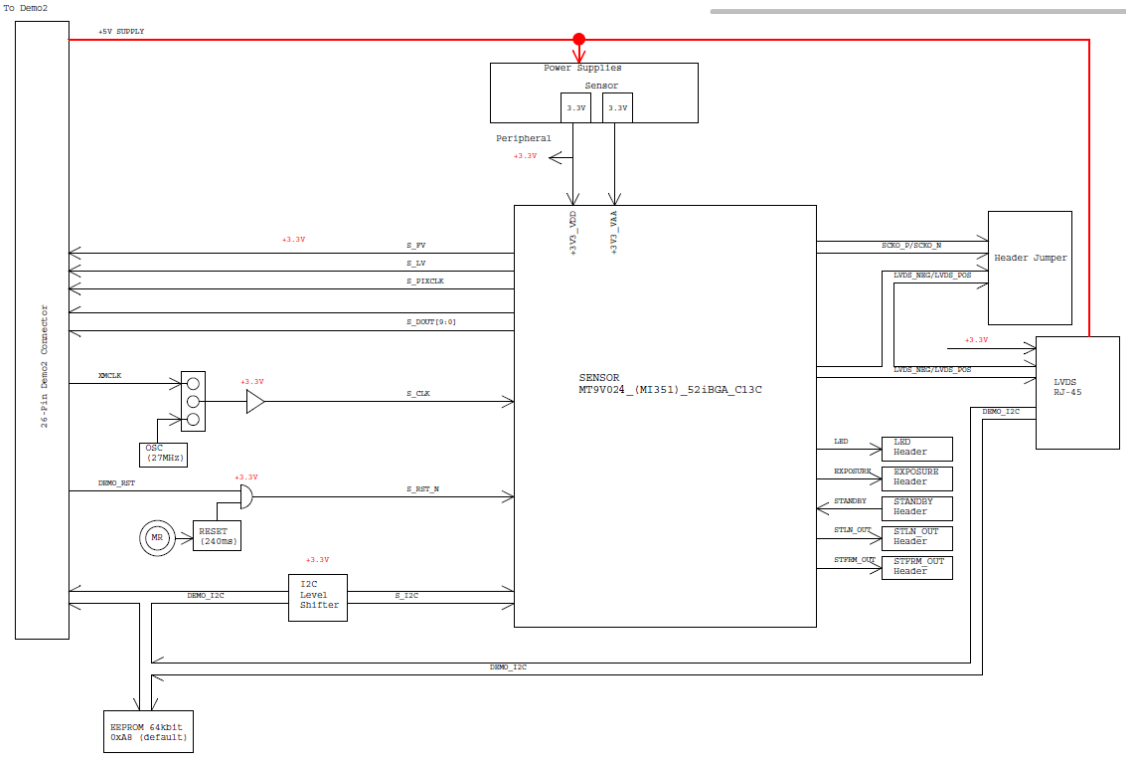

Figure 2. Block Diagram of MT9V024IA7XTMH−GEVB

July, 2016 − Rev. 0

Publication Order Number:
EVBUM2456/D

Top View

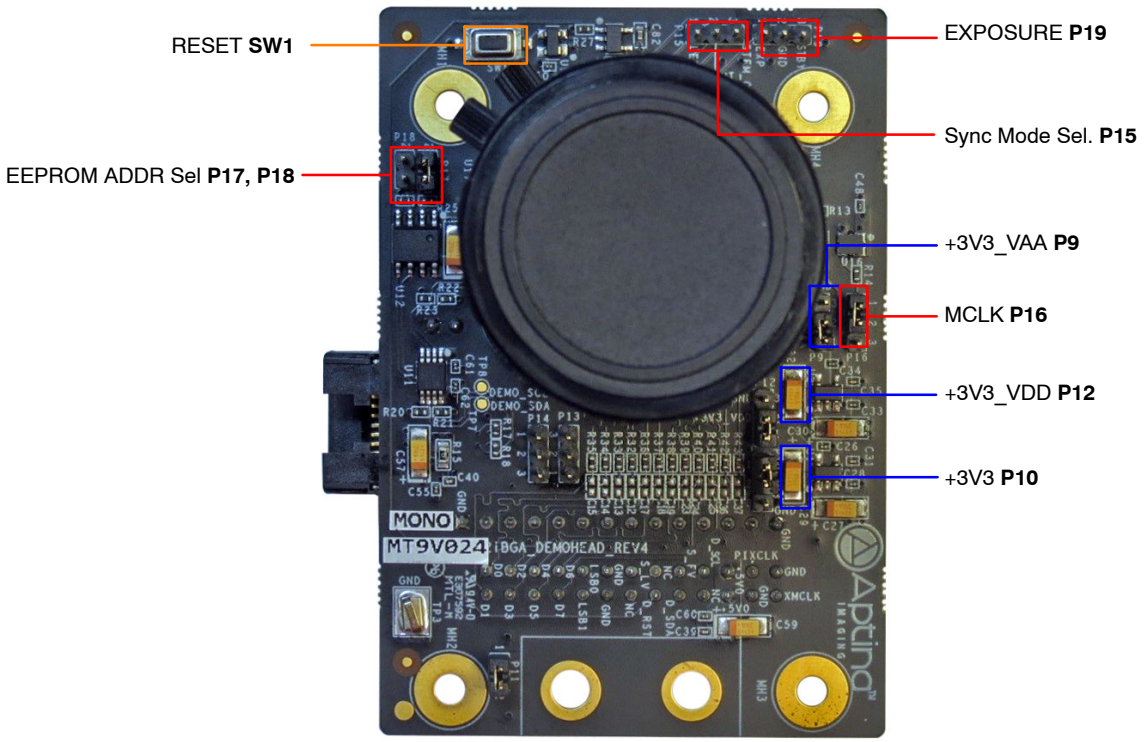

Figure 3. Top View of Evaluation Board − Default Jumpers

Bottom View

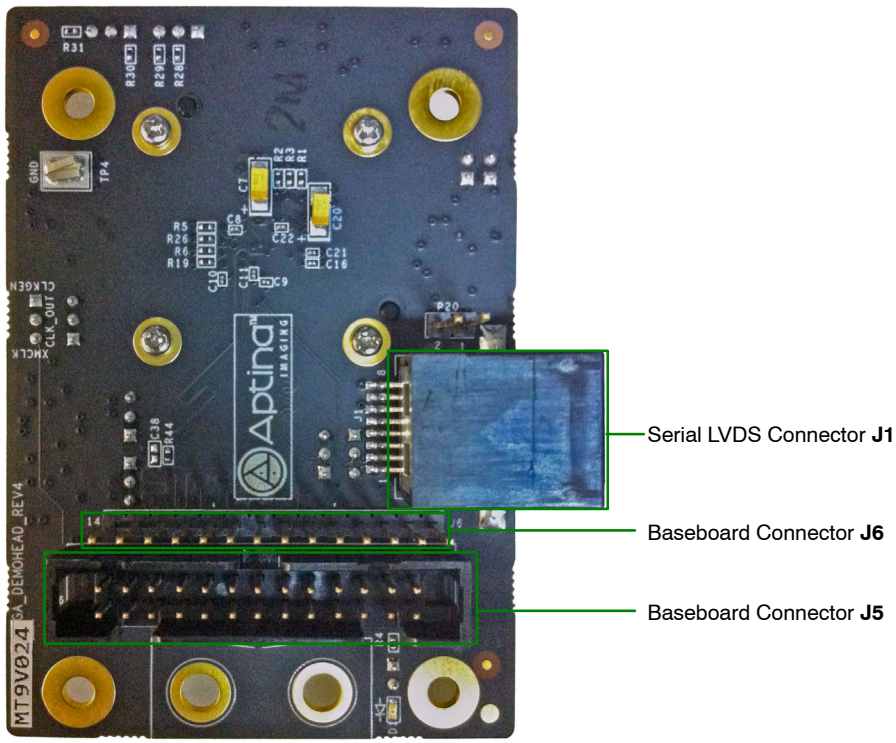

Figure 4. Bottom View of the Evaluation Board − Connector

Jumper Pin Locations

The jumpers on headboards start with Pin 1 on the leftmost side of the pin. Grouped jumpers increase in pin size with each jumper added.

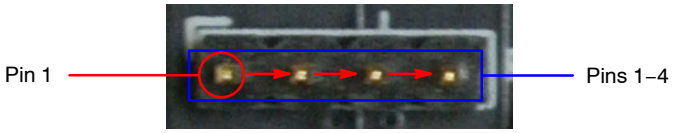

Figure 5. Pin Locations for a Single Jumper. Pin 1 is Located at the Leftmost Side and Increases as it Moves to the Right

Jumper/Header Functions & Default Positions

Table 1. JUMPERS AND HEADERS

Jumper/Header No.	Jumper/Header Name	Pins	Description
J1	Config.	Open (Default)	Connects to various sensor's settings
J3	EXTCLK	Open (Default)	For connection to external clock
SW1	CLK_SELECT	Position 1 (Default)	Connects to on-board 27 MHz oscillator
		Position 2	Connects to on-board 27 MHz oscillator
		Position 3	Connects to EXTCLK from J3
SW2	RESET	N/A	When pushed, 400 ms reset signal will be sent to MT9V022

Interfacing to ON Semiconductor Demo 2X Baseboard

The ON Semiconductor Demo 2X baseboard has a similar 26-pin and 14-pin connector which mate with J5 and J6 of the headboard. The four mounting holes secure the baseboard and the headboard with spacers and screws.

Shorted Jumpers for Power Measurement

Different supplies to the evaluation board are provided by trace shorted jumper, for any voltage and power measurements. To conduct current for current measurement on a given power rail, cut the trace between the two pins of their respective JP, and insert an ammeter prior to powering up the system. The figure below shows where the trace to cut is located.

Table 2. SHORTED JUMPERS FOR POWER MEASUREMENTS

Jumper	Voltage (V)
P1 (+3V3_VAA)	3.3
P2 (+3V3_VDD)	3.3

Figure 6. Top and Bottom View of Shorted Jumper. The Bottom View Shows the Trace Location to Cut for Current Measurement

ADDITIONAL INFORMATION

TECHNICAL PUBLICATIONS:
Technical Library: www.onsemi.com/design/resources/technical−documentation
onsemi Website: www.onsemi.com

ONLINE SUPPORT: www.onsemi.com/support
For additional information, please contact your local Sales Representative at www.onsemi.com/support/sales