# EVBUM2516/D

# 150 W High Power Density Adapter Using SJ Si MOSFETs Evolution Board User Manual

ON Semiconductor®

www.onsemi.com

## EVAL BOARD USER'S MANUAL

### Contents

This evaluation board user manual describes the 150 W High Power Density Adapter and its main parameters like efficiency, no−load input power consumption, EMI signature, transient responses, etc. The evaluation board is dedicated to present ON Semiconductor's high performance controllers. High Power Density design is enabled when using these controllers and higher switching frequency. Higher efficiency can be achieved by using GaN HEMT devices instead of Silicon Super−junction MOSFETs.

The evaluation board comprising of the PFC boost converter operated in the critical conduction mode (CrCM) and LLC power stage. The PFC front stage is driven by NCP1615, assures unity power factor and low input current THD. The LLC stage operates @ 260 to 300 kHz @ nominal load and it's managed by the NCP1399 high performance current mode LLC controller. Super−junction Si MOSFETs (like FCMT199N60) can be assembled as primary side power switches. The CV/CC controller NCP4353A ensures output voltage regulation.

Above mentioned controllers are placed on the Control Module. Secondary side utilizes synchronous rectifier (SR) from NCP4305 or NCP4306 family composed with NVMFS5C645NL 4mΩ 60V Power MOSFET. Whole SR stage is implemented on the daughter card for easier main power board PCB design. The discrete or integrated LLC resonant thanks implementations can be used in one board with few changes thanks to universal design.

This evaluation board manual focuses mainly on short description of adapter operation principles and connections. For more detailed information please refer to datasheets of individual part.

### Key Features

- Wide Input Voltage Range
- High Power Density, High Efficiency
- Low No−load Power Consumption
- X2 Capacitor Discharge Function
- Near Unity Power Factor
- Overload Protection, Thermal Protection
- Low Mains Operation Protection
- Secondary Short Circuit Protected
- Regulated Output Under any Conditions
- Capability to Implement Off−mode for

**Table 1. GENERAL PARAMETERS**

| Device | Applications | Input Voltage | Normal Output Voltage / Current | Output Power | $V_{OUT}$ Ripple |
|---|---|---|---|---|---|
| NCP1615<br>NCP1399<br>NCP4305<br>NCP4353 | Notebook Adaptors,<br>Ac – dc converters for consumer electronics | 90 – 265 Vac | 19 Vdc / 8 A<br>9 A max limit | 150 W | < 250 mV @ Full load |
| **Efficiency** | **Standby Power** | **Operating Temperature** | **Cooling** | **Topology** | **Board size** |
| Up to 94.15% | 150 mW @ 230 Vac | 0 – 50 °C | Passive cooling | PFC CrCM<br>LLC + SR | 116 x 55 x 18 mm |

© Semiconductor Components Industries, LLC, 2016

October, 2017 − Rev. 6

Publication Order Number:
EVBUM2516/D

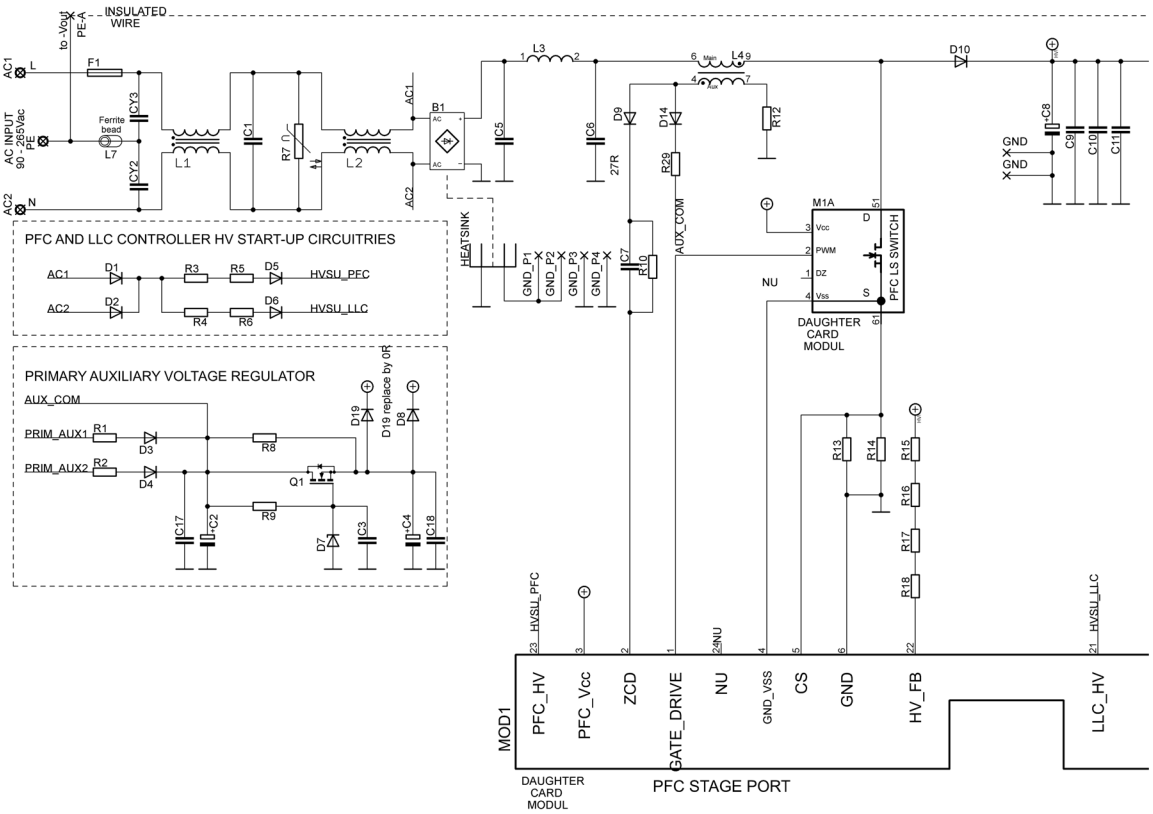


**Figure 1. 150 W High Power Density Adapter − Schematic Of The Power−Board (1/2)**

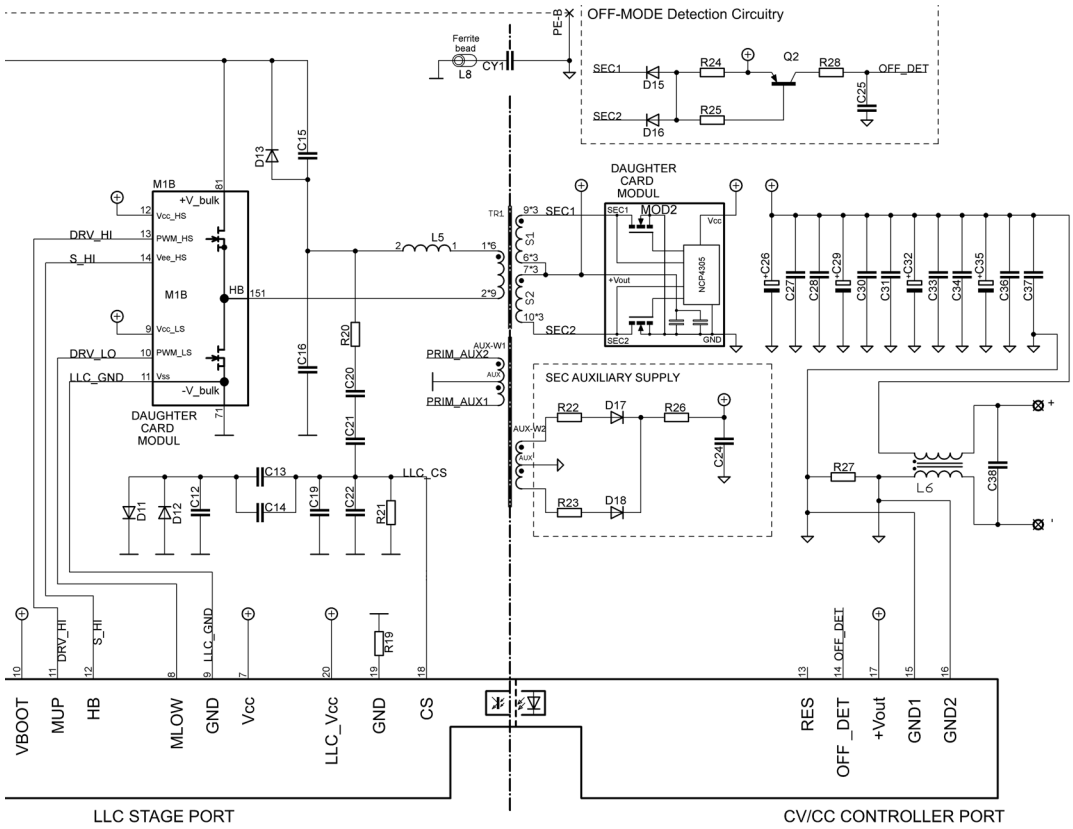


**Figure 2. 150 W High Power Density Adapter − Schematic Of The Power−Board (2/2)**

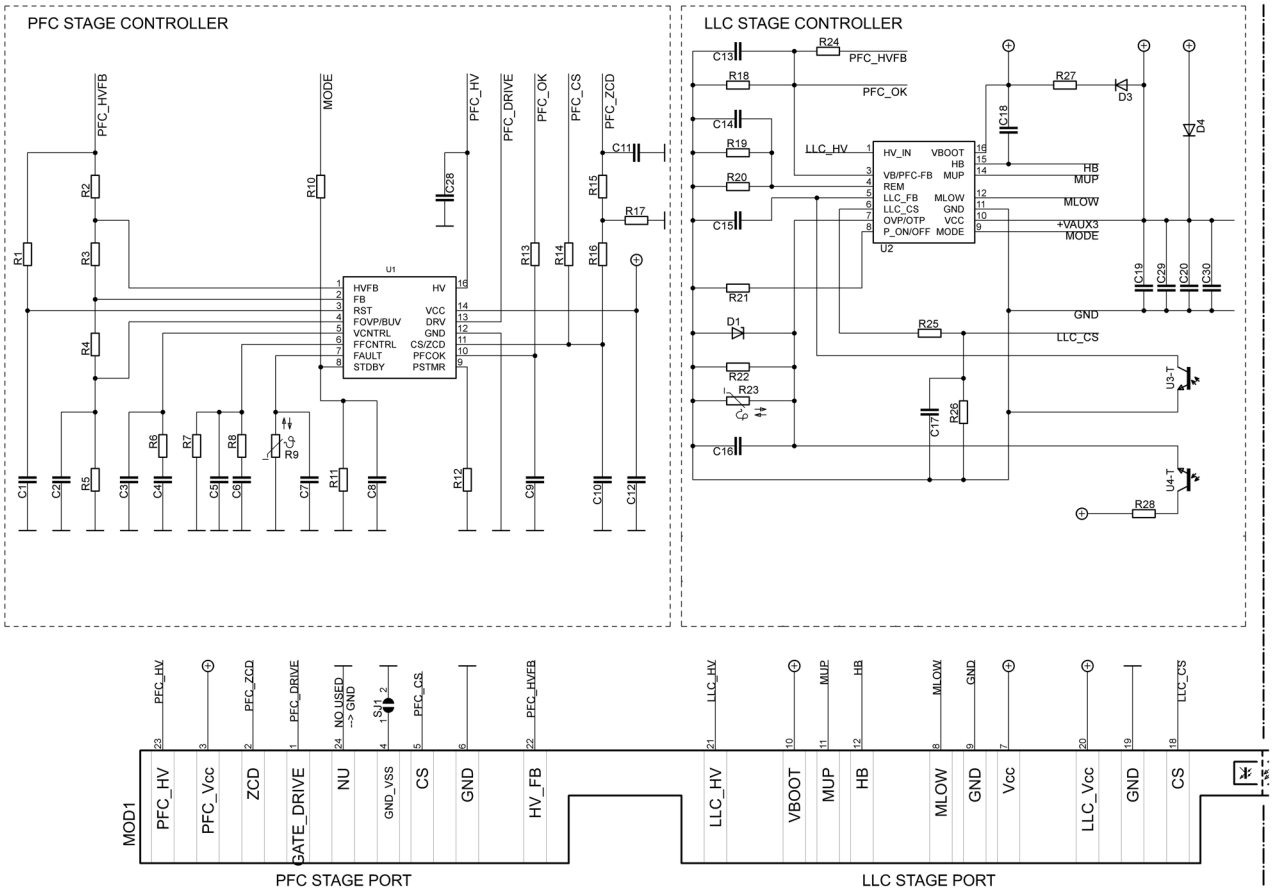


**Figure 3. High Power Density Adapter − Schematic Of The Control Module 1/2**

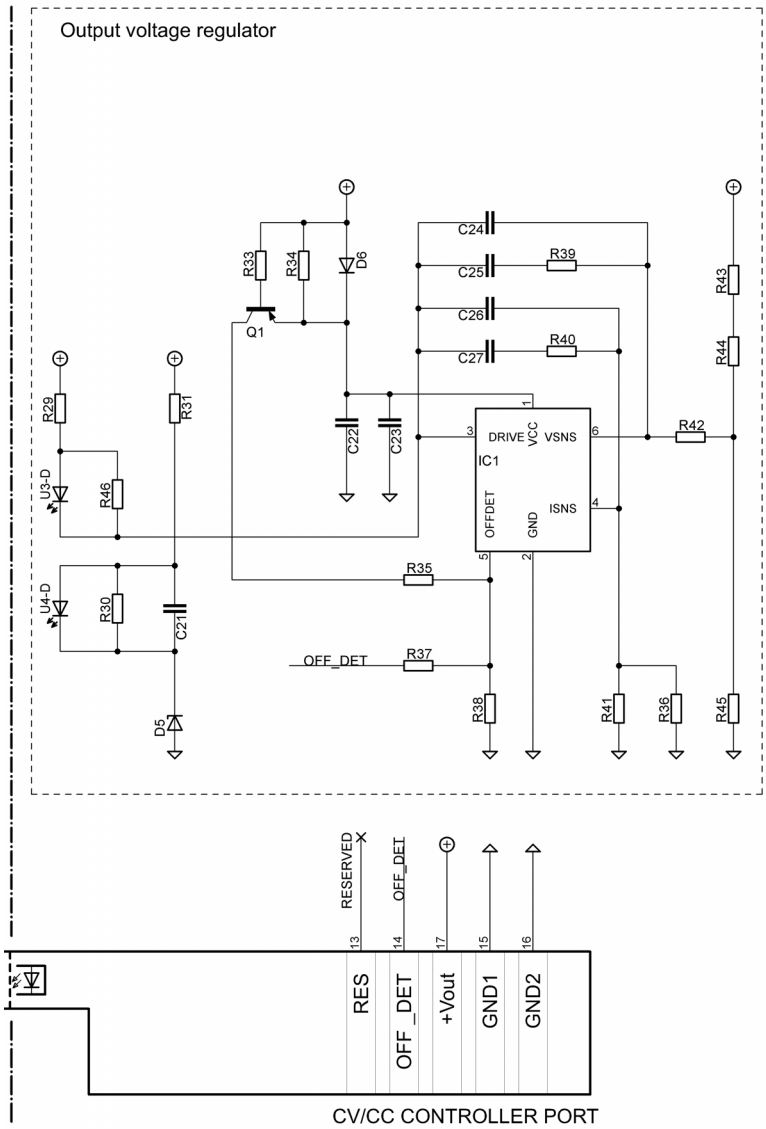


**Figure 4. High Power Density Adapter – Schematic Of The Control Module 2/2**

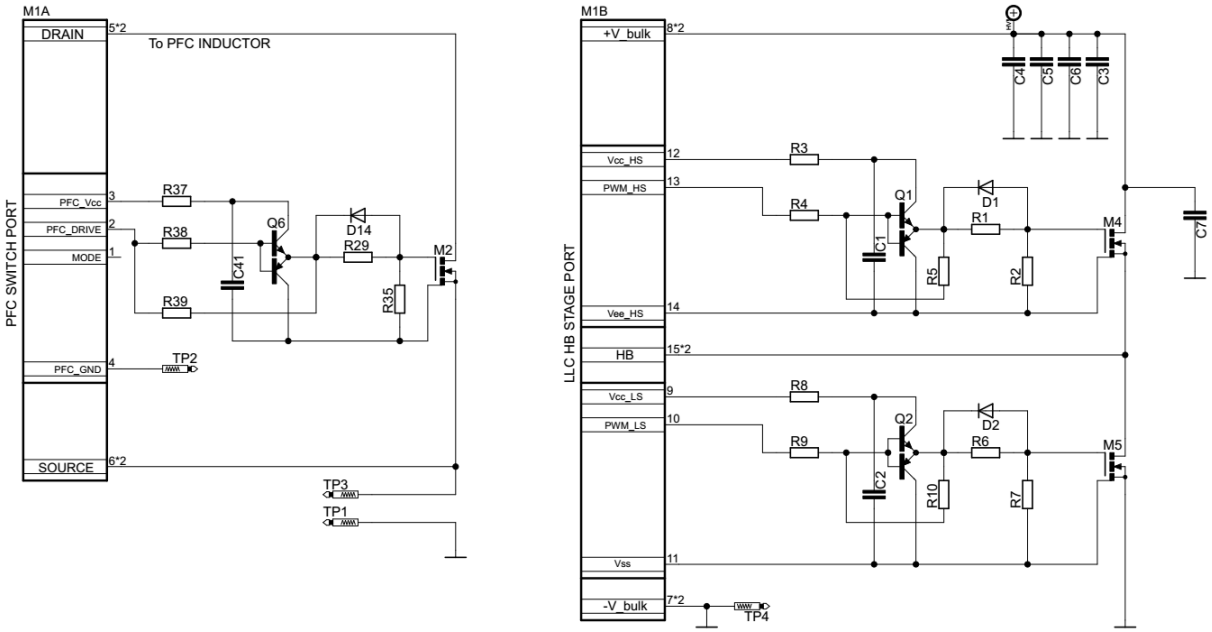


**Figure 5. 150 W High Power Density Adapter − Schematic Of The Switch Module With Si MOSFETs**

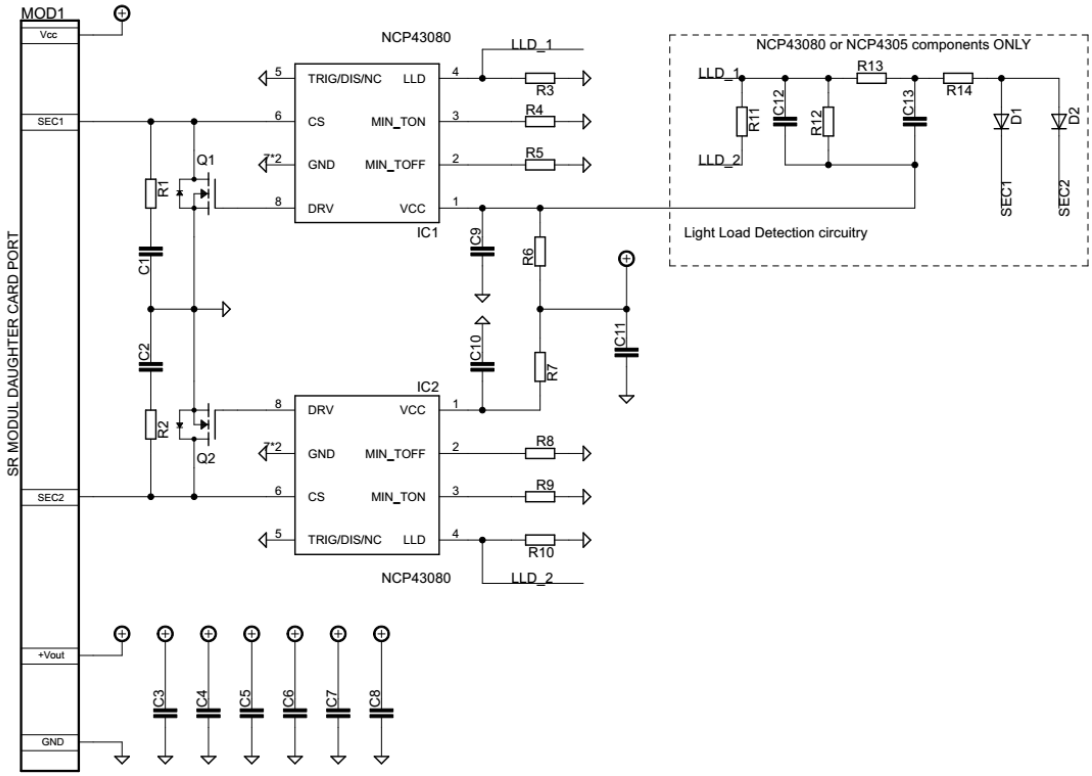


**Figure 6. 150 W High Power Density Adapter − Schematic of Synchronous Rectifier Module**

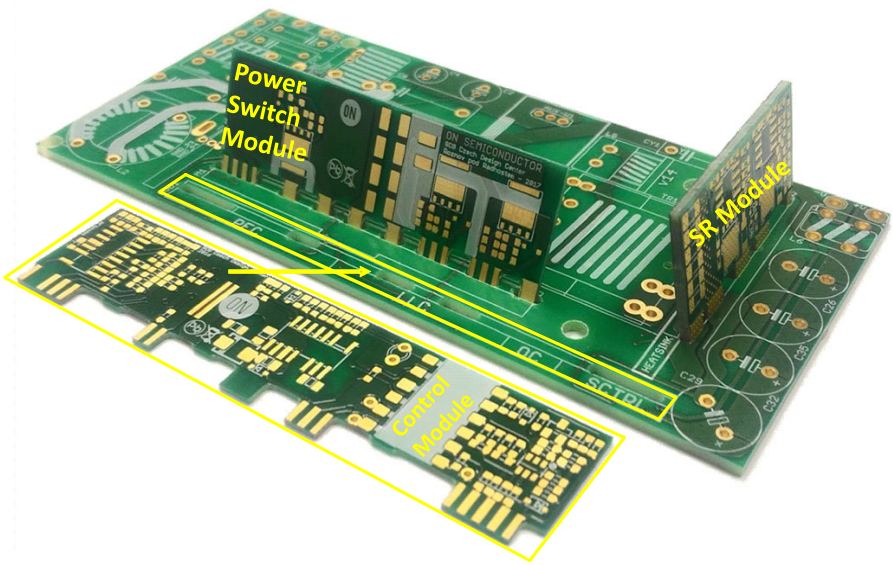


**Figure 7. 150 W High Power Density Adapter – Arrangement Of Modules**

## DETAILED DESCRIPTIONS OF THE EVALUATION BOARD

**Adapter modular conceptions** – The demo−board is constructed using a main power board plus daughtercards or modules, which are showed in Figure 7. This assists evaluation and allows the user to exchange daughtercards for experimentation. This comprehensive type of construction helps to reduce PCB area, thus increases power density and also allows reducing number of PCB layers. All modules PCBs are designed as 2−layers with 35um or 70um thin copper plating. PCBs with 70um copper plating are used for SR and Power Switch Modules. The lowest PCB manufacturing and assembly cost has been achieved thanks to this construction.

**The input of the converter** is protected by the varistor R7. A differential mode lighting surge protection has not been optimized. The fuse F1 is 4A time−lag type fuse to withstand the inrush current. The inrush current limiting NTC thermistor is not used in this demo−board (Figure NO TAG.)

**The EMI filter** consists from the common−mode power line chokes L1 and L2, X2−capacitor C1, and three Y−capacitors CY1 – CY3. CY1 is complemented with ferrite beads L6 at one terminal. The center of CY2 and CY3 capacitors is connected to the PE terminal through ferrite bead L7. The PE−A terminal should be connected to the PE−B terminal by a wire to reduce EMI signature. Pre−filter arranged by polypropylene capacitors C5, C6 and differential mode inductor L3 (Figure NO TAG.) is used for further reduction of EMI signature.

**The HV Start−up and X2 discharge capability** – both primary controllers are equipped with High Voltage Start−up current sources (NCP1615, NCP1399). PFC High−voltage Start−up (HVSU) is assured via serial circuit R3, R5, D5, and two diodes D1 and D2. Diodes are shared for PFC and LLC HVSU. LLC HVSU is joined through same serial circuit R4, R6 and D6. To avoid influence between controllers, HV pin of both controllers are separated via mentioned serial circuitries.

Additionally for NCP1615 – the PFC controller has X2 discharge function. The X2−capacitor is discharged after disconnecting power cord from the line.

**The PFC front stage** implements critical conduction mode PFC boost converter and consists mainly the bulk capacitor C8, which is decoupled at high frequencies (HF) with multi−layer ceramic capacitors (MLCC) C9−11, PFC inductor L4, rectifying diode D10 and power switch (Figure NO TAG.), which is located on Power Switch Module (Figure 5.). The PFC controller NCP1615 senses inductor current directly as a voltage drop on resistors R13, R14. These resistors are connected directly to Control Module, where the PFC controller is located. These resistors define maximum PFC front stage peak current. The PFC controller U1 (NCP1615) uses CS/ZCD for inductor peak current sensing and zero current condition or valley detection. Zero current detection is guaranteed by PFC coil auxiliary winding voltage, which is rectified with D9 and this signal is connected to Control Module via parallel RC circuit R10 and C7. Input voltage is observed at HV pin, which also serves for input voltage sensing and BROWN−OUT protection. The bulk capacitor voltage is fed into PFC controller through set of four resistors R15, R16, R17 and R18. Necessary PFC compensation circuitries and components are located on the Control Module board. The PFC OK status is transferred via network of C9, R13, C13 and R18 to LLC controller, which is subsequently enabled after PFC provides PFC OK status. For more details, please refer to NCP1615 datasheet.

**Power Switch Module** with Si SJ MOSFETs is showed in Figures 5, 15, 16. Power Switch Module consists of power

FET devices and additional components which are necessary for correct operation.

Power Switch Module is designed for Silicon Power MOFETs in small SMD package so−called the Power88. In Figure 6 is Power Switch module schematic, where M2 is the low side switch of PFC front stage, M4 and M5 create LLC half−bridge stage. C3, C4, C5, C6 and C7 are HF decoupling MLCC capacitors with same function as afore mentioned. Q1, Q2, Q6 forms emitter followers with Vcc decoupling capacitors C1, C2 and C41. Emitter followers provide buffering of driving signal in case of need – they can be assembled on purpose. Paralleled resistor−diode pairs (D14–R29, D1–R1, D2–R6) set switching slopes of MOSFETs and this way improving EMI signature.

**Exchange of Power Switch Modules Important notes** – Power Switch Modules can be exchanged, but specific conditions must be satisfied due to operation differences:

Silicon MOSFETs requirements:

- Higher magnetizing current (compare to GaN) to achieve ZVS → Lower magnetizing inductance because of higher output capacitance
- Maximum needed Dead−time up to 500ns
- Maximum switching Frequency is limited from to 420 – 450kHz @Light−load – it is given by used MOSFET parameters
- Dedicated NCP1399 setting is needed for Si MOSFETs board option

GaN FETs requirements:

- Lower magnetizing current (compare to Si MOSFETs) to achieve ZVS → Higher magnetizing inductance, less conduction losses
- Maximum needed Dead−time ~200ns
- Frequency is limited by IC controller
- Dedicated NCP1399 setting is needed for GaN MOSFETs board option

To summarize: the LLC controller has to be replaced and air gap in the LLC transformer increased when Switching Module is changed from GaN to → Si type.

**Control Module** – (Figures NO TAG, NO TAG, 13, 14) integrates the PFC controller NCP1615, the LLC controller NCP1399 and secondary side CV/CC controller NCP4353 in one PCB. Control module is designed in such a way, that each component is placed to its dedicated controller as close as possible. Another design strategy was to move all signal processing components to the Control Module, except the high voltage circuitries for example bulk voltage feedback divider. Module also contains two optocouplers, first one output is used for voltage feedback loop. IC1 – NCP4353 (Figure NO TAG) senses output voltage using resistor divider R43, R44 and R45 and transfers this information via optocoupler U3 to primary side, to the U2 – NCP1399, which regulates switching frequency according to feedback and current sense signals. Second optocoupler is dedicated to output overvoltage protection (OVP). As soon as output voltage reaches ~21V, optocoupler U4 pulls up OVP/OTP pin of U2 and activates OVP. Output OVP level and response is defined by zener diode D5, resistors R30, R31 and capacitor C21.

**The LLC primary stage** is formed by half−bridge, which is located on the Power switch Module, split resonant tank capacitors C15−C16, clamping diode D13, resonant inductor L5 (in case of discrete resonant transformer implementation) and transformer TR1. The resonant capacitor voltage divided down by R20, R21, C12, C13, C14, C19, C20, C21, C22, D11 and D12 and provides information about transformer current for NCP1399. Divider serves as current feedback loop and also sets adapter output current limit.

**The Synchronous Rectifier Module** (Figures 6, 17, 18) consists of two Single N−Channel SO−8FL Logic Level 60V MOSFETs Q1 and Q2, two synchronous rectifier (SR) controllers IC1−2 NCP43080 (or similar part from NCP430x family) and HF decoupling MLCC capacitors C3−8. RC snubber circuits, composed as R1−C1 and R2−C2, are connected across the drain and the source of each MOSFET, to protect them against voltage spikes. C9−11 and R6−7 are components use to filtering and HF decoupling supply voltage for both SR controllers. R4 (R9) and R5 (R8) serve to set minimum ON and minimum OFF switching times of SR controller. Automatic Light Load and Disable mode (LLD pin) is input modulates the driver clamp level and/or turns the driver off during light load conditions. This feature helps to reduce No−load consumption and improves Light−load efficiency. In Figure 6, the Light−Load Detection Circuitry is formed by resistors R11–14, ceramic capacitors C12, C13 and diodes D1−2. If there is a certain reason to not use LLD feature, use R3 (R10) zero ohms to disable it. Then in this situation Light−Load Detection Circuitry doesn't have to be assembled. When using NCP4306, R3 (R10) resistors can set specific timing of Automatic LLD or disable it fully and external Light−Load Detection Circuitry is not needed anymore. For more detail please see each device specific datasheet.

**The regulation of output voltage** is ensured by the regulator IC1–NCP4353 (see Figure NO TAG), which provides integrated voltage feedback regulation, replacing traditional shunt regulator. The device is capable of detecting "no−load" conditions and inserts the power supply into a low consumption OFF−mode. IC1 also includes a current regulation loop in addition to voltage regulation. These possibilities are included in design of PCBs, but demo−board is not utilized them. The optocoupler U3 is driven via resistor R29, which determines the feedback loop gain. Resistor R46 biases the NCP4353 in case that there is no current flowing through the optocoupler U3. The voltage feedback loop compensation network is created by resistors R39, R42 capacitors C24, C25. The value of output voltage is set up by voltage divider comprised of resistors R43, R44, R45.

**Coupling between primary and secondary** is ensured by the Y−capacitor CY1, which is connected between secondary ground and primary bulk voltage. Similar functionality have CY2 and CY3, which are placed between input terminals (L, N) and their center point is connected to PE earth terminal. PE−A and PE−B allow making the connection between secondary ground GND and input earth terminal (PE). The connection should be made by awg 18 or 0.75 $mm^2$ wire with optionally threaded ferrite bead.

This configuration of CY1−3 helps to improve the EMI signature of the converter and pass legislation EMI emission limits.

### PBC Layout

The PCB is made as a double layer FR4 board with 35μm copper cladding.

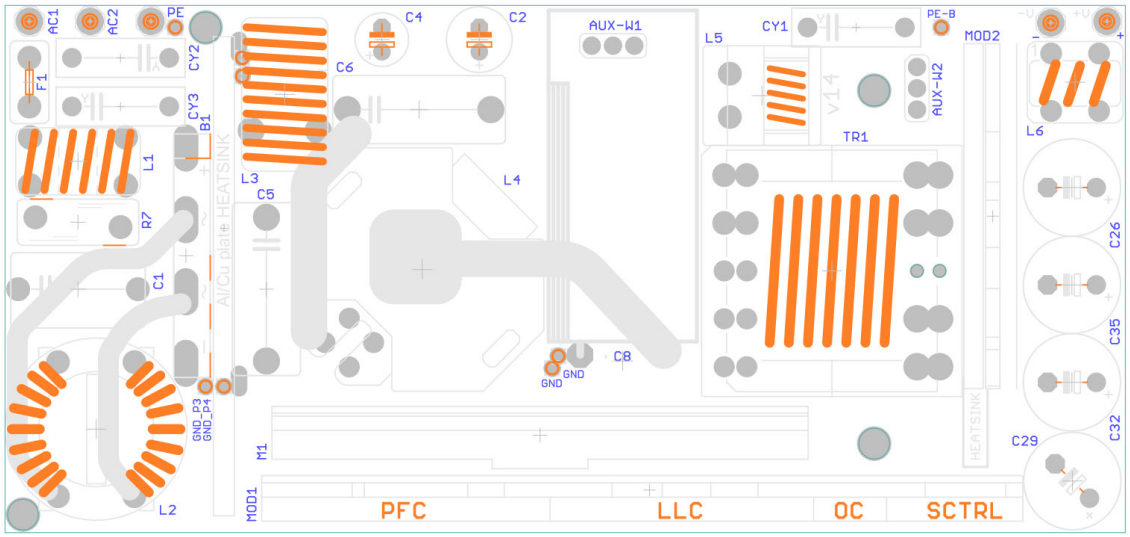


**Figure 8. Evaluation Board − Top Side Components**

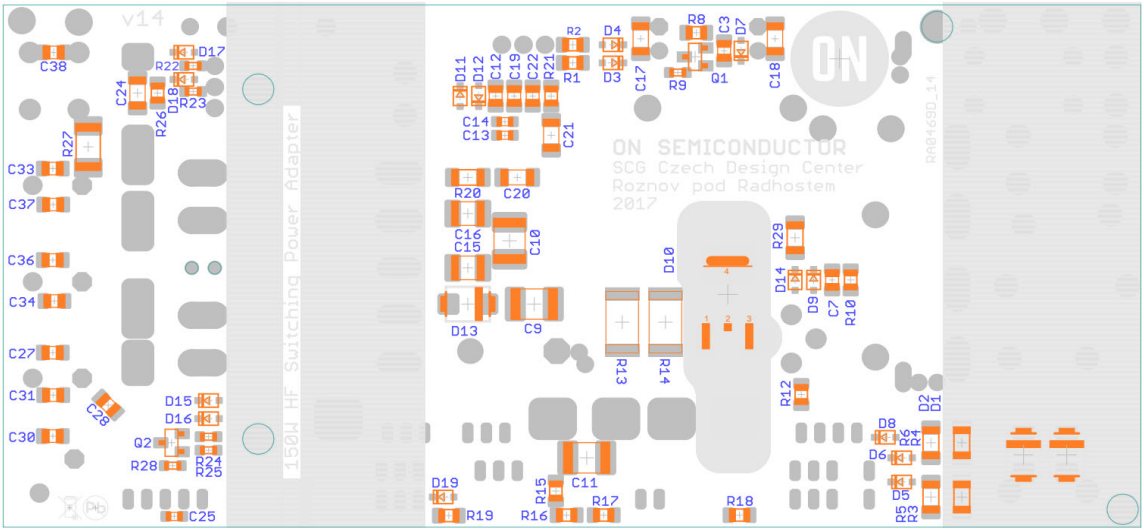


**Figure 9. Evaluation Board − Bottom Side Components**

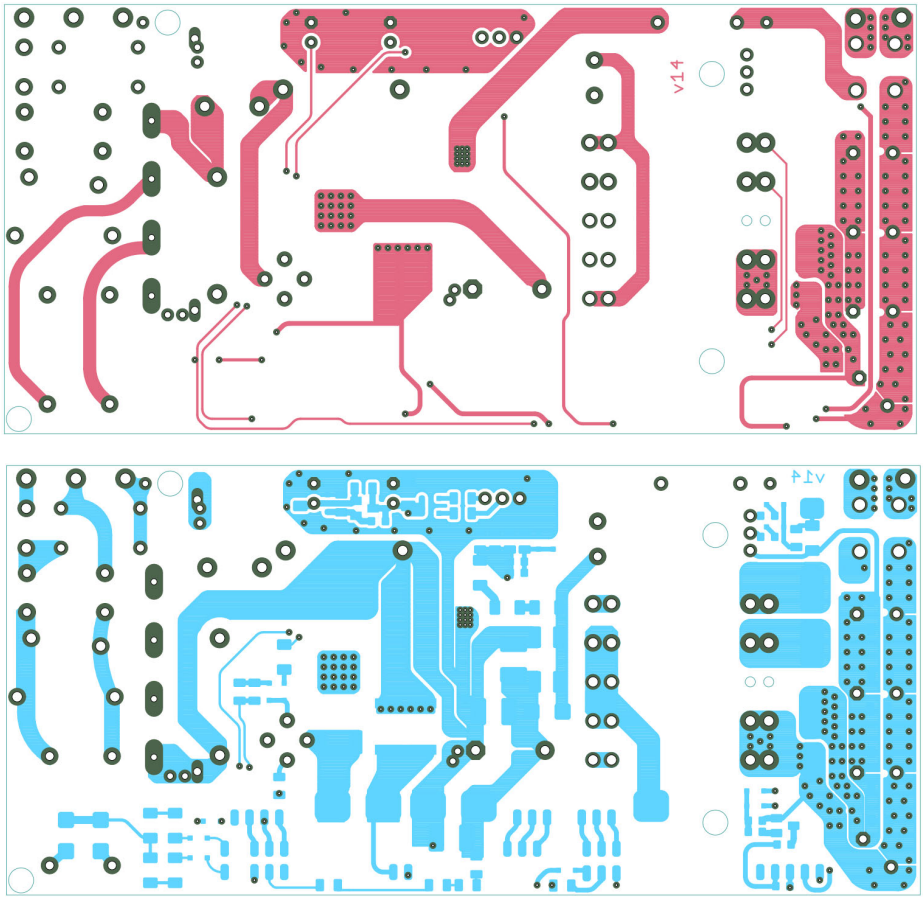


Figure 10. Evaluation Board – Top Layer Red, Bottom Layer Blue

Figure 11. Evolution Board Photograph – Bottom Side

**Figure 12. Evolution Board Photograph – Top View**

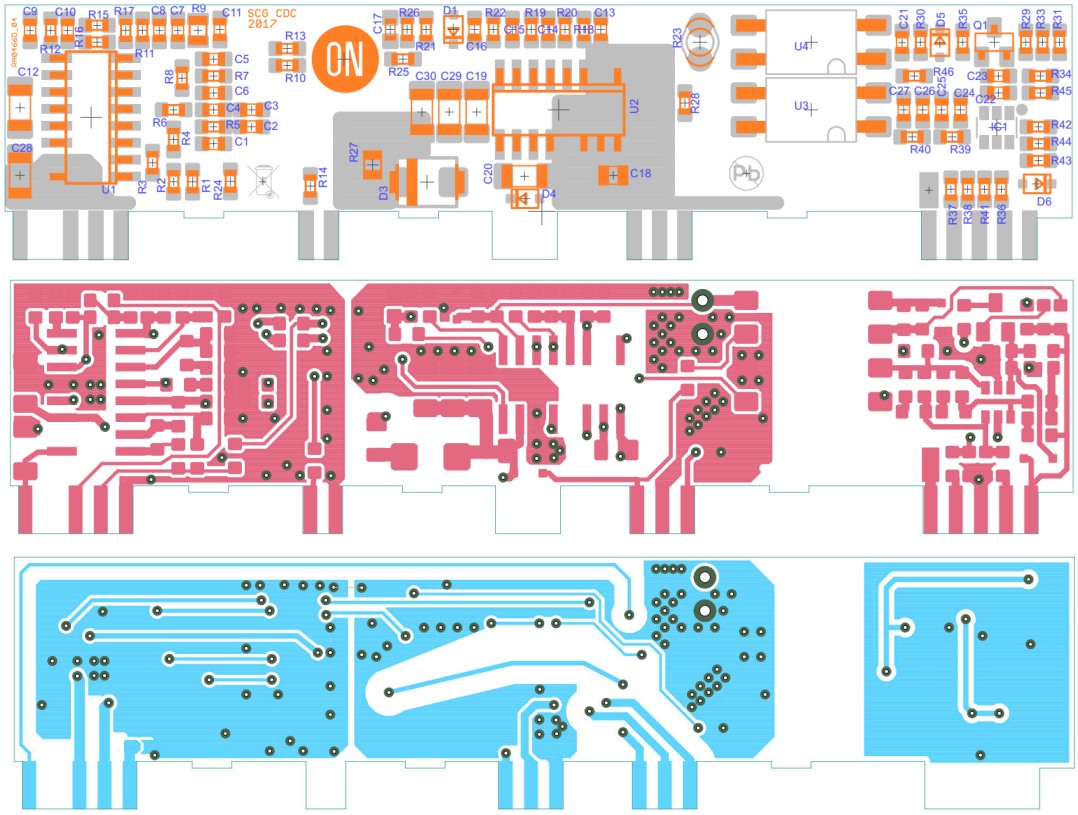


**Figure 13. Control Module – Top Side Components, Top Layer – Red, Bottom Layer – Blue**

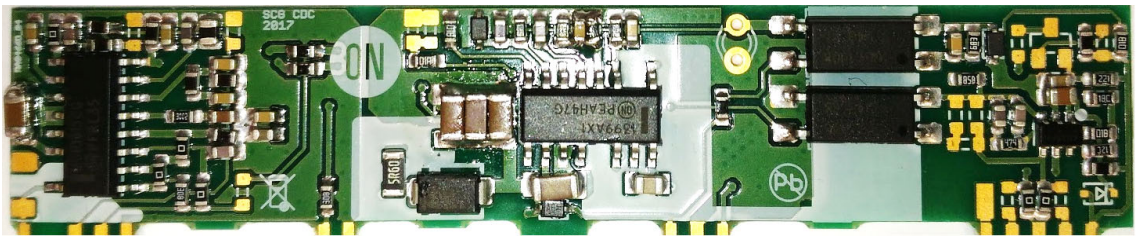

Figure 14. Control Module Photograph

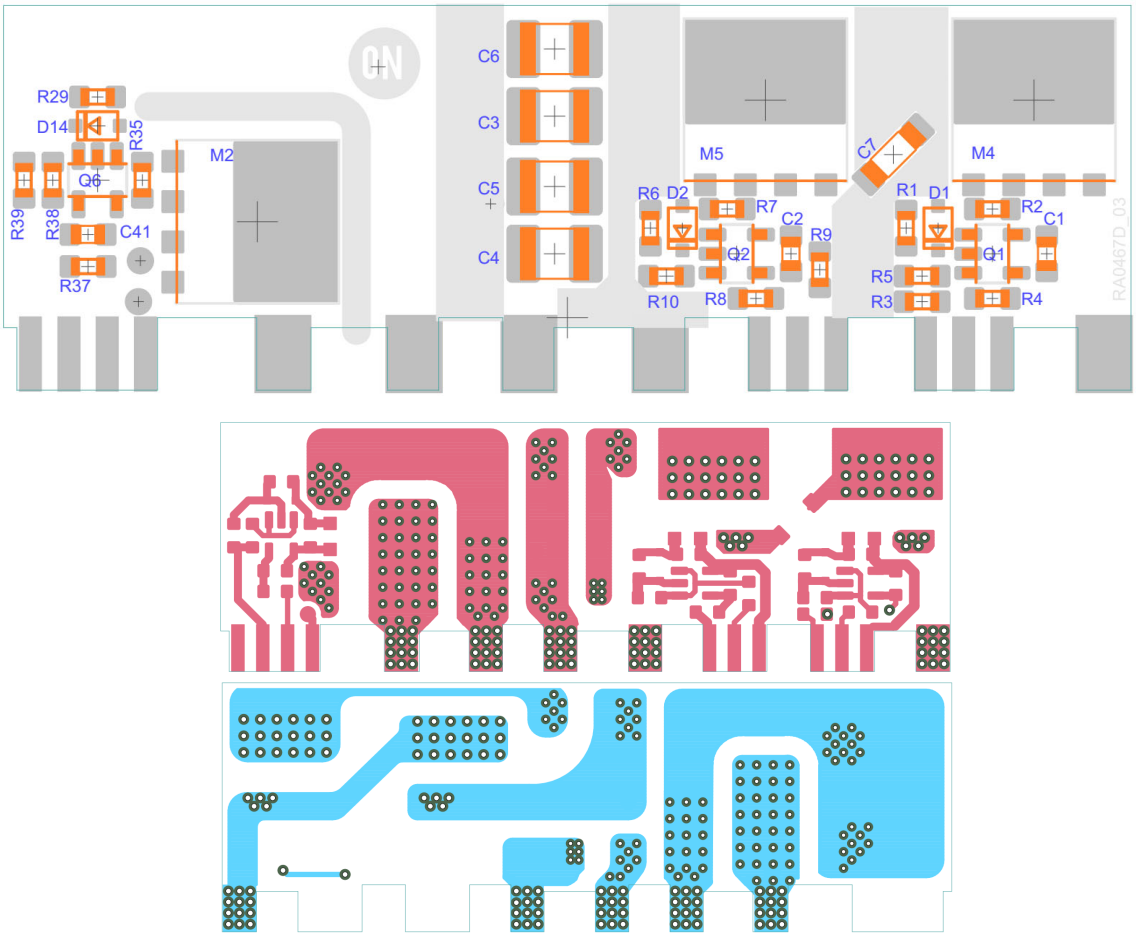


Figure 15. Power Switch Module, Top Side Components, Top Layer – Red, Bottom Layer – Blue

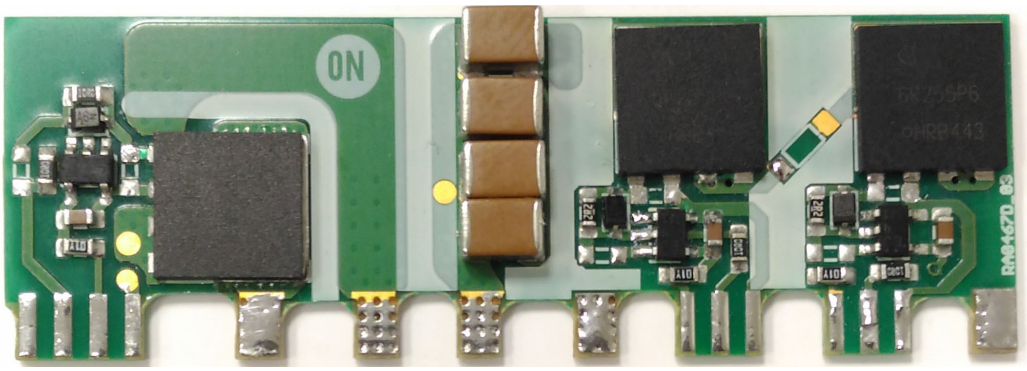

Figure 16. Power Switch Module Photograph

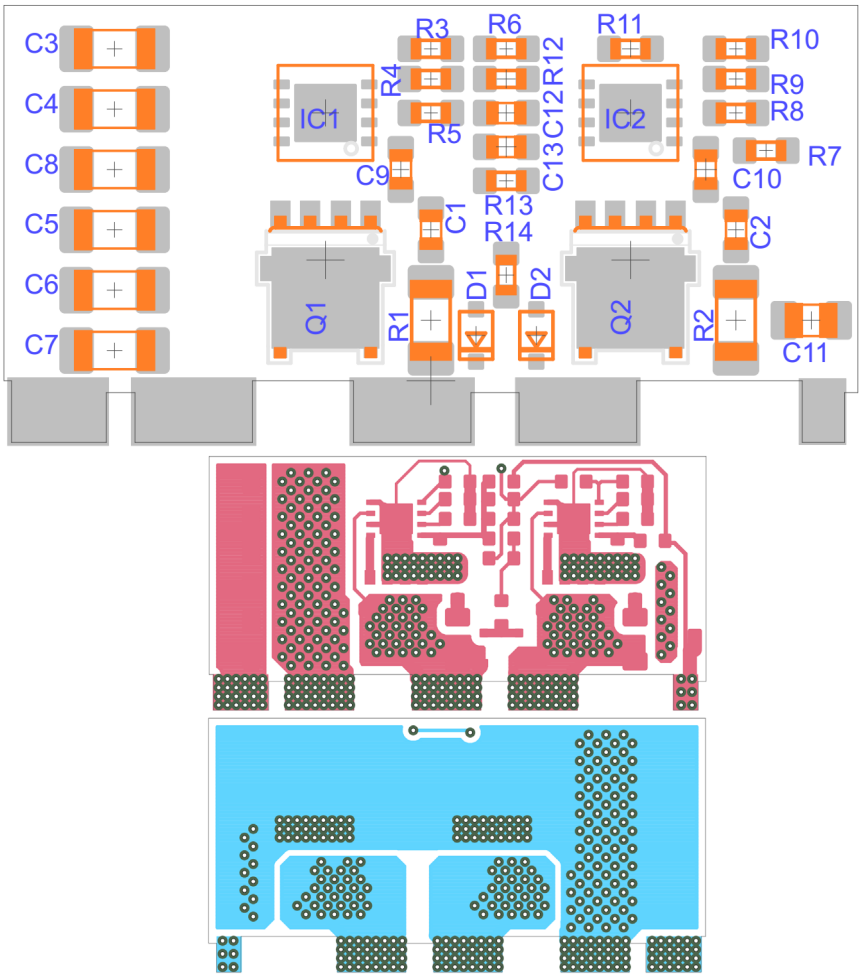


**Figure 17. SR Module, Top Side Components, Top Layer – Red, Bottom Layer – Blue**

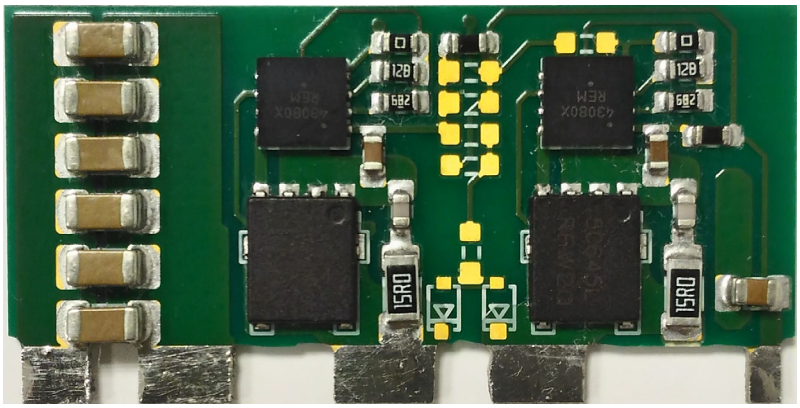

**Figure 18. SR Module Photograph**

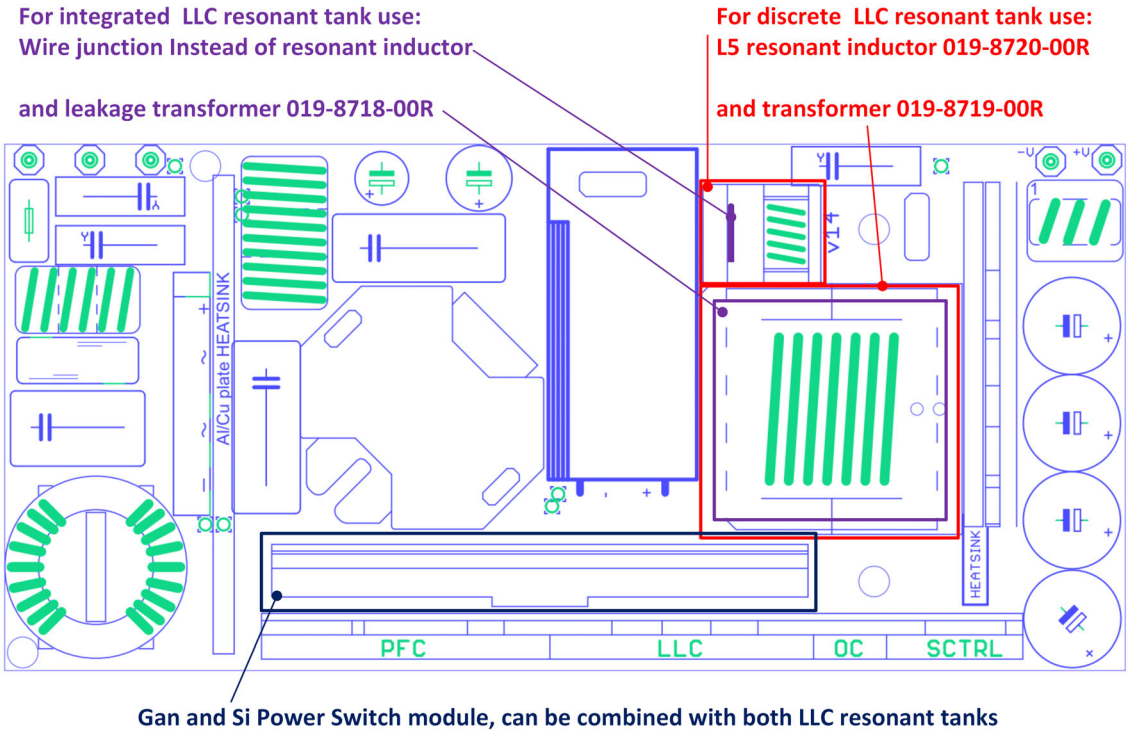


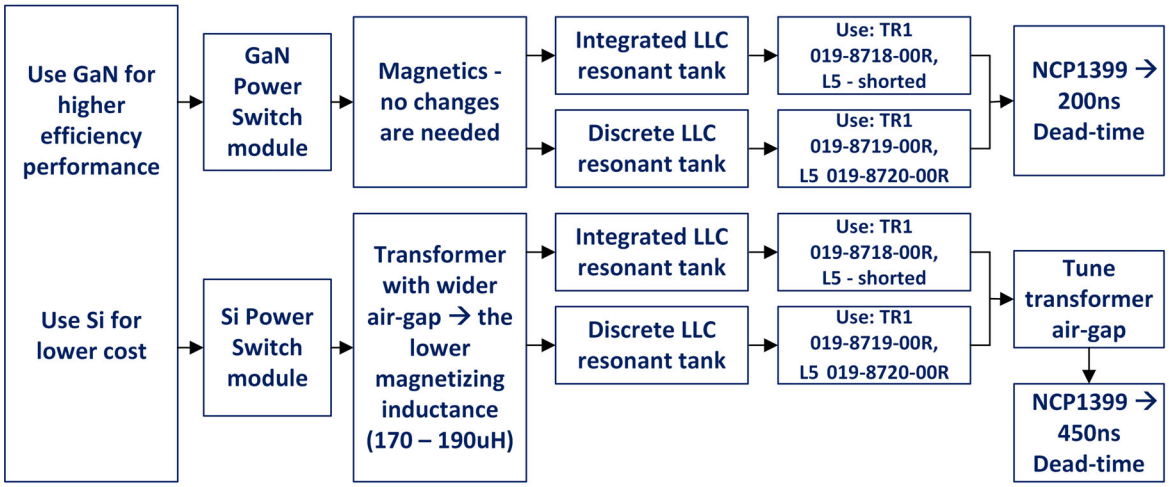


**Figure 19. Resonant Tank Composition And Power Switch Module Selection Procedures**

## MEASUREMENTS

The measurements show the performance of High Power Density Demo−board.

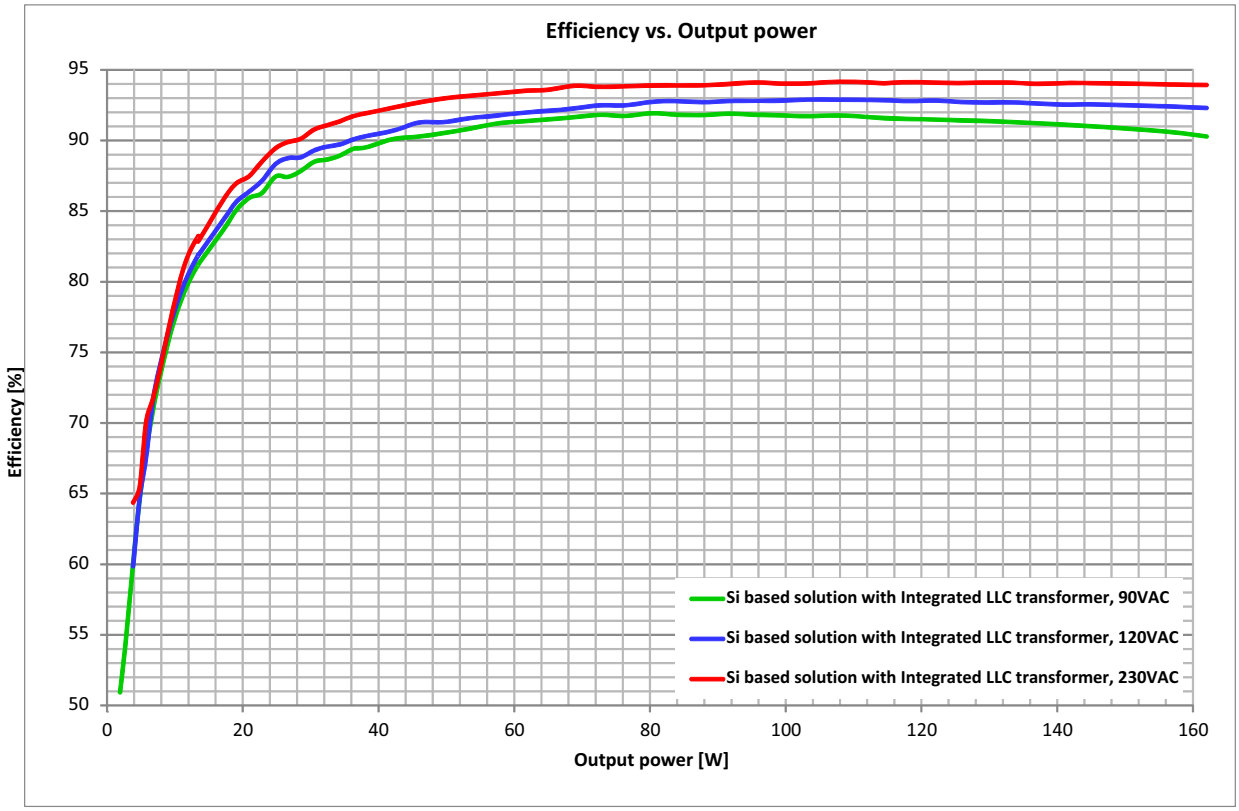


**Figure 20. Efficiency Graph Of High Power Density Demo−Board***

NOTES: *Measured with IPL60R255P6 placed in PFC and LLC stages

**Table 2. EFFICIENCY TABLE**

| Output power level [%] | | 10% | 25% | 50% | 75% | 100% | Max efficiency | Calculated 4−point avg. efficiency |
|---|---|---|---|---|---|---|---|---|
| Efficiency [%] @ Input voltage [$V_{RMS}$] | 90 | 81.24 | 89.42 | 91.74 | 91.72 | 90.90 | 91.93 | 91.14 |
| | 120 | 81.90 | 90.07 | 92.49 | 92.88 | 92.52 | 92.90 | 92.17 |
| | 230 | 82.87 | 91.72 | 93.80 | 94.14 | 94.03 | 94.15 | 93.57 |

**Table 3. STANDBY POWER TABLE**

| Input voltage [Vms] | 90 | 120 | 230 | 265 |
|---|---|---|---|---|
| Standby power [mW] | 149 (Note 1, 2) | 152 (Note 1, 2) | 150 (Note 1, 2) | 150 (Note 1, 2) |

1. Measured with Tektronix PA1000 Power Analyzer and the integration mode was used.
2. Still exists place for no−load optimalisation.

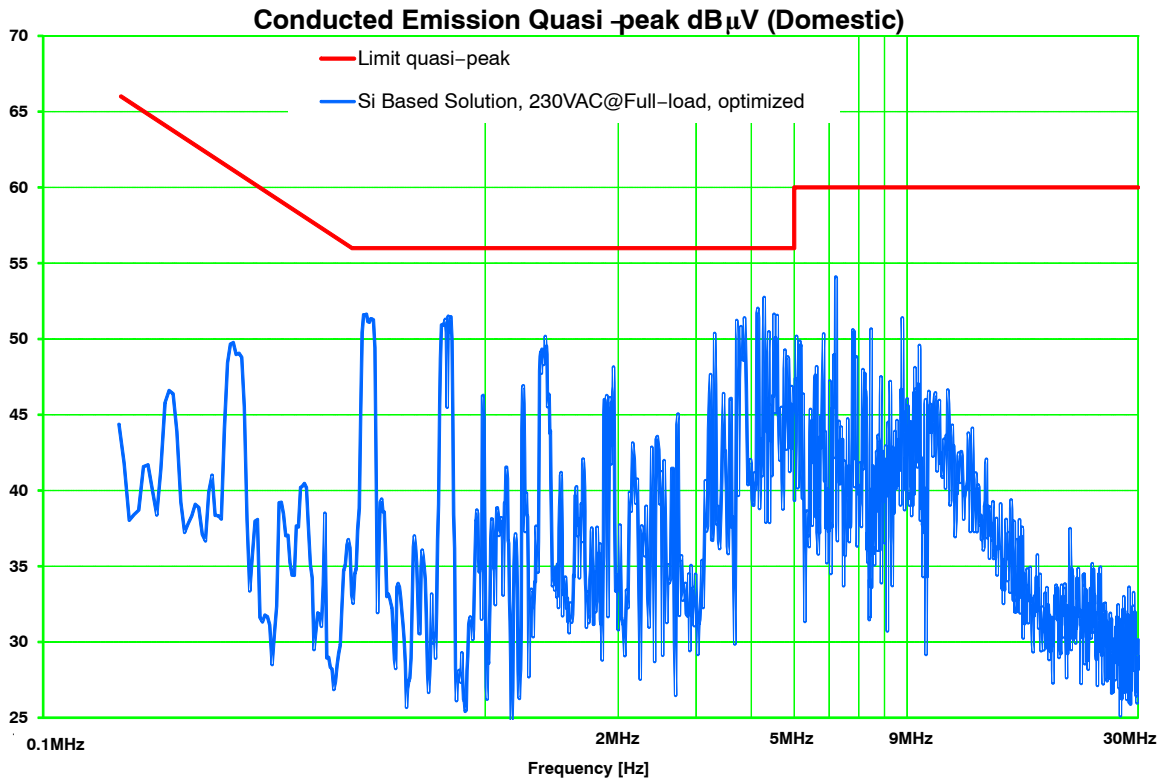


**Figure 21. EMI Signature Comparison @ 230 VAC (Measured MAX Peak)**

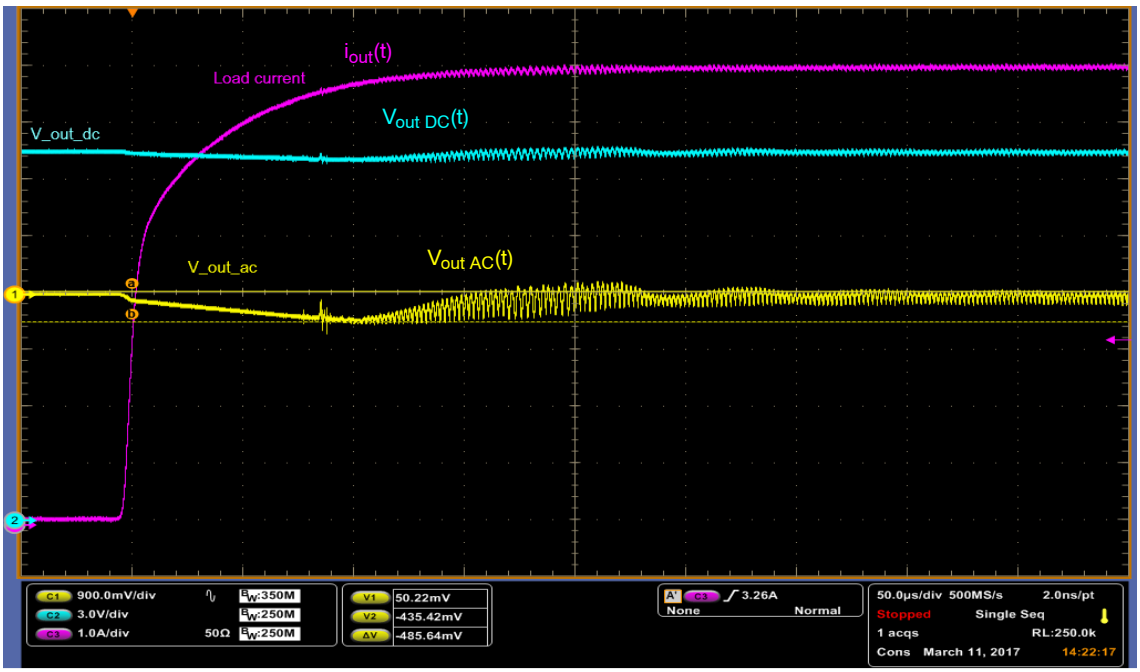


**Figure 22. Transition Response – $I_{OUT}$ = 0 A to 8 A, $V_{IN}$ = 120 V,**

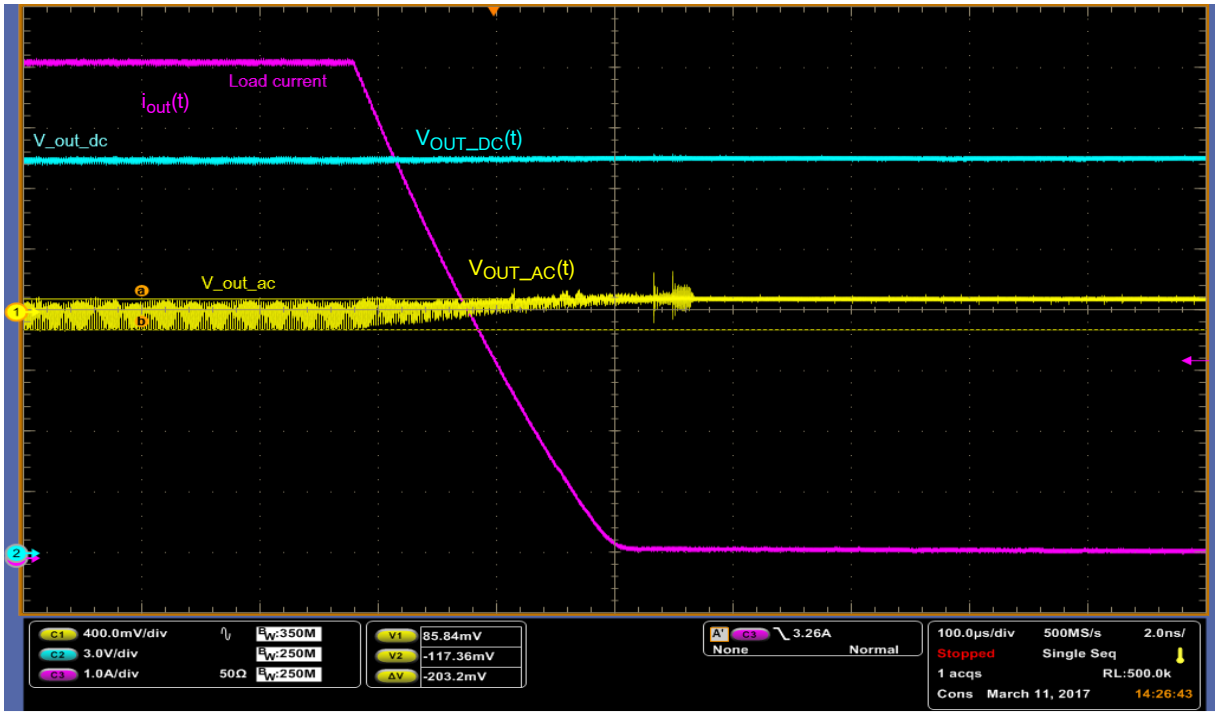


**Figure 23. Transition Response – $I_{OUT}$ = 8A to 0 A, $V_{IN}$ = 120 V,**

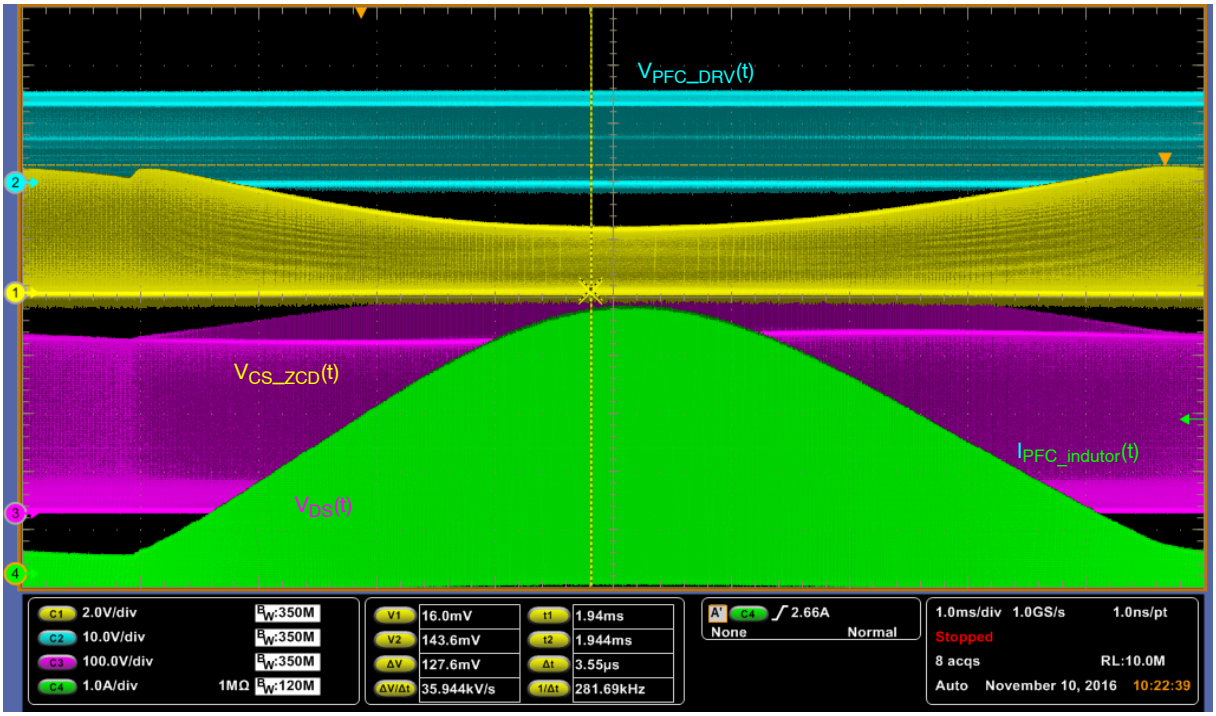


**Figure 24. PFC – Input Current Modulation, $I_{OUT}$ = 7 A, $V_{IN}$ = 120 V,**

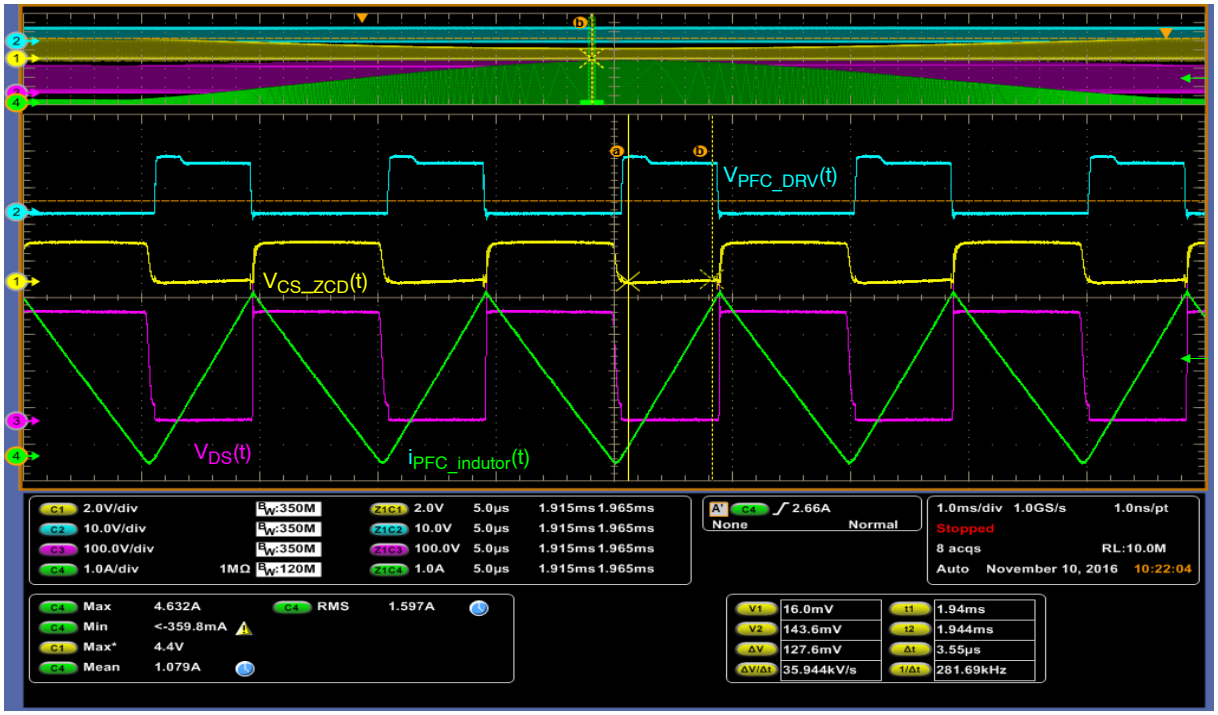


Figure 25. PFC Operating Waveforms, $I_{OUT}$ = 7 A, $V_{IN}$ = 120 V,

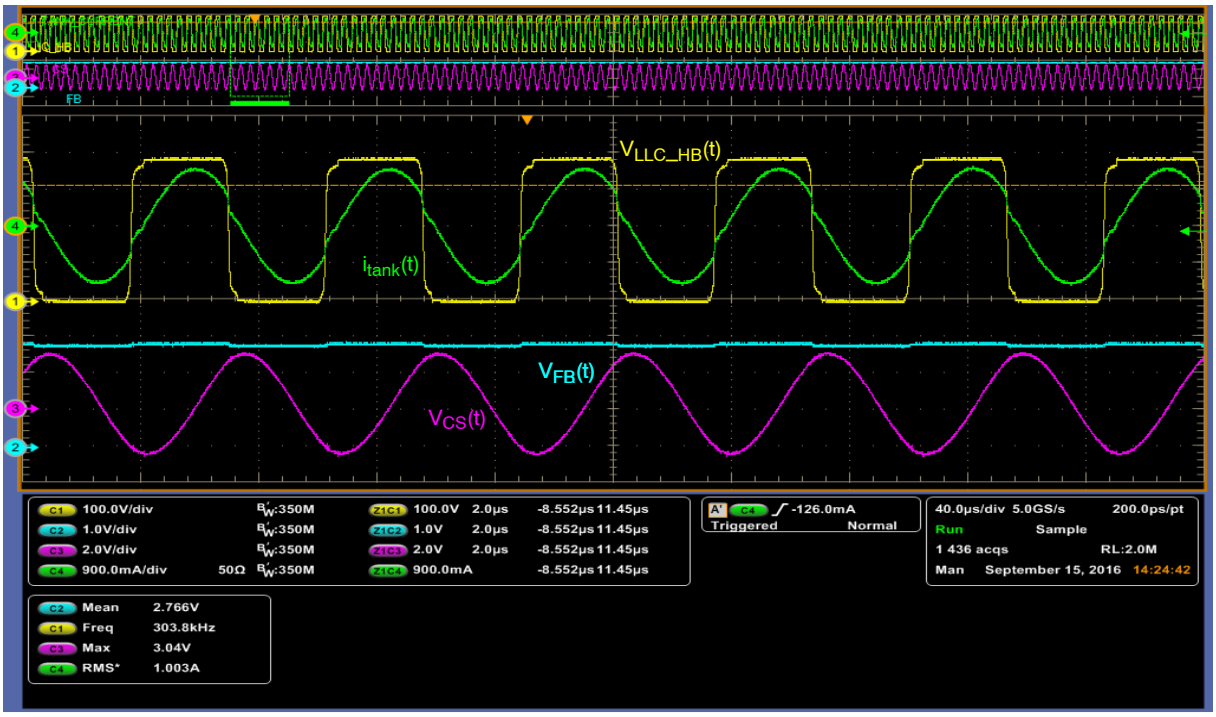


Figure 26. LLC – Stage Normal Operation Waveforms, $I_{OUT}$ = 8A (Full–load)

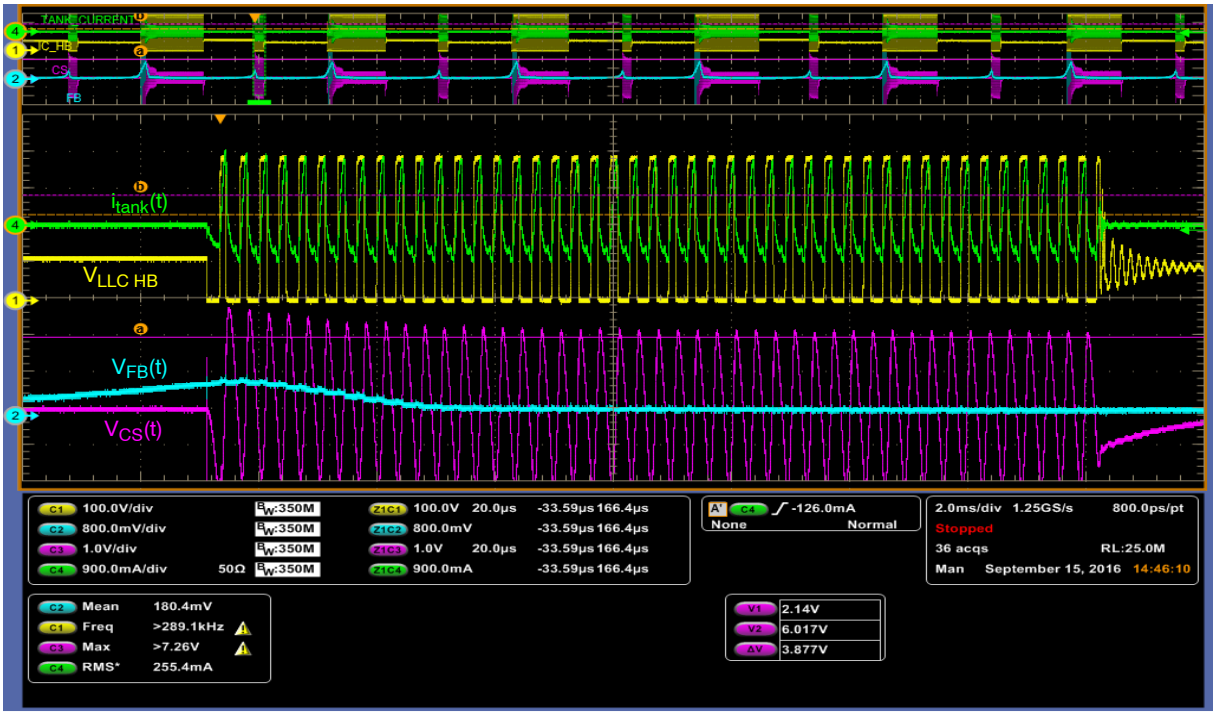


**Figure 27. LLC Stage SKIP MODE Operation Waveforms, $I_{OUT}$ = 600 mA**

**Figure 28. Synchronous Rectifier Operating Waveforms – SKIP MODE $I_{OUT}$ = 100 mA, $V_{IN}$ = 120 V,**

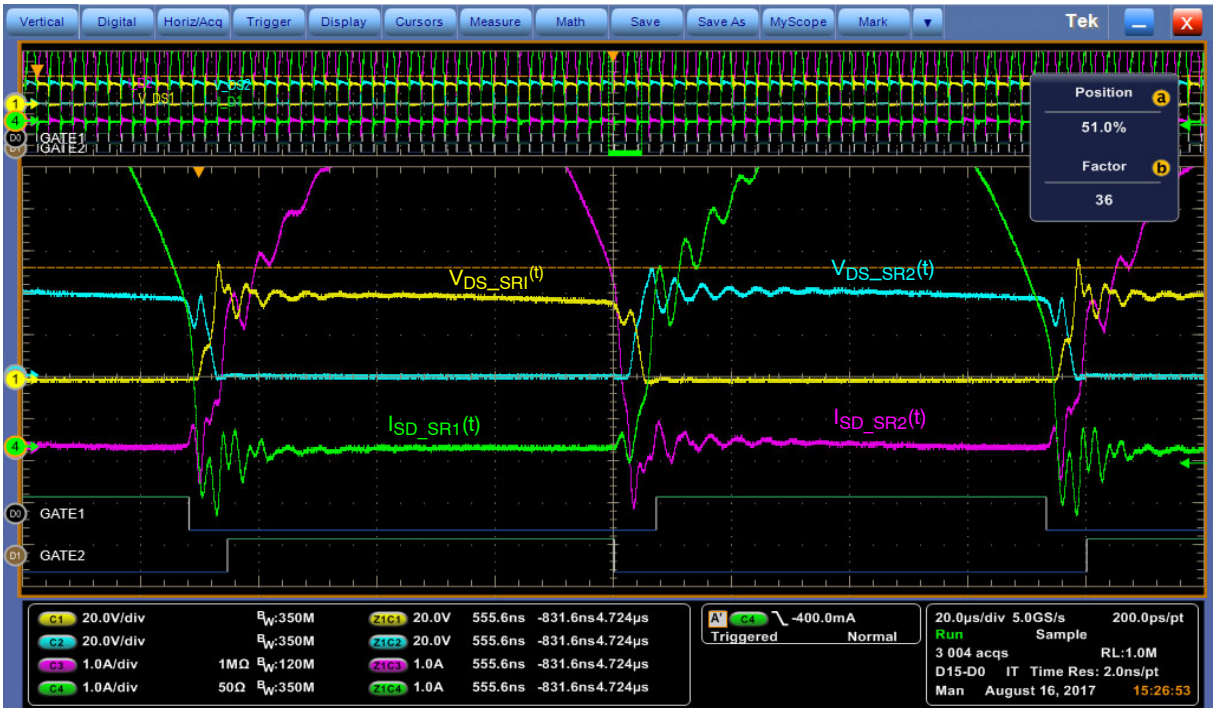


**Figure 29. Synchronous rectifier operating waveforms, $I_{OUT}$ = 8 A, $V_{IN}$ = 120 V,**

**Literature**

High Voltage Active X2 Power Factor Controller:
NCP1615:http://www.onsemi.com/pub_link/Collateral/NCP1615−D.PDF

High Performance Current Mode Resonant Controller with Integrated High Voltage Drivers:
NCP1399: http://www.onsemi.com/pub_link/Collateral/NCP1399−D.PDF

Secondary Side Synchronous Rectifier Controllers:
NCP43080:http://www.onsemi.com/pub_link/Collateral/NCP43080−D.PDF
NCP4305:http://www.onsemi.com/pub/Collateral/NCP4305−D.PDF

Secondary Side SMPS OFF Mode Controller for Low Standby Power
NCP4353:http://www.onsemi.com/pub/Collateral/NCP4353−D.PDF

For Precision Inc. Magnetics please refer to:
Asia: Samuel Yu ASEAN / Asia Business Development Manager, Samuel.Yu@precision−inc.com (+86) 139 16581576
USA: Welly Chou, Design Engineering Manager, Welly.Chou@precision−inc.com (+1) 763−852−6743

**Table 4. BILL OF MATERIALS**

| POWER BOARD v14 | | | | | | | | |
|---|---|---|---|---|---|---|---|---|
| **Parts** | **Qty** | **Description** | **Value** | **Tol-er-anc-e** | **Pack-age** | **Manufacturer** | **Manufacturer Part Number** | **Substitution Allowed** |
| B1 | 1 | Bridge Rectifier | KBJ608G | – | THP | Diodes Inc. | KBJ608G | YES |
| C1 | 1 | Capacitor | 330nF/275V ac | 10% | THP | Wurth Elektronik | 890 334 024 003 | NO |
| C7, C12, C19 | 1 | MLCC SMD | NU | – | C0805 | – | – | – |
| C13, C14 | 1 | MLCC SMD | NU | – | C0603 | – | – | – |
| C25 | 2 | MLCC SMD | NU | – | C0603 | – | – | – |

**Table 4. BILL OF MATERIALS**

| POWER BOARD v14 | | | | | | | | |
|---|---|---|---|---|---|---|---|---|
| **Parts** | **Qty** | **Description** | **Value** | **Tol-er-anc-e** | **Pack-age** | **Manufacturer** | **Manufacturer Part Number** | **Substitution Allowed** |
| C15, C16 | 2 | MLCC SMD | 3.9nF/630V | 5% | C1206 | TDK | CGA5F4C0G2J 392J085AA | NO |
| C17, C18 | 2 | MLCC SMD | 1uF/35V | 20% | C1206 | MULTICOMP | MC1206F105Z 250CT | YES |
| C2 | 1 | Electrolytic Capacitor | 220uF/35V | 20% | THP | YAGEO | SY035M0220B 3S−0815 | |
| C20, C21 | 2 | MLCC SMD | 100p/1kV | 5% | C1206 | Murata | GRM31A5C3A 101JW01D | NO |
| C22 | 1 | MLCC SMD | 3.9nF/25V | 5% | C0805 | Various | Various | YES |
| C24 | 1 | MLCC SMD | NU | – | C1206 | – | – | – |
| C26, C29, C32, C35 | 4 | Electrolytic Capacitor | 680uF/25V | 20% | THP | Wurth Elektronik | 860 020 475 016 | YES |
| | | | 330uF/25V | 20% | | | 870 025 575 009 | |
| C28, C31, C34, C37, C38 | 4 | MLCC SMD | 330nF/25V | 20% | C1206 | Murata | GRM319R71E3 34KA01D | YES |
| C27, C30, C33, C36 | 4 | MLCC SMD | 100nF/35V | 20% | C1206 | Various | Various | YES |
| C3 | 1 | MLCC SMD | 10nF | 10% | C0805 | Various | Various | YES |
| C4 | 1 | Electrolytic Capacitor | 47uF/25V | 10% | E2,5−6 | Nippon Chemi−con | ELXZ250ETD4 70MEB5D | YES |
| C5, C6 | 2 | MKP Film Capacitors | 1uF/450Vdc | 5% | THP | Panasonic | ECW−FD2W10 5J | YES |
| C8 | 1 | Electrolytic Capacitor | 120u/420V | 20% | THP | Rubycon | 420CXW120M EFR16x35 | YES |
| C9, C10, C11 | 3 | MLCC SMD | 470nF/450V | 20% | C1812 | TDK | C4532X7T2W4 74K230KA | YES |
| CY1 | 1 | Ceramic Capacitor − Y | 2.2n/Y1 | 20% | THP | Vishay | VY1222M43Y5 UC63V0 | YES |
| CY2, CY3 | 2 | Ceramic Capacitor − Y | 1.5n/Y1 | 20% | THP | Vishay | VY1152M35Y5 UC63V0 | YES |
| D1, D2 | 2 | Diode SMD | MRA4007T3 G | – | SMA | ON Semiconductor | MRA4007T3G | NO |
| D10 | 1 | Diode SMD | MURHD560 T4G | – | DPACK | ON Semiconductor | MURHD560T4 G | NO |
| D13 | 1 | Diode SMD | MURA160 | – | SMA | ON Semiconductor | MURA160T3G | NO |
| D15, D16 | 3 | Diode SMD | NU | – | SOD32 3 | – | – | – |
| D3, D4, D14 | 3 | Diode SMD | MBR2H100 SFT3G | – | SOD12 3 | ON Semiconductor | MBR2H100SFT 3G | NO |
| D8 | 1 | Diode SMD | MUST BE SHORTED | – | SOD32 3 | – | – | – |
| D19 | 1 | Diode SMD | NRS034HT1 G | – | SOD32 3 | ON Semiconductor | NRS034HT1G | NO |

**Table 4. BILL OF MATERIALS**

| POWER BOARD v14 | | | | | | | | |
|---|---|---|---|---|---|---|---|---|
| **Parts** | **Qty** | **Description** | **Value** | **Tol-er-anc-e** | **Pack-age** | **Manufacturer** | **Manufacturer Part Number** | **Substitution Allowed** |
| D11, D12 | 9 | Diode SMD | NU | – | SOD323 | – | – | – |
| D9, D17, D18, | 9 | Diode SMD | BAS16HT1G | – | SOD323 | ON Semiconductor | BAS16HT1G | NO |
| D5, D6 | 2 | Diode SMD | BAS20HT1G | – | SOD323 | ON Semiconductor | BAS20HT1G | NO |
| D7 | 1 | Zener Diode SMD | MM3Z20VT1G | – | SOD323 | ON Semiconductor | MM3Z20VT1G | NO |
| F1 | 1 | Fuse | T5A | – | THP | Bussmann / Eaton | SS–5H–5A–BK | YES |
| HEATSINK | 1 | HEATSINK 50x16x2 mm | Aluminium heatsink | – | – | – | – | – |
| L1 (Note 4) | 1 | EMI Filter | NU | – | – | – | – | – |
| L2 | 1 | EMI Filter | 10mH | 20% | THP | Wurth Elektronik | 744 823 210 | NO |
| L3 | 1 | EMI Filter | 90uH | 20% | THP | Wurth Elektronik | 744 701 3 | NO |
| L4 | 1 | PFC INDUCTOR | 150uH | 20% | RM10 | Precision Inc | 019–8650–03R | NO |
| L5 (Note 3) | 1 | LLC resonant inductor | 51uH | 20% | RM5 | Precision Inc | 019–8720–00R | NO |
| L6 (Note 4) | 1 | Common mode inductor | NU | – | THP | – | – | – |
| L7, L8 (Note 4) | 2 | EMI Filter, Ferrite Bead | 39Ohm@25 MHz | – | THP | Elektronik Wurth | 742 700 713 | NO |
| Q1 | 1 | N–CHANNEL MOS FET | NVR5198NL | – | SOT23 | ON Semiconductor | NVR5198NL | NO |
| Q2 | 1 | PNP Transistror | NU | – | SOT23 | – | – | – |
| R1, R2 | 2 | Resistor SMD | 2R2 | 1% | R0805 | Various | Various | YES |
| R12, R19, R26 | 3 | Resistor SMD | 0R | – | R0805 | Various | Various | YES |
| R13, R14 | 2 | Resistor SMD | 200m | 5% | R6332 | Various | Various | YES |
| R15, R16, R17, R18 | 4 | Resistor SMD | 3M3 | 1% | R0805 | Various | Various | YES |
| R20 | 1 | Resistor SMD | 1R | 1% | R1206 | Various | Various | YES |
| R21 | 1 | Resistor SMD | 910 | 1% | R0805 | Various | Various | YES |
| R22, R23 | 2 | Resistor SMD | 2R | 1% | R0603 | Various | Various | YES |
| R24, R25, R28 | 3 | Resistor SMD | NU | – | R0603 | – | – | – |

**Table 4. BILL OF MATERIALS**

| POWER BOARD v14 | | | | | | | | |
|---|---|---|---|---|---|---|---|---|
| **Parts** | **Qty** | **Description** | **Value** | **Tol-er-anc-e** | **Pack-age** | **Manufacturer** | **Manufacturer Part Number** | **Substitution Allowed** |
| R27 | 1 | Resistor SMD | 0R | – | R2010 | Various | Various | YES |
| R29 | 1 | Resistor SMD | 2R2 | – | R1206 | Various | Various | YES |
| R3, R4, R5, R6 | 4 | Resistor SMD | 1k2 | 1% | R1206 | Various | Various | YES |
| R7 | 1 | Varistor | 275 Vac | – | THP | Wurth Elektronik | 820 512 711 | YES |
| R8 | 1 | Resistor SMD | NU | – | R0805 | – | – | – |
| R9 | 1 | Resistor SMD | 12k | 1% | R0603 | Various | Various | YES |
| R10 | 1 | Resistor SMD | 5k6 | 1% | R0805 | Various | Various | YES |
| TR1 (Note 3) | 1 | LLC Transformer | – | – | – | Precision Inc | 019−8719−00R / 019−8718−00R | NO |

3. Follow Procedure in Figure 19
4. Optionnal component, can be used to tune the Demo−board EMI signature

**Table 4. BILL OF MATERIALS**

| CONTROL MODULE V4 | | | | | | | | |
|---|---|---|---|---|---|---|---|---|
| **Parts** | **Qty** | **Description** | **Value** | **Tol-er-anc-e** | **Pack-age** | **Manufacturer** | **Manufacturer Part Number** | **Substitution Allowed** |
| C1, C16 | 2 | MLCC SMD | 100pF | 20% | C0603 | Various | Various | YES |
| C10 | 1 | MLCC SMD | 3.3pF | 20% | C0603 | Various | Various | YES |
| C11, C26, C27 | 3 | MLCC SMD | NU | – | C0603 | – | – | – |
| C12 | 1 | MLCC SMD | 10uF/25V | 20% | C1206 | Various | Various | YES |
| C15 | 1 | MLCC SMD | 470pF | 20% | C0603 | Various | Various | YES |
| C17 | 1 | MLCC SMD | NU | – | C0603 | – | – | – |
| C18 | 1 | MLCC SMD | 100nF/25V | 20% | C0805 | Various | Various | YES |
| C19, C20, C29, C30 | 4 | MLCC SMD | 47u/25V | 20% | C1206 | TDK | C3216X5R1E476M160AC | |
| C2, C5, C13, C14, C21 | 5 | MLCC SMD | 10nF | 20% | C0603 | Various | Various | YES |
| C22 | 1 | MLCC SMD | 1uF/25V | 20% | C0603 | Various | Various | YES |
| C23 | 1 | MLCC SMD | 100nF/25V | 20% | C0603 | Various | Various | YES |
| C24 | 1 | MLCC SMD | 22pF | 20% | C0603 | Various | Various | YES |
| C25 | 1 | MLCC SMD | 330pF | 20% | C0603 | Various | Various | YES |
| C28 | 1 | MLCC SMD | NU | – | C1206 | – | – | – |
| C3, C6 | 2 | MLCC SMD | 220nF | 10% | C0603 | Various | Various | YES |
| C4 | 1 | MLCC SMD | 2.2uF | 20% | C0603 | TDK | C1608X5R1E225K080AB | YES |

**Table 4. BILL OF MATERIALS**

| CONTROL MODULE V4 | | | | | | | | |
|---|---|---|---|---|---|---|---|---|
| **Parts** | **Qty** | **Description** | **Value** | **Tol-er-anc-e** | **Pack-age** | **Manufacturer** | **Manufacturer Part Number** | **Substitution Allowed** |
| C7 | 1 | MLCC SMD | 1nF | 10% | C0603 | Various | Various | YES |
| C8, C9 | 2 | MLCC SMD | 100nF | 10% | C0603 | Various | Various | YES |
| D1 | 1 | Zener Diode | MM3Z4V3T 1G | – | SOD32 3 | ON Semiconductor | MM3Z4V3T1G | NO |
| D3 | 1 | Diode SMD | MURA160 | – | SMA | ON Semiconductor | MURA160T3G | NO |
| D4 | 1 | Diode SMD | BAS16HT1 G | – | SOD32 3 | ON Semiconductor | BAS16HT1G | NO |
| D5 | 1 | Zener Diode SMD | MM3Z20VT 1G | – | SOD32 3 | ON Semiconductor | MM3Z20VT1G | NO |
| D6 | 1 | Diode | NU | – | SOD32 3 | – | – | – |
| IC1 | 1 | Secondary side CV/CC controller | NCP4353A | – | TSOP6 | ON Semiconductor | NCP4353ASNT 1G | NO |
| Q1 | 1 | PNP Transistror | NU | – | SOT23 | – | – | – |
| R1, R3, R4, R12, R38, R41 | 6 | Resistor SMD | 0R | – | R0603 | Various | Various | YES |
| R10, R43 | 2 | Resistor SMD | 200k | 1% | R0603 | Various | Various | YES |
| R11 | 1 | Resistor SMD | 62k | 1% | R0603 | Various | Various | YES |
| R15 | 1 | Resistor SMD | 0R | 1% | R0603 | Various | Various | YES |
| R16 | 1 | Resistor SMD | 910R | 1% | R0603 | Various | Various | YES |
| R17, R24, R26, R33, R35, R36, R37, R40 | 8 | Resistor SMD | NU | – | R0603 | – | – | – |
| R18 | 1 | Resistor SMD | 360k | 1% | R0603 | Various | Various | YES |
| R2 | 2 | Resistor SMD | 3k9 | 1% | R0603 | Various | Various | YES |
| R14 | 2 | Resistor SMD | 4k7 | 1% | R0603 | Various | Various | YES |
| R20 | 1 | Resistor SMD | 910k | 1% | R0603 | Various | Various | YES |
| R21, R31, R42 | 3 | Resistor SMD | 1k | 1% | R0603 | Various | Various | YES |
| R22, R44 | 2 | Resistor SMD | 13k | 1% | R0603 | Various | Various | YES |
| R23 | 1 | NTC Thermistor | 330k | 1% | Throug h Hole | VISHAY | NTCLE100E33 34JB0 | YES |

**Table 4. BILL OF MATERIALS**

| CONTROL MODULE V4 | | | | | | | | |
|---|---|---|---|---|---|---|---|---|
| **Parts** | **Qty** | **Description** | **Value** | **Tol-er-anc-e** | **Pack-age** | **Manufacturer** | **Manufacturer Part Number** | **Substitution Allowed** |
| R25 | 1 | Resistor SMD | 100R | 1% | R0603 | Various | Various | YES |
| R27 | 1 | Resistor SMD | 5R6 | 1% | R0805 | Various | Various | YES |
| R28 | 1 | Resistor SMD | 5k1 | 1% | R0603 | Various | Various | YES |
| R29 | 1 | Resistor SMD | 750R | 1% | R0603 | Various | Various | YES |
| R30 | 1 | Resistor SMD | 68k | 1% | R0603 | Various | Various | YES |
| R34 | 1 | Resistor SMD | 220R | 1% | R0603 | Various | Various | YES |
| R39 | 1 | Resistor SMD | 470k | 1% | R0603 | Various | Various | YES |
| R45 | 1 | Resistor SMD | 15k | 1% | R0603 | Various | Various | YES |
| R46 | 1 | Resistor SMD | 7k5 | 1% | R0603 | Various | Various | YES |
| R5 | 1 | Resistor SMD | 83.5k | 1% | R0603 | Various | Various | YES |
| R6 | 1 | Resistor SMD | 27k | 1% | R0603 | Various | Various | YES |
| R13, R19 | 3 | Resistor SMD | 30k | 1% | R0603 | Various | Various | YES |
| R7 | 1 | Resistor SMD | 270k | 1% | R0603 | Various | Various | YES |
| R8 | 1 | Resistor SMD | 120k | 1% | R0603 | Various | Various | YES |
| R9 | 1 | NTC Thermistor | 330k | 5% | R0805 | VISHAY | NTCS0805E3334JHT | YES |
| U1 | 1 | PFC Controller | NCP1615C2DR2G | – | SO15 | ON Semiconductor | NCP1615C2DR2G | NO |
| U2* | 1 | LLC Controller | NCP1399 | – | SOIC16 | ON Semiconductor | NCP1399* | NO |
| U3, U4 | 2 | Optocoupler | TCLT1008 | – | DIP4 | VISHAY | TCLT1008TR–ND | NO |

**Table 4. BILL OF MATERIALS**

| SI MOSFETS MODULE V3 | | | | | | | | |
|---|---|---|---|---|---|---|---|---|
| **Parts** | **Qty** | **Description** | **Value** | **Tol-er-anc-e** | **Pack-age** | **Manufacturer** | **Manufacturer Part Number** | **Substitution Allowed** |
| C1, C2, C41 | 3 | MLCC SMD | 1uF/25V | 10% | C0603 | Various | Various | YES |
| C3, C4, C5, C6 | 4 | MLCC SMD | 100nF/450V | 20% | C1206 | TDK | C3216X7T2W104K160AA | YES |
| C7 | 1 | MLCC SMD | NU | 10% | C1206 | – | – | – |

**Table 4. BILL OF MATERIALS**

| SI MOSFETS MODULE V3 | | | | | | | | |
|---|---|---|---|---|---|---|---|---|
| **Parts** | **Qty** | **Description** | **Value** | **Tol-er-anc-e** | **Pack-age** | **Manufacturer** | **Manufacturer Part Number** | **Substitution Allowed** |
| D1, D2, D14 | 3 | Diode SMD | BAS16HT1G | – | SOD323 | ON Semiconductor | BAS16HT1G | NO |
| M2, M4, M5 | 3 | Power MOSFET | FCMT199N60 | – | POWER88 | Fairchild/ ON Semiconductor | FCMT199N60 | YES |
| Q1, Q2, Q6 | 3 | Bipolar transistor Totem−pole | – | – | SC74A | – | – | – |
| R1, R6 | 2 | Resistor SMD | 2R2 | 1% | R0603 | Various | Various | YES |
| R2, R7, R35 | 3 | Resistor SMD | 10k | 1% | R0603 | Various | Various | YES |
| R3, R8, R37 | 3 | Resistor SMD | – | – | R0603 | – | – | – |
| R4, R9, R29, R38 | 4 | Resistor SMD | 0R | – | R0603 | Various | Various | YES |
| R5, R10, R39 | 3 | Resistor SMD | 0R | – | R0603 | Various | Various | YES |

**Table 4. BILL OF MATERIALS**

| SR MODULE V4.2 | | | | | | | | |
|---|---|---|---|---|---|---|---|---|
| **Parts** | **Qty** | **Description** | **Value** | **Tol-er-anc-e** | **Pack-age** | **Manufacturer** | **Manufacturer Part Number** | **Substitution Allowed** |
| C1, C2 | 2 | MLCC SMD | 100pF/100V | 20% | C0603 | Various | Various | YES |
| C11 | 1 | MLCC SMD | 1u/25V | 20% | C0805 | Various | Various | YES |
| C12 | 1 | MLCC SMD | 22nF | 20% | C0603 | Various | Various | YES |
| C13 | 1 | MLCC SMD | NU | – | C0603 | – | – | – |
| C3, C4, C5, C6, C7, C8 | 6 | MLCC SMD | 1uF/25V | 20% | C1206 | MULTICOMP | MC1206F105Z250CT | YES |
| C9, C10 | 2 | MLCC SMD | 2.2uF | 20% | C0603 | TDK | C1608X5R1E225K080AB | YES |
| D1, D2 | 2 | Diode SMD | BAS20HT1G | – | SOD323 | ON Semiconductor | BAS20HT1G | NO |
| IC1, IC2 | 2 | Synchronous rectifier controller | NCP43080 | – | DFN−8 | ON Semiconductor | NCP43080DMNTWG | NO |
| Q1, Q2 | 2 | Power MOSFET | NVMFS5C670NL | – | SO8FL | ON Semiconductor | NVMFS5C670NL | YES |
| R1, R2 | 2 | Resistor SMD | 15R | 1% | R1206 | Various | Various | YES |
| R11 | 1 | Resistor SMD | 0R | – | R0603 | Various | Various | YES |
| R12 | 1 | Resistor SMD | 47k | 1% | R0603 | Various | Various | YES |
| R13 | 1 | Resistor SMD | 0R | – | R0603 | Various | Various | YES |

**Table 4. BILL OF MATERIALS**

| SR MODULE V4.2 | | | | | | | | |
|---|---|---|---|---|---|---|---|---|
| **Parts** | **Qty** | **Description** | **Value** | **Tol-er-anc-e** | **Pack-age** | **Manufacturer** | **Manufacturer Part Number** | **Substitution Allowed** |
| R14 | 1 | Resistor SMD | 430R | 1% | R0603 | Various | Various | YES |
| R3, R10 | 2 | Resistor SMD | NU | – | R0603 | – | – | – |
| R4, R9 | 2 | Resistor SMD | 1k3 | 1% | R0603 | Various | Various | YES |
| R5, R8 | 2 | Resistor SMD | 6k8 | 1% | R0603 | Various | Various | YES |
| R6, R7 | 2 | Resistor SMD | 5R1 | 1% | R0603 | Various | Various | YES |

5. All parts are Lead−free

**onsemi**, onsemi, and other names, marks, and brands are registered and/or common law trademarks of Semiconductor Components Industries, LLC dba "**onsemi**" or its affiliates and/or subsidiaries in the United States and/or other countries. **onsemi** owns the rights to a number of patents, trademarks, copyrights, trade secrets, and other intellectual property. A listing of **onsemi**'s product/patent coverage may be accessed at www.onsemi.com/site/pdf/Patent−Marking.pdf. **onsemi** is an Equal Opportunity/Affirmative Action Employer. This literature is subject to all applicable copyright laws and is not for resale in any manner.

The evaluation board/kit (research and development board/kit) (hereinafter the "board") is not a finished product and is not available for sale to consumers. The board is only intended for research, development, demonstration and evaluation purposes and will only be used in laboratory/development areas by persons with an engineering/technical training and familiar with the risks associated with handling electrical/mechanical components, systems and subsystems. This person assumes full responsibility/liability for proper and safe handling. Any other use, resale or redistribution for any other purpose is strictly prohibited.

**THE BOARD IS PROVIDED BY ONSEMI TO YOU "AS IS" AND WITHOUT ANY REPRESENTATIONS OR WARRANTIES WHATSOEVER. WITHOUT LIMITING THE FOREGOING, ONSEMI (AND ITS LICENSORS/SUPPLIERS) HEREBY DISCLAIMS ANY AND ALL REPRESENTATIONS AND WARRANTIES IN RELATION TO THE BOARD, ANY MODIFICATIONS, OR THIS AGREEMENT, WHETHER EXPRESS, IMPLIED, STATUTORY OR OTHERWISE, INCLUDING WITHOUT LIMITATION ANY AND ALL REPRESENTATIONS AND WARRANTIES OF MERCHANTABILITY, FITNESS FOR A PARTICULAR PURPOSE, TITLE, NON−INFRINGEMENT, AND THOSE ARISING FROM A COURSE OF DEALING, TRADE USAGE, TRADE CUSTOM OR TRADE PRACTICE.**

**onsemi** reserves the right to make changes without further notice to any board.

You are responsible for determining whether the board will be suitable for your intended use or application or will achieve your intended results. Prior to using or distributing any systems that have been evaluated, designed or tested using the board, you agree to test and validate your design to confirm the functionality for your application. Any technical, applications or design information or advice, quality characterization, reliability data or other services provided by **onsemi** shall not constitute any representation or warranty by **onsemi**, and no additional obligations or liabilities shall arise from **onsemi** having provided such information or services.

**onsemi** products including the boards are not designed, intended, or authorized for use in life support systems, or any FDA Class 3 medical devices or medical devices with a similar or equivalent classification in a foreign jurisdiction, or any devices intended for implantation in the human body. You agree to indemnify, defend and hold harmless **onsemi**, its directors, officers, employees, representatives, agents, subsidiaries, affiliates, distributors, and assigns, against any and all liabilities, losses, costs, damages, judgments, and expenses, arising out of any claim, demand, investigation, lawsuit, regulatory action or cause of action arising out of or associated with any unauthorized use, even if such claim alleges that **onsemi** was negligent regarding the design or manufacture of any products and/or the board.

This evaluation board/kit does not fall within the scope of the European Union directives regarding electromagnetic compatibility, restricted substances (RoHS), recycling (WEEE), FCC, CE or UL, and may not meet the technical requirements of these or other related directives.

FCC WARNING − This evaluation board/kit is intended for use for engineering development, demonstration, or evaluation purposes only and is not considered by **onsemi** to be a finished end product fit for general consumer use. It may generate, use, or radiate radio frequency energy and has not been tested for compliance with the limits of computing devices pursuant to part 15 of FCC rules, which are designed to provide reasonable protection against radio frequency interference. Operation of this equipment may cause interference with radio communications, in which case the user shall be responsible, at its expense, to take whatever measures may be required to correct this interference.

**onsemi** does not convey any license under its patent rights nor the rights of others.

LIMITATIONS OF LIABILITY: **onsemi** shall not be liable for any special, consequential, incidental, indirect or punitive damages, including, but not limited to the costs of requalification, delay, loss of profits or goodwill, arising out of or in connection with the board, even if **onsemi** is advised of the possibility of such damages. In no event shall **onsemi**'s aggregate liability from any obligation arising out of or in connection with the board, under any theory of liability, exceed the purchase price paid for the board, if any.

The board is provided to you subject to the license and other terms per **onsemi**'s standard terms and conditions of sale. For more information and documentation, please visit www.onsemi.com.

## ADDITIONAL INFORMATION

**TECHNICAL PUBLICATIONS**:
**Technical Library:** www.onsemi.com/design/resources/technical−documentation
**onsemi Website:** www.onsemi.com

**ONLINE SUPPORT**: www.onsemi.com/support
**For additional information, please contact your local Sales Representative at** www.onsemi.com/support/sales