FAN65008B-GEVB

High Performance 65 V, 10 A Voltage Mode Synchronous PWM Buck Regulator Evaluation Board User's Manual

ON Semiconductor®

www.onsemi.com

EVAL BOARD USER'S MANUAL

Description

FAN65008B is a wide VIN highly efficient synchronous buck regulator, with integrated high side and low side power MOSFETs. The device incorporates a fixed frequency voltage mode PWM controller supporting a wide voltage range from 4.5 V to 65 V and can handle continuous currents up to 10 A.

FAN65008B includes a 0.67% accurate reference voltage to achieve tight regulation. The switching frequency can be programmed from 100 kHz to 1 MHz. To improve efficiency at light load condition, the device can be set to discontinuous conduction mode with pulse skipping operation.

FAN65008B has dual LDOs to minimize power loss and integrated current sense circuit that provides cycle-by-cycle current limiting. This single phase buck regulator offers complete protection features including Over current protection, Thermal shutdown, Under-voltage lockout, Over voltage protection, Under voltage protection and Short-circuit protection.

FAN65008B uses ON Semiconductor's high performance POWERTRENCH® MOSFETs that reduces ringing in switching applications. FAN65008B integrates the controller, driver, and power MOSFETs into a thermally enhanced, compact 6×6 mm PQFN package. With an integrated approach, the complete DC/DC converter is optimized from the controller and driver to MOSFET switching performance, delivering a high power density solution.

Performance Specifications of the FAN65008B−GEVB

Parameter	Conditions	Performance Value
Input Voltage	Range 30 V to 60 V	48 V
Output Current		10 A
Output Voltage	13.4 V, 17 V, 24 V and 30.5 V	24 V
Output Voltage Ripple		40 mV p−p
Transient Response	Peak Deviation Load step 3 A/μs to 8 A/μs	1.1 V
Switching Frequency	100 kH – 1 MHz	300 kHz
Efficiency		97.7%

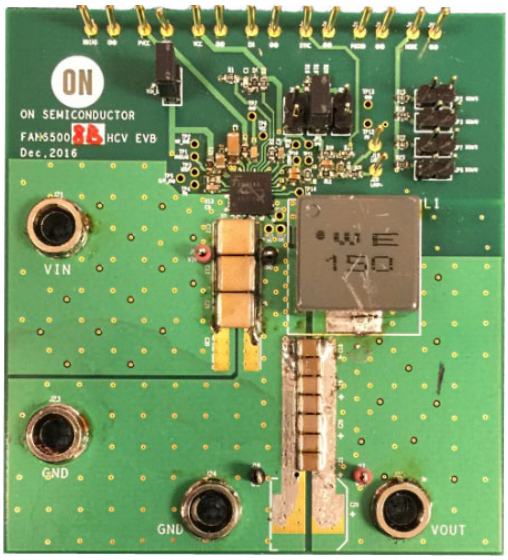

Figure 1. FAN65008B Evaluation Board

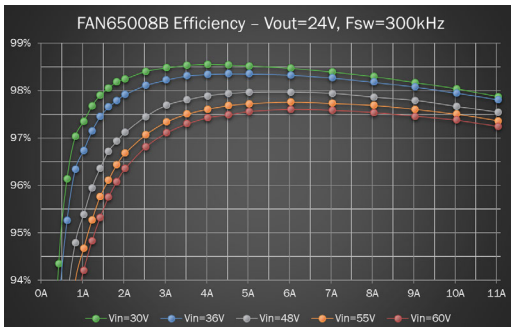

Figure 2. FAN65008B Efficiency

November, 2018 – Rev. 2

Publication Order Number:
EVBUM2526/D

The FAN65008B−GEVB has a simple layout and allows access to the appropriate signals through test points. To evaluate the performance, follow the procedure below and refer to Figure 3.

1. Connect a power supply to the input terminals V_{IN} and GND. Set V_{IN} between 35 V to 60 V.
2. Connect the positive terminal of the electronic load to V_{OUT} and negative terminal to GND.
3. There are 2 ways to enable the device:
   a. Use external voltage source of 2 V~5 V regardless of input voltage range, on the EN pin.
   b. Use V_{IN} voltage divider. If so, 2 requirements need to be satisfied: J1 jumper be connected, $V_{IN} \geq V_{IN\_UVLO}$.
4. The evaluation board should now power up with a 13.4 V output voltage.
5. Check for the proper output voltage of 13.4 V (±1%) at the output terminals V_{OUT} and GND. Measurement can also be done with a multimeter with the positive and negative leads between V_{OUT} and GND.
6. Set the load to 6 A through the electronic load. Check for the stable operation of the PH (TP16) signal on the oscilloscope. Measure the switching frequency. A test point is conveniently located at the head of the inductor.

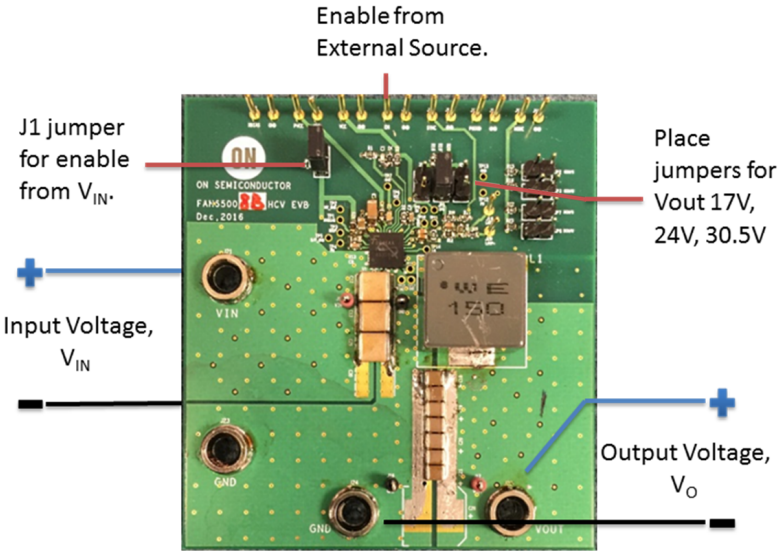

Figure 3. EVM Board Connections

Measurement/Performance Guidelines:

1. The evaluation board has an easy access to measure AC analysis, if required. Connect the injection signal across the resistor (R25) as shown and measure AC analysis through a network analyzer.

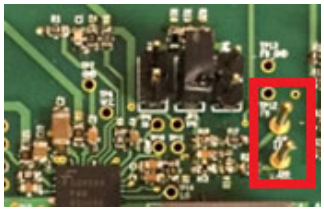

2. When measuring the output voltage ripple, maintain the shortest possible ground lengths on the oscilloscope probe. Long ground leads can erroneously inject high frequency noise into the measured ripple.
3. For efficiency measurements, connect an ammeter in series with the input supply to measure the input current. Connect an electronic load to the output for output current

TYPICAL PERFORMANCE CHARACTERISTICS

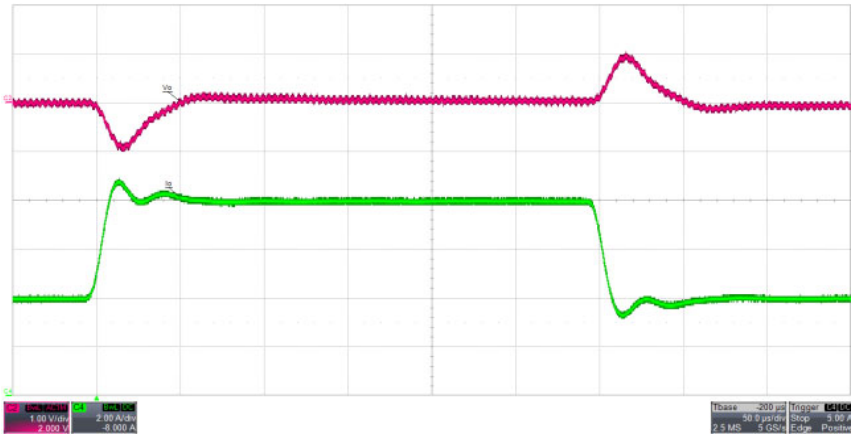

Figure 4. Load Step between 50% and 100% Load

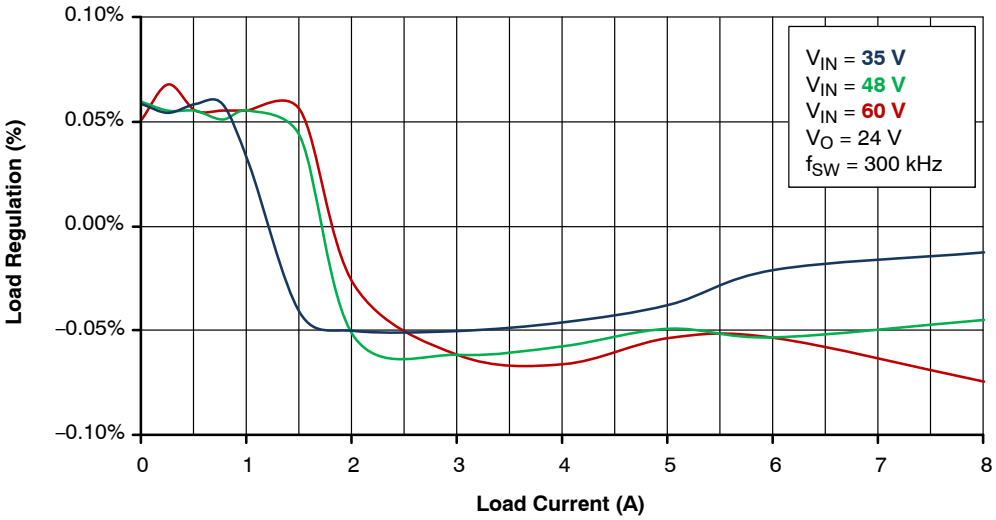

Figure 5. Load Regulation

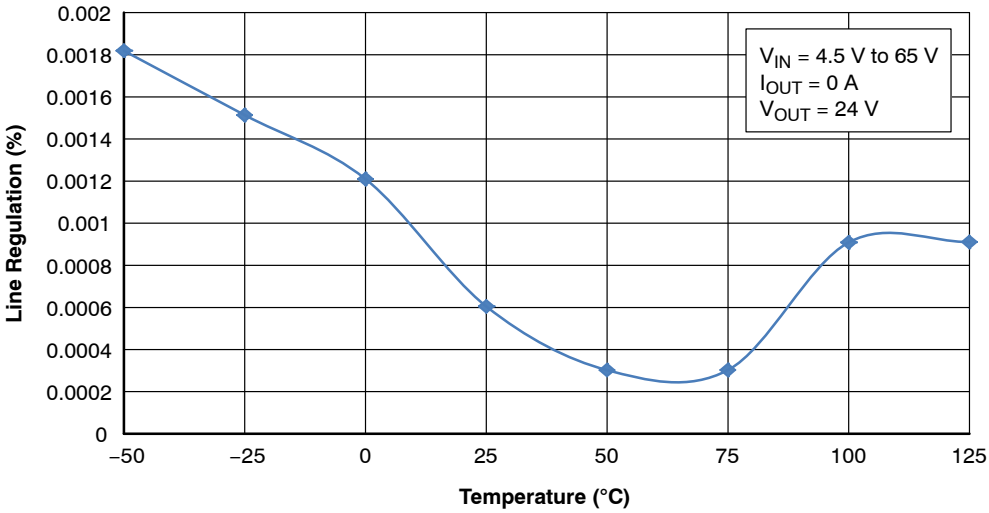

Figure 6. Line Regulation vs. Temperature

SCHEMATIC

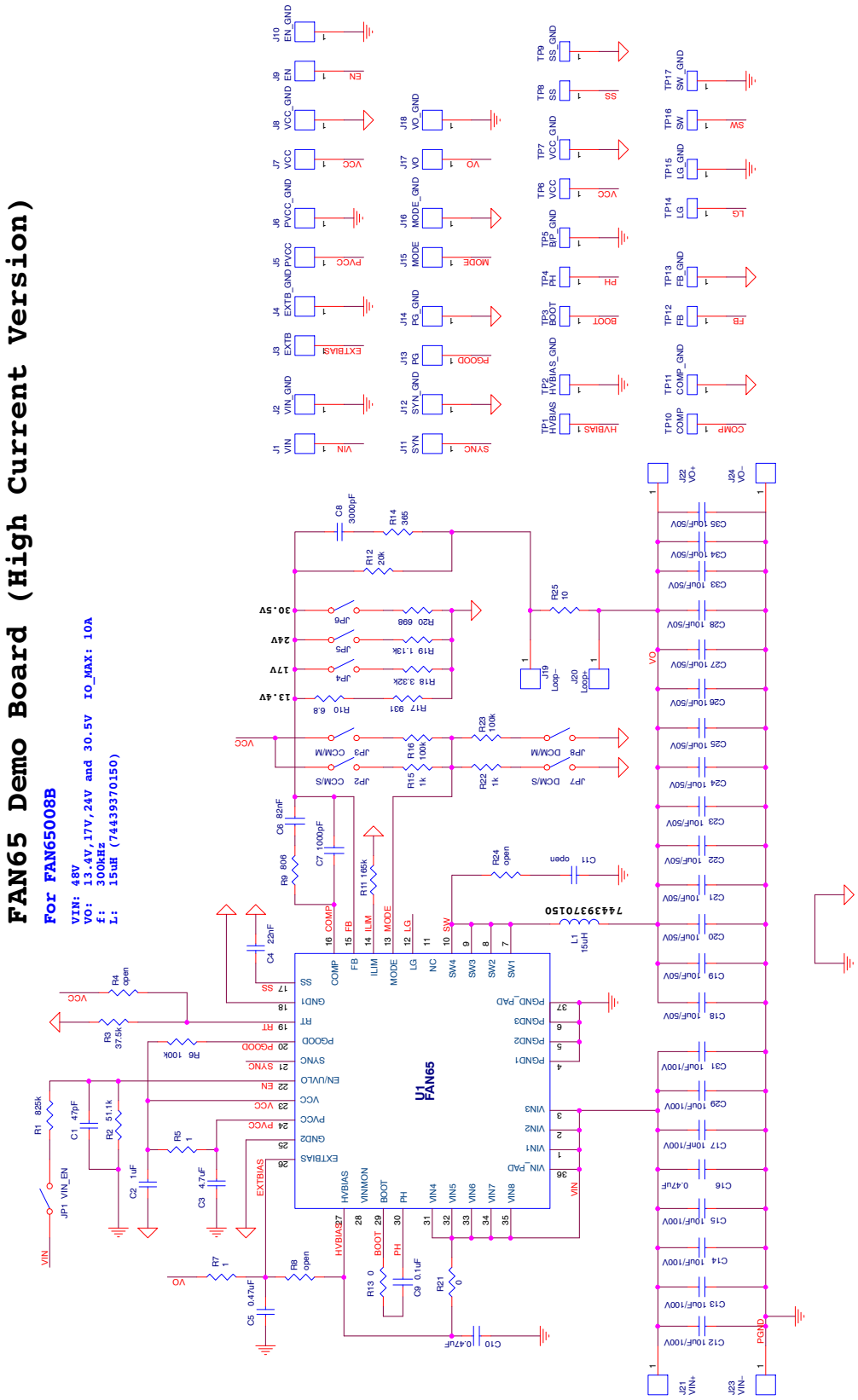

Figure 7. EVM Schematic

PCB LAYERS

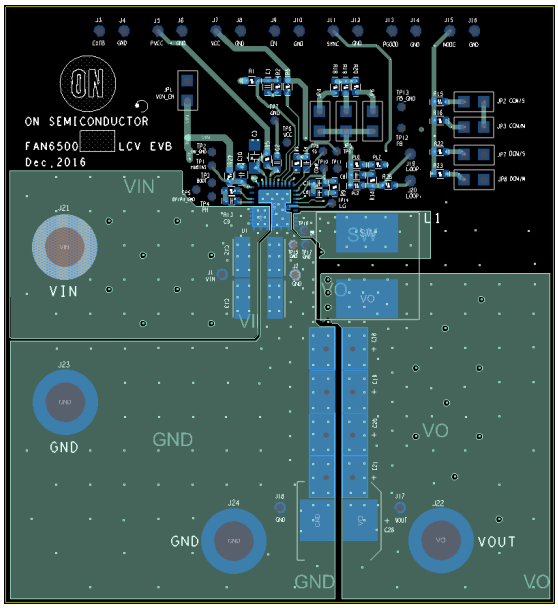

Figure 8. Top Layer

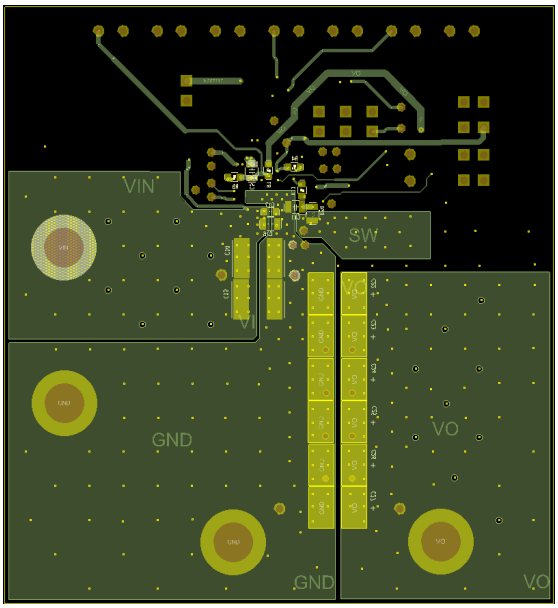

Figure 9. Bottom Layer

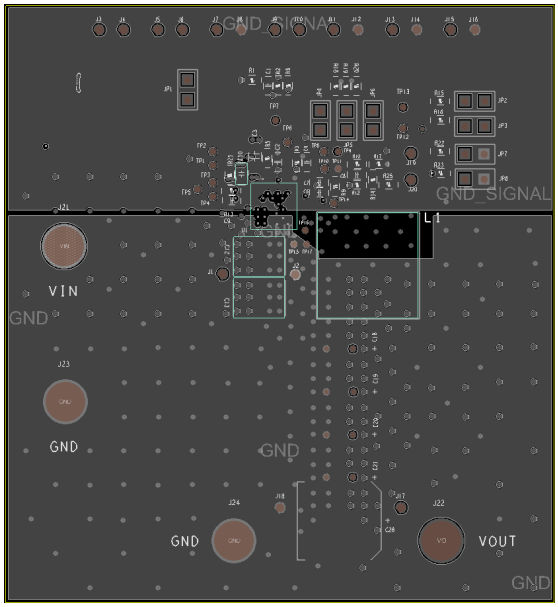

Figure 10. Inner Layer 1

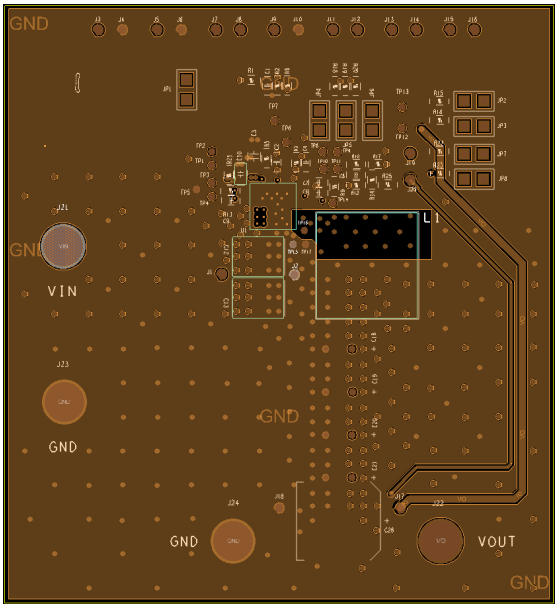

Figure 11. Inner Layer 2

BILL OF MATERIALS

Table 1. BILL OF MATERIALS

Item	Qty	Reference	Value	Voltage	PCB Footprint	Manufacturer Part Number	Part Number Preferred	TC	Manufacturer
1	1	C1	47 pF	50 V	603	06035C470KAT2A		X7R	AVX
2	1	C2	1 μF	10 V	603	GRM188R71A105KA61D		X7R	Murata
3	1	C3	4.7 μF	10 V	612	GRM31CR71A475KA01L		X7R	Murata
4	1	C4	22 nF	50 V	603	GRM188R71H223KA01D		X7R	Murata
5	2	C5, C10	0.47 μF	100 V	805	GRM21BR72A474KA73L		X7R	Murata
6	1	C6	82 nF	25 V	603	GRM188R71E823KA01D		X7R	Murata
7	1	C7	1 nF	50 V	603	GRM188R71H102KA01D		X7R	Murata
8	1	C8	3 nF	50 V	603	GRM1885C1H302JA01D		X7R	Murata
9	1	C9	0.1 μF	25 V	603	GRM188R71E104KA01D		X7R	Murata
10	1	C11	Open	100−200 V	805				
11	6	C12, C13, C14, C15, C29,C31	10 μF	100 V	2220	22201C106MAT2A		X7R	AVX
12	1	C16	0.47 μF	100 V	805	GRM21BR72A474KA73L		X7R	Murata
13	1	C17	10 nF	100 V	603	C1608X7R2A103K080AA	GRM188R72A103KA01	X7R	TDK
14	14	C18, C19, C20, C21, C22, C23, C24, C25, C26, C27, C28, C33, C34, C35	10 μF	50 V	1210	UMK325AB7106KM−T	GRM32ER71H106KA12	X7R	Taiyo Yuden
15	2	C30,C32	Open	100 V	2220				
16	1	JP1	VIN_EN		HEADER .100 SINGL STR 2POS	77311−818−02LF			Amphenol
17	1	JP2	CCM/S		HEADER .100 SINGL STR 2POS	77311−818−02LF			Amphenol
18	1	JP3	CCM/M		HEADER .100 SINGL STR 2POS	77311−818−02LF			Amphenol
19	1	JP4	17 V		HEADER .100 SINGL STR 2POS	77311−818−02LF			Amphenol
20	1	JP5	28 V		HEADER .100 SINGL STR 2POS	77311−818−02LF			Amphenol
21	1	JP6	30.5 V		HEADER .100 SINGL STR 2POS	77311−818−02LF			Amphenol
22	1	JP7	DCM/S		HEADER .100 SINGL STR 2POS	77311−818−02LF			Amphenol
23	1	JP8	DCM/M		HEADER .100 SINGL STR 2POS	77311−818−02LF			Amphenol
24	1	J1	VIN		SMALL RED TERM	151−207A−RC			Kobiconn
25	1	J2	VIN_GND		SMALL BLK TERM	151−203−RC			Kobiconn
26	1	J3	Open						
27	1	J4	Open						
28	1	J5	Open						
29	1	J6	PVCC_GND		0.043″ pin	3103−2−00−21−00−00−08−0			Mill−Max Manufacturing Corp.
30	1	J7	Open						
31	1	J8	Open						

Table 1. BILL OF MATERIALS (continued)

Item	Qty	Reference	Value	Voltage	PCB Footprint	Manufacturer Part Number	Part Number Preferred	TC	Manufacturer
32	1	J9	EN		0.043″ pin	3103−2−00−21−00−00−08−0			Mill−Max Manufacturing Corp.
33	1	J10	Open						
34	1	J11	Open						
35	1	J12	SYN_GND		0.043″ pin	3103−2−00−21−00−00−08−0			Mill−Max Manufacturing Corp.
36	1	J13	Open						
37	1	J14	Open						
38	1	J15	Open						
39	1	J16	Open						
40	1	J17	VO		SMALL RED TERM	151−207A−RC			Kobiconn
41	1	J18	VO_GND		SMALL BLK TERM	151−203−RC			Kobiconn
42	1	J19	Loop−		0.043″ pin	3103−2−00−21−00−00−08−0			Mill−Max Manufacturing Corp.
43	1	J20	Loop+		0.043″ pin	3103−2−00−21−00−00−08−0			Mill−Max Manufacturing Corp.
44	1	J21	VIN+		JACK	575−4			Keystone
45	1	J22	VO+		JACK	575−4			Keystone
46	1	J23	VIN−		JACK	575−4			Keystone
47	1	J24	VO−		JACK	575−4			Keystone
48	1	L1	15 μH		0.73″ x 0.73″	74439370150			Wurth
49	1	R1	825 kΩ		603	RC0603FR−07825KL			Yageo
50	1	R2	51.1 kΩ		603	RC0603FR−0751K1L			Yageo
51	1	R3	37.5 kΩ		603	RC0603FR−0737K4L			Yageo
52	1	R13, R21	0 Ω		603	RC0603JR−070RL			Yageo
53	3	R5, R7	1 Ω		603	RC0603FR−071RL			Yageo
54	3	R6, R16, R23	100 kΩ		603	RC0603FR−07100KL			Yageo
55	3	R4, R8, R24	Open		603				
56	1	R9	806 Ω		603	RC0603FR−07806RL			Yageo
57	1	R10	6,8 Ω		603	RC0603FR−076R81L			Yageo
58	1	R11	165 kΩ		603	RC0603FR−07165KL			Yageo
59	1	R12	20 kΩ		603	RC0603FR−0720KL			Yageo
60	1	R14	365 Ω		603	RC0603FR−07365RL			Yageo
61	2	R15, R22	1 kΩ		603	RC0603FR−071KL			Yageo
62	1	R17	931 Ω		603	RC0603FR−07931RL			Yageo
63	1	R18	3.32 kΩ		603	RC0603FR−073K32L			Yageo
64	1	R19	1.13 kΩ		603	RC0603FR−071K13L			Yageo
65	1	R20	698 Ω		603	RT0603BRD07690RL			Yageo
66	1	R25	10 Ω		603	RC0603FR−0710RL			Yageo
67	1	TP1	Open						
68	1	TP2	Open						
69	1	TP3	Open						
70	1	TP4	Open						
71	1	TP5	Open						
72	1	TP6	Open						

Table 1. BILL OF MATERIALS (continued)

Item	Qty	Reference	Value	Voltage	PCB Footprint	Manufacturer Part Number	Part Number Preferred	TC	Manufacturer
73	1	TP7	Open						
74	1	TP8	Open						
75	1	TP9	Open						
76	1	TP10	Open						
77	1	TP11	Open						
78	1	TP12	Open						
79	1	TP13	Open						
80	1	TP14	Open						
81	1	TP15	Open						
82	1	TP16	SW		HEADER .100 SINGL STR 1POS	77311−818−01LF			Amphenol
83	1	TP17	Open						
84	1	U1	FAN65008B	65 V	MLP6x6	FAN65008B			ON Semiconductor

ADDITIONAL INFORMATION

TECHNICAL PUBLICATIONS:
Technical Library: www.onsemi.com/design/resources/technical−documentation
onsemi Website: www.onsemi.com

ONLINE SUPPORT: www.onsemi.com/support
For additional information, please contact your local Sales Representative at www.onsemi.com/support/sales