NCV7544 FLEXMOS™ Quad Half-Bridge MOSFET Pre-driver Evaluation Board User's Manual

ON Semiconductor®

www.onsemi.com

EVAL BOARD USER'S MANUAL

NCV7544VTFS5C466GEVB

Introduction

This document describes the NCV7544 evaluation board for the ON Semiconductor NCV7544 4−channel FLEXMOS MOSFET pre−driver. The functionality and major parameters can be evaluated with the NCV7544 evaluation board.

The NCV7544 programmable four channel half−bridge MOSFET pre−driver is one of a family of FLEXMOS automotive grade products for driving logic−level N−channel MOSFETs. The product is controllable by a combination of CMOS−compatible serial SPI and parallel inputs. The FLEXMOS family of products offers application scalability through choice of external MOSFETs.

Evaluation Board Features

- Four half−bridges for motor control
- Reverse protection and safety switch
- Power MOSFETs in u8FL package
- On−board +5 V LDO
- MCU with USB interface
- On−board current sense shunt resistors and current amplifiers
- Good thermal connection of the power MOSFETs allowing high current capability
- Oscilloscope test−points on all important signals
- M4 screw connectors for power signals (battery, ground, outputs)
- Switches and potentiometers for Standalone mode operation
- LEDs for diagnostics
- One−row pin header, providing the circuit signals, enables easy insertion of the evaluation board into a more complex application setup

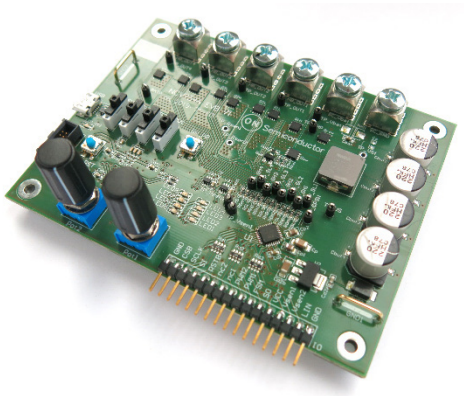

Figure 1. NCV7544VTFS5C466GEVB

© Semiconductor Components Industries, LLC, 2020

October, 2020 − Rev. 0

Publication Order Number:
EVBUM2770/D

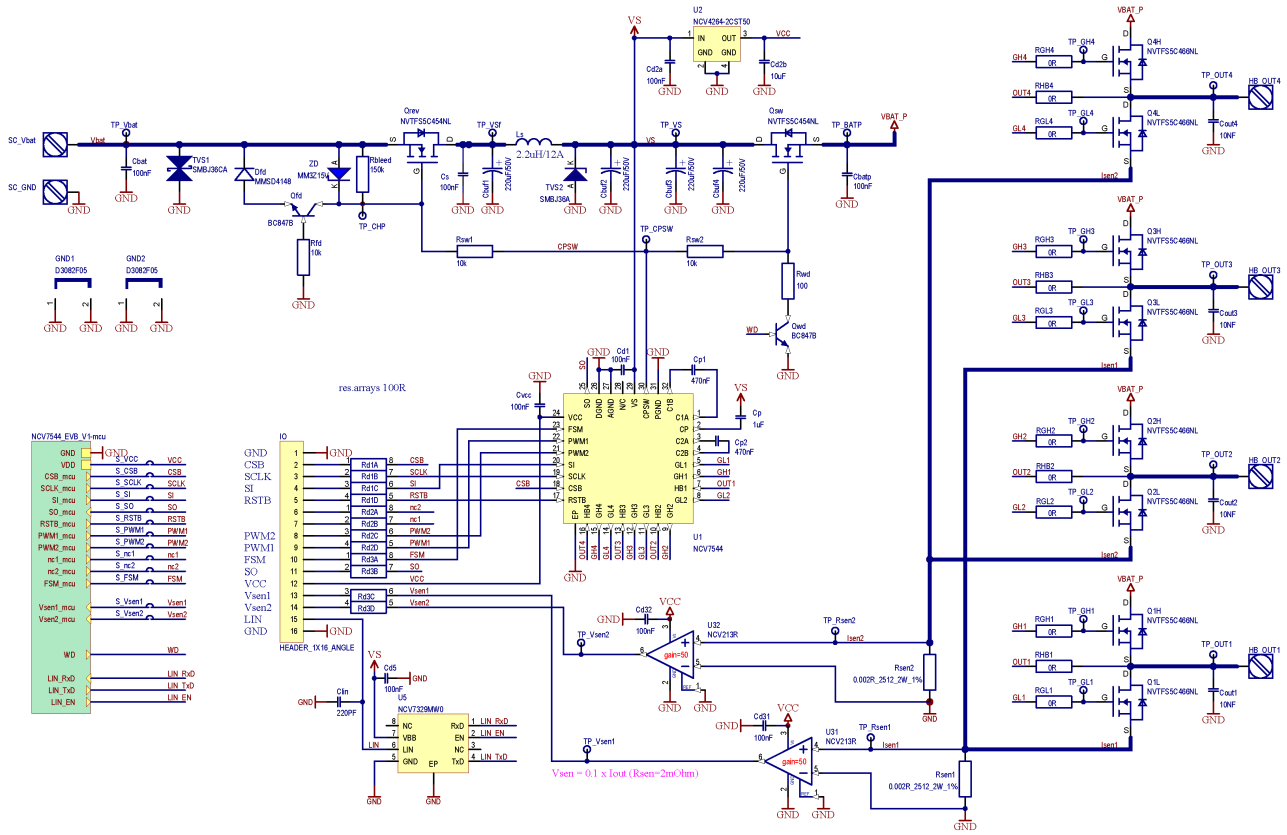

Figure 2. NCV7544 Evaluation Board Schematic – Application Part

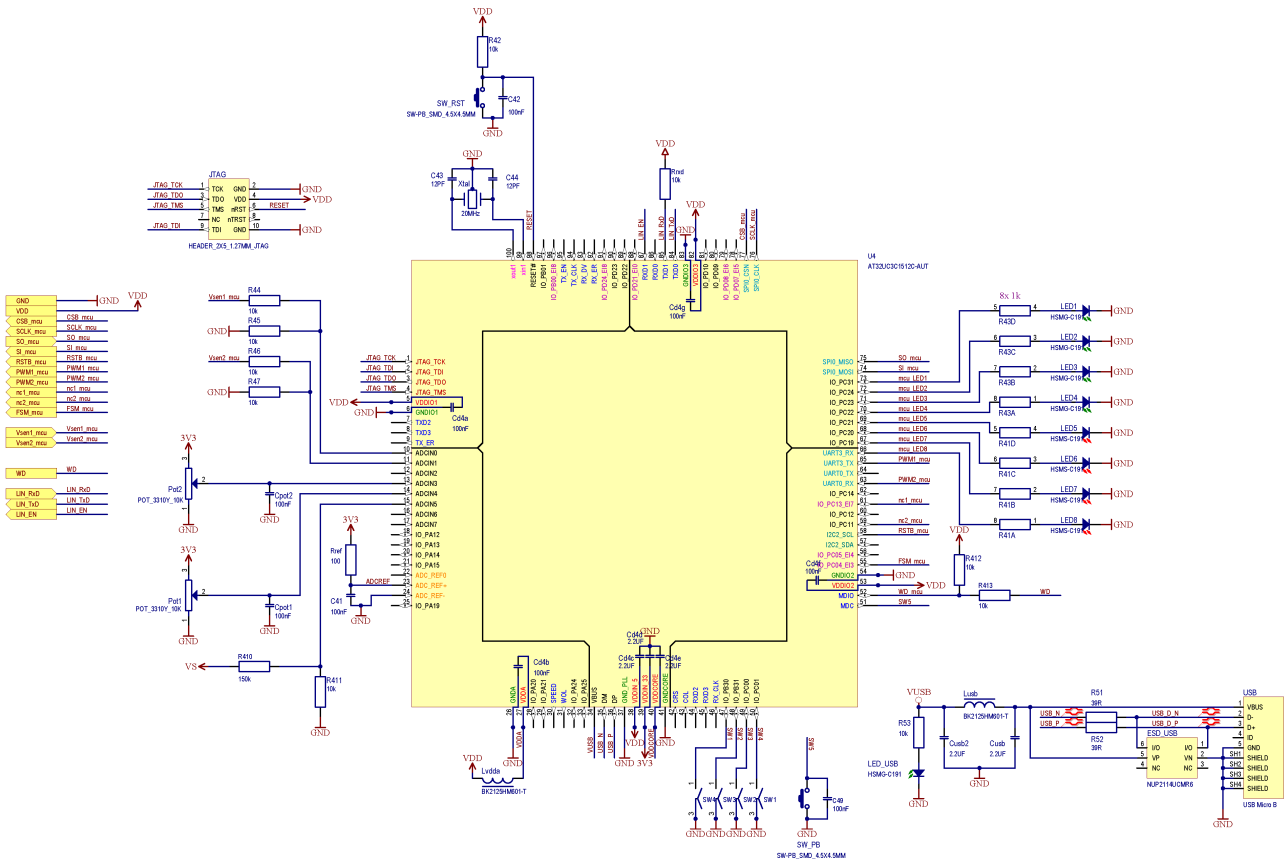

Figure 3. NCV7544 Evaluation Board Schematic – Control Part

Table 1. ABSOLUTE MAXIMUM RATINGS

Rating	External Pin	Min	Max	Unit
Power Supply Voltage	Vbat	−40	40	V
Digital Supply Voltage (On−board Supply)	VCC	−0.3	5.5	V
Digital Inputs/Outputs Voltage	CSB, SCLK, SI, SO, RSTB, PWM1−2	−0.3	VCC + 0.3	V
Current Sense Output Voltage	Vsen1−2	−0.3	VCC + 0.3	
Current Sense Output Current	Vsen1−2	Limited internally		A
H−bridge Outputs DC Voltage	HB_OUT1−4	−0.3	Vbat + 0.3	V
H−bridge Outputs DC Current	HB_OUT1−4	Limited internally		A
NCV7544 Junction Temperature	–	−40	+150	°C
Qrev, Qsw, QxH, QxL Junction Temperature	–	−55	+175	°C
Board Temperature	–	−40	+125	°C

Stresses exceeding those listed in the Maximum Ratings table may damage the device. If any of these limits are exceeded, device functionality should not be assumed, damage may occur and reliability may be affected.

Table 2. RECOMMENDED BOARD OPERATING CONDITIONS

Rating	External Pin	Min	Max	Unit
Power Supply Voltage	Vbat	7	18	V
Digital Supply Voltage	VCC	+5 V + 2% (on−board supply)		V
Digital Inputs/Outputs Voltage	CSB, SCLK, SI, SO, RSTB, PWM1−2	0	VCC	V
Current Sense Output Voltage	Vsen1−2	Generated internally		
Current Sense Output Current	Vsen1−2	Internally limited		A
H−bridge Outputs DC Voltage	HB_OUT1−4	0	Vbat	V
H−bridge Outputs DC Current	HB_OUT1−4	−10	10	A
NCV7544 Junction Temperature	–	−40	+150	°C
Qrev, Qsw, QxH, QxL Junction Temperature	–	−55	+175	°C
Board Temperature	–	−40	+105	°C

Functional operation above the stresses listed in the Recommended Operating Ranges is not implied. Extended exposure to stresses beyond the Recommended Operating Ranges limits may affect device reliability.

OPERATIONAL GUIDELINES

The evaluation board contains all the components necessary for NCV7544 application: half−bridge output MOSFETs, a control MCU, USB interface, +5 V LDO supply for NCV7544 logic, MCU and current sense amplifiers.

In addition, two potentiometers, four slide switches, a push button and four LEDs can be used to control the board. To demonstrate full functionality, a PC can be connected through a micro USB connector.

Alternatively, an external MCU can be connected through the IO connector to control all functions and settings of NCV7544.

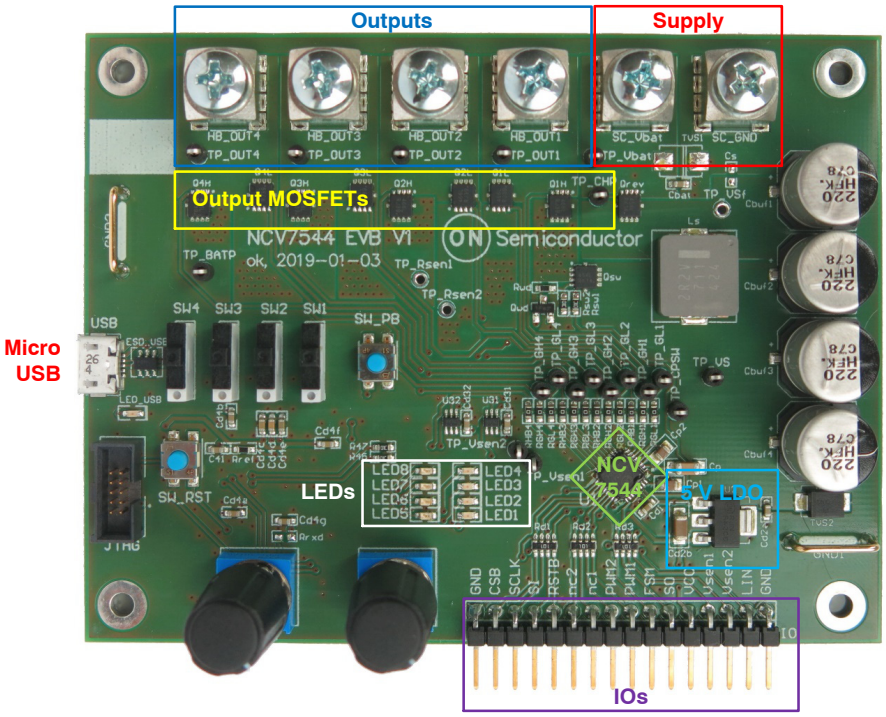

Figure 4. NCV7544 Evaluation Board Picture, Top Side

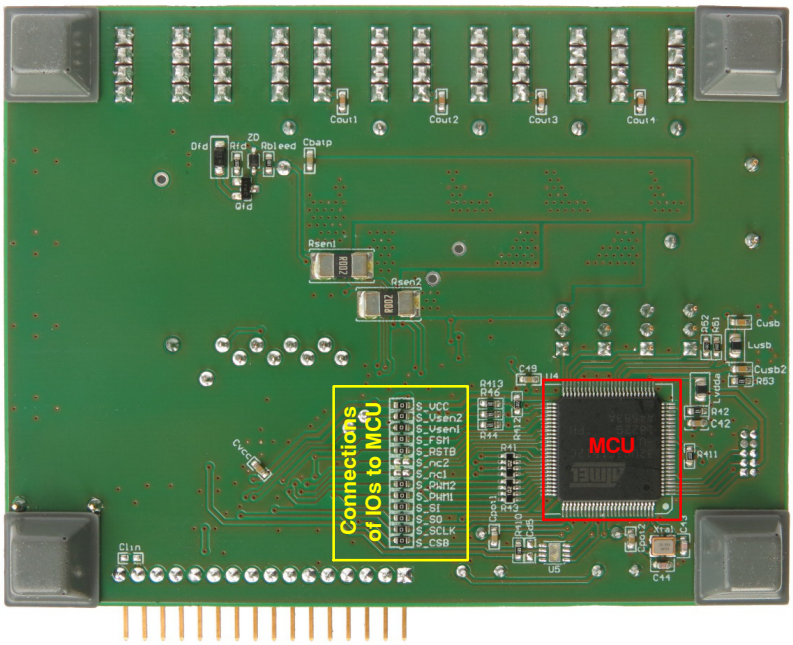

Figure 5. NCV7544 Evaluation Board Picture, Bottom Side

FUNCTIONAL DESCRIPTION

Power Supply

The output stage of NCV7544 pre−driver is supplied via VS pin. N−MOSFET Qrev ensures battery−reverse protection, while Qsw can disconnect the half−bridges' supply.

By default, half−bridges' power supply is buffered by four 220 μF capacitors covering high current peaks caused by the inrush current or PWM operation and absorbing energy stored in motor coils in case the supply voltage disappears.

Safety Features

In order to have full control over the loads, NCV7544 has integrated watchdog function. The microcontroller has to send a watchdog service periodically, otherwise NCV7544 enters the Fail−safe mode.

In addition, Qwd immediately pulls down Qrev and Qsw gates in case the microcontroller is reset.

The load current is limited internally to protect the MOSFETs and PCB. The MOSFETs activation time is limited if the maximum DC operational current is exceeded. The corresponding LED indicates an overload. After a cool−down time, the error has to be cleared by a SW_PB push−button.

Current Sensing Amplifiers

NCV7544 evaluation board contains three low−side sense resistors and operational amplifiers for the outputs current sensing.

The power MOSFETs type as well as sensing resistors' Rsen1−2 value are selected according to maximum application DC current. Higher current is possible for limited time as long as the junction and board temperatures are not exceeded.

The used dedicated current−sensing amplifier (NCV213R) has a fixed gain of 50 and the output is referenced to GND.

The resulting A−V ratio (with Rsen = 2 mΩ) is:

Vsen [V] = 0.1 x Iout [A]

GETTING STARTED

The board supports three ways of NCV7544 device control:

I. Standalone mode – PWM duty−cycle (motor speed) can be changed via on−board switches on two loads (motors).
II. PC control – the user has full control over NCV7544 settings using PC connected to the board via USB.
III. External MCU control – external MCU controls the all the NCV7544 settings directly via SPI and PWM1−2 pins. The on−board MCU has to be disconnected from these signals (S_xxx 0R resistors on the bottom side have to be removed).

Standalone Mode

1. Connect the loads to the screw bush connectors (see Figure 6). Supported loads are:
   a. A motor between HB_OUT1 and HB_OUT3
   b. A motor between HB_OUT2 and HB_OUT4
2. Connect the main supply (typ. 12 V) to "Vbat" and "GND" screw bush connectors (see Figure 6). The MCU starts in the Standalone mode automatically and NCV7544 is configured.
3. LED1 is on, other LEDs indicate NCV7544 status as listed in the table below.
4. SW1−4 and SW_PB have functions listed in the table below, Potentiometers Pot1 and Pot2 control the motors' speed.

Table 3. FUNCTIONS OF SWITCHES

Switch	Function	SW Down Position	SW Up Position
SW1	Motor direction	HB1 LS / HB3 HS	HB1 HS / HB3 LS
SW2	Motor direction	HB2 LS / HB4 HS	HB2 HS / HB4 LS
SW3	not used	–	–
SW4	not used	–	–
SW_PB	Error clear	–	–

Table 4. FUNCTIONS OF LEDS

LED	Function	Color
LED1	Standalone Mode	Green
LED2	Reserved	Green
LED3	Remote mode (USB Control)	Green
LED4	Firmware Flashing	Green
LED5	Overload	Red
LED6	Over−Current (SR0.HB_QSB)	Red
LED7	Charge Pump Low (SR0.CPL)	Red
LED8	Charge Pump Fail (SR0.CPF)	Red

To safely enter the Standalone mode from PC controlled mode, the supply of the board needs to be disconnected.

PC Control Mode

1. Install the PC software and wait for drivers' installation, if needed.
2. Connect loads to the bush connectors (see Figure 6).
3. Connect main supply to "Vbat" and "GND" bush connectors (see Figure 6).
4. Connect the board by a Micro−USB connector to a PC (see Figure 6).

5. Run NCV7544 EVB software.
6. In the startup frame select corresponding virtual COM port (see Figure 7). You may need click the Refresh button several times.
7. Click “Connect” button.
8. The software should connect to the board. If the connection was successful, “Basic” window opens and the Standalone mode is left, which is indicated by LED3 on.
9. The device SPI registers are reset and pre−defined values are loaded.
10. Several level of control abstractions are available through “Window” item in the menu bar.
11. “Basic” window (Figure 8) demonstrates simple control of two loads including direction and speed control. The translated commands are reflected in lower levels, down to SPI communication frames.
12. “Board” window (Figure 9) demonstrates application controls of two channels including device mode control, status readout, MCU PWM generators and load current measurements.
13. “HB Controller” (Figure 10) contains all the SPI settings grouped per output channel and MCU PWM generators.
14. “SPI Controller” (Figure 11) window provides direct access to all NCV7544 SPI registers.
15. “SPI Raw” window provides direct SPI communication without any limitation and free baud rate setting.
16. “Chip ID” window allows readout of NCV7544 ID Register.

Firmware Update

The board and PC software supports firmware updates through the USB. The update procedure is described in a separate document. The update is normally not necessary, the boards are delivered with programmed MCU.

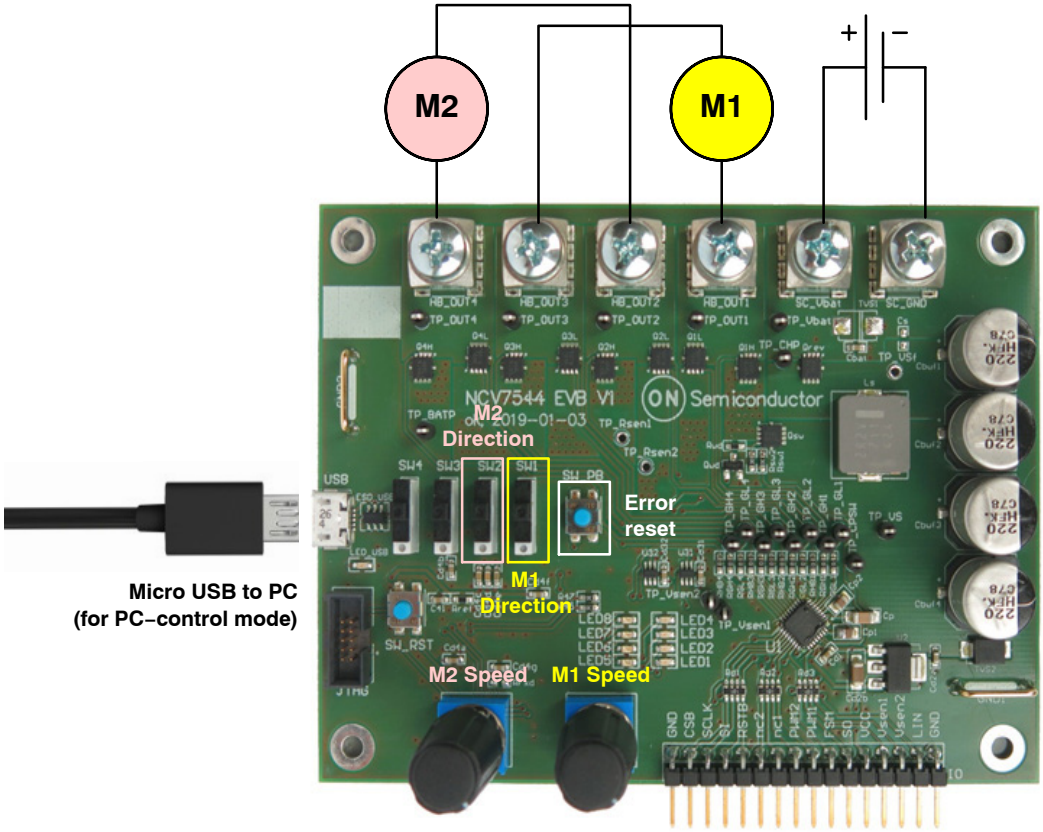

Figure 6. NCV7544 Evaluation Board Connections

Note

The PC software allows any combination of NCV7544 setting. Certain combination of pre−driver gate currents and timings may lead to damage of the MOSFETs. Please ensure the setting is correct and the temperature of the power MOSFETs and loads stays in the safe operating range.

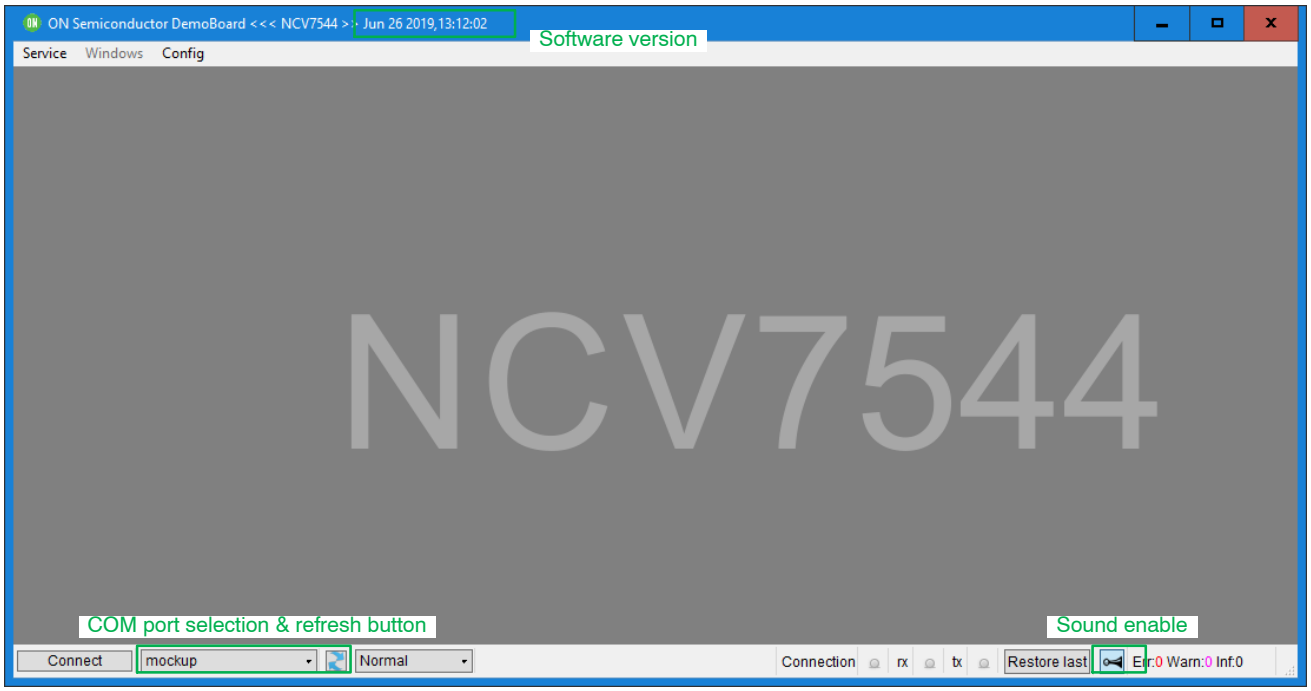

Figure 7. NCV7544 Controller Framework

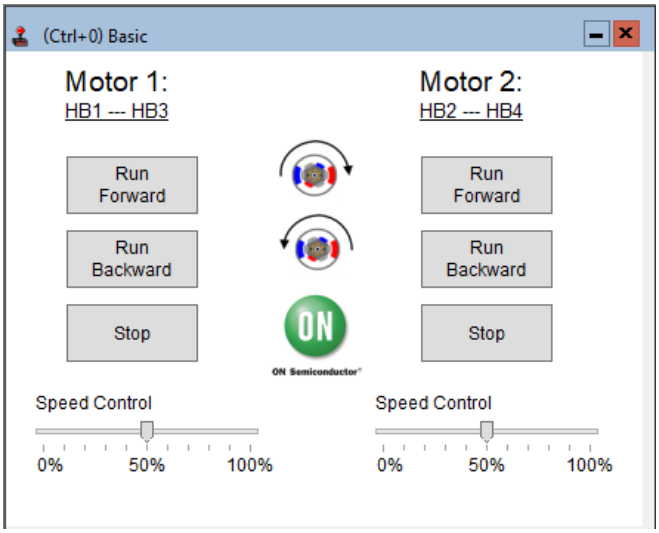

Figure 8. NCV7544 Controller Framework, Basic Window

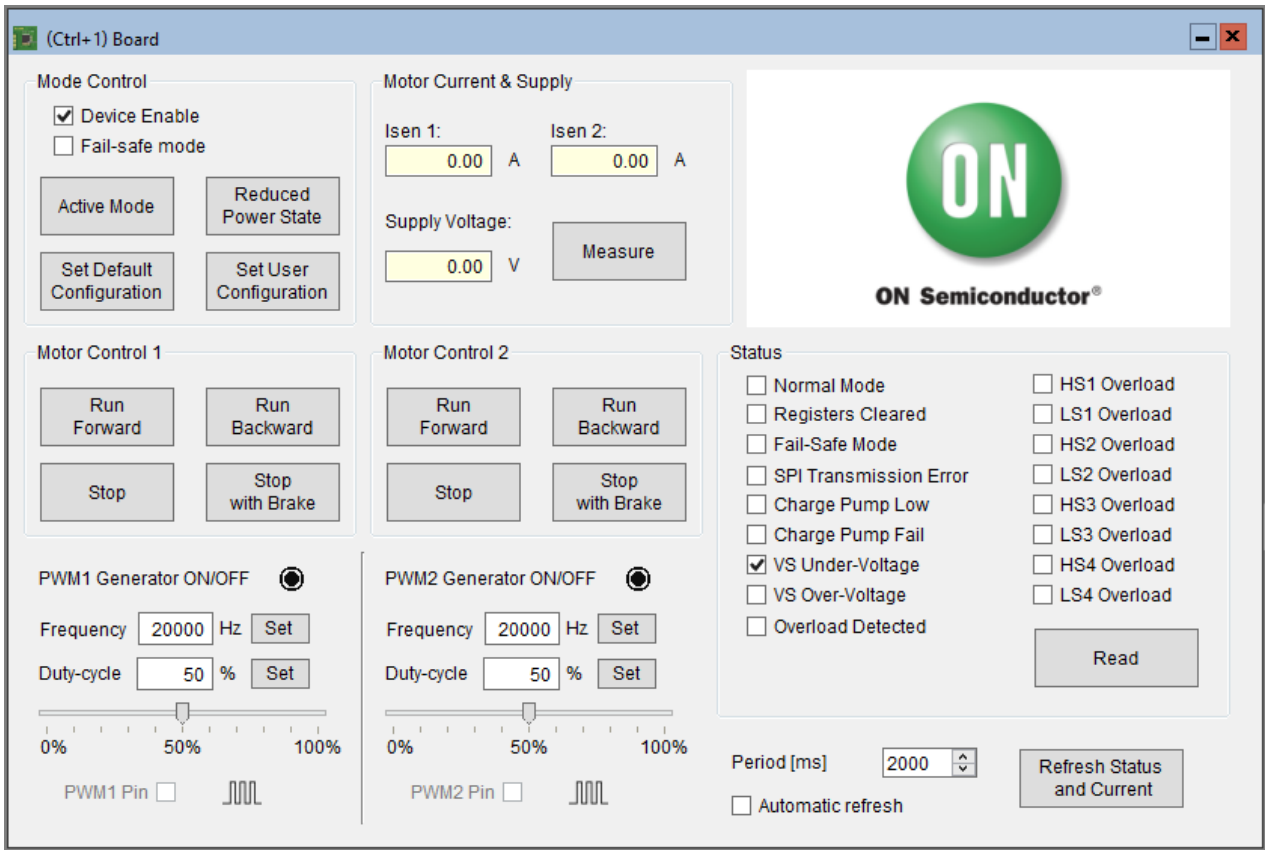

Figure 9. NCV7544 Controller Framework, Board Window

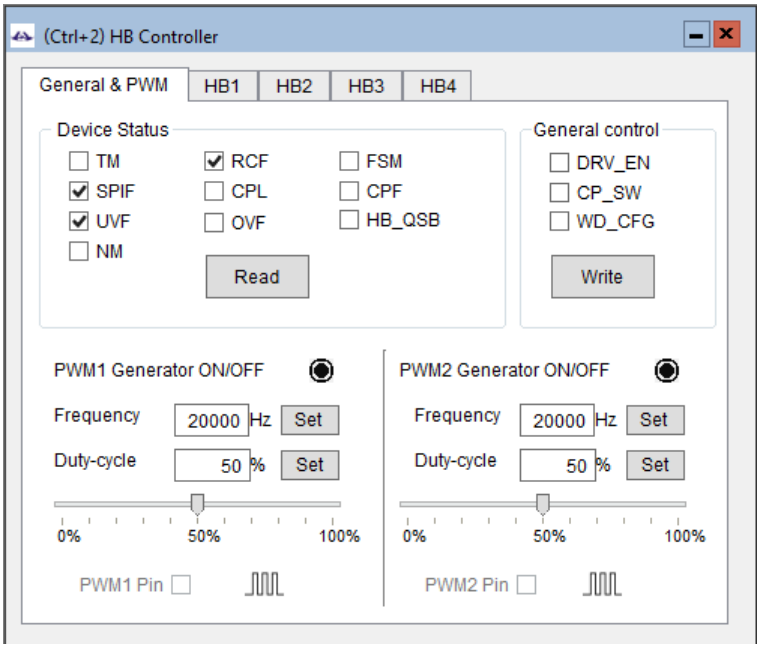

Figure 10. NCV7544 Controller Framework, HB Controller

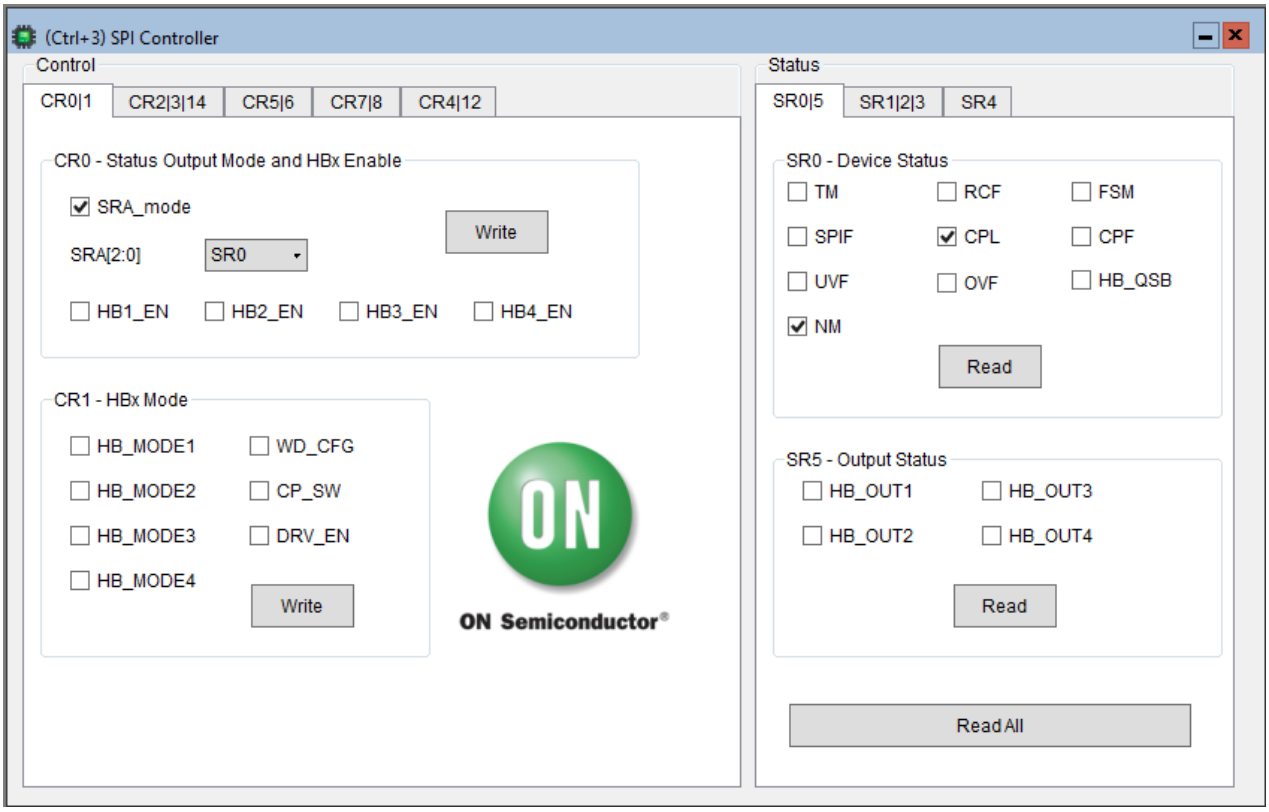

Figure 11. NCV7544 Controller Framework, SPI Controller

PCB DRAWINGS

Assembly Drawings

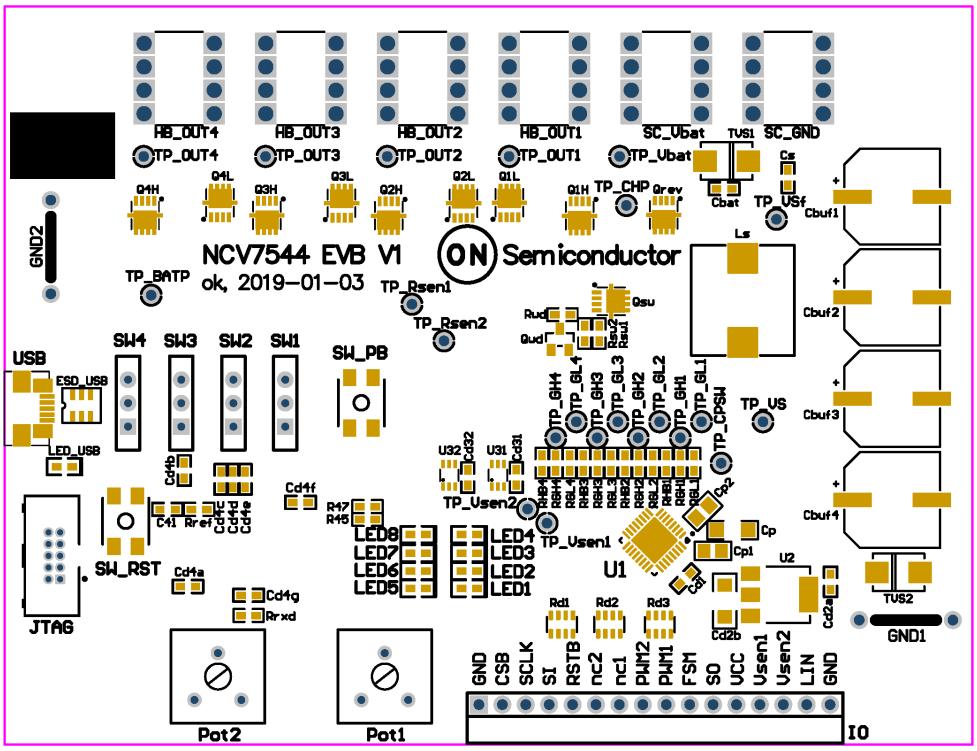

Figure 12. NCV7544 EVB PCB Top Assembly Drawing

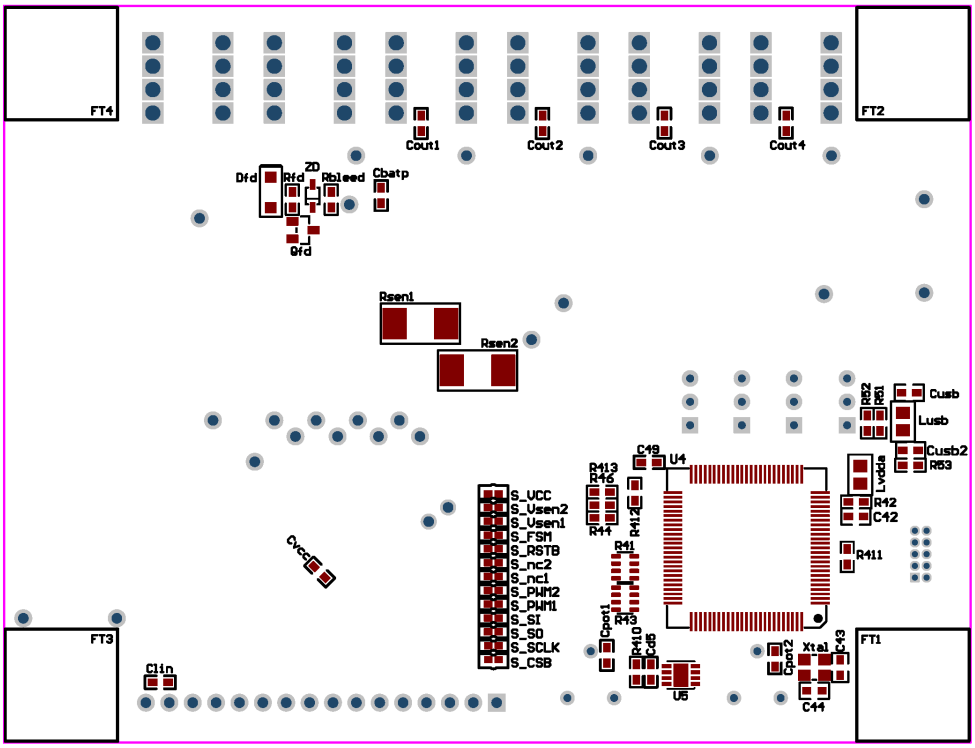

Figure 13. NCV7544 EVB PCB Bottom Assembly Drawing

Composite Drawings

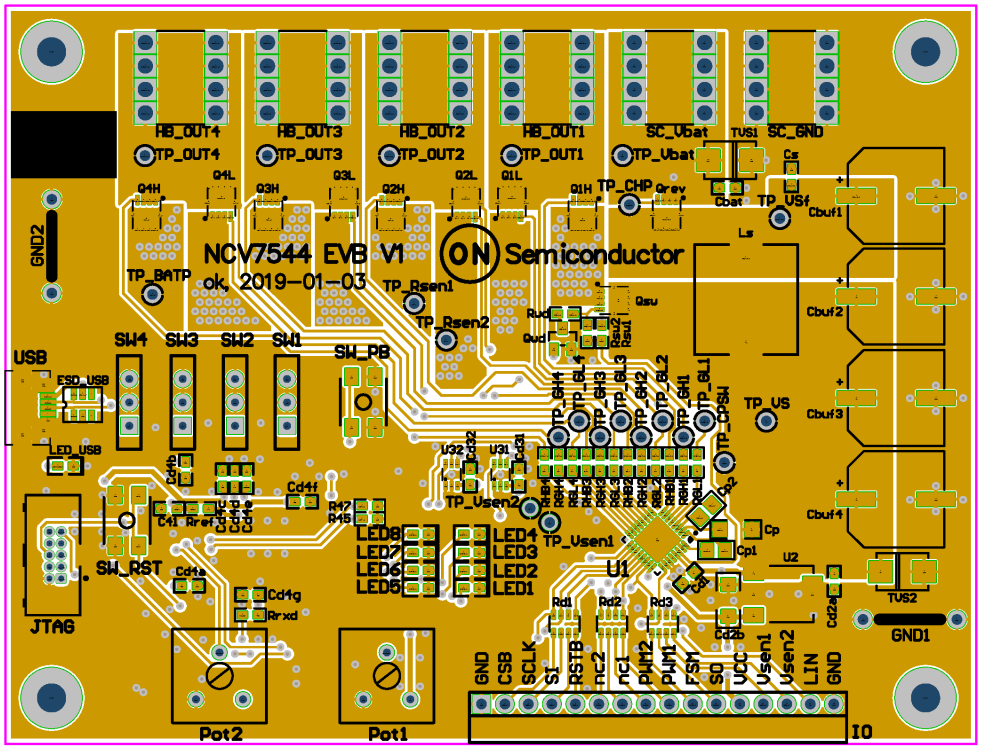

Figure 14. NCV7544 EVB PCB Top Composite Drawing

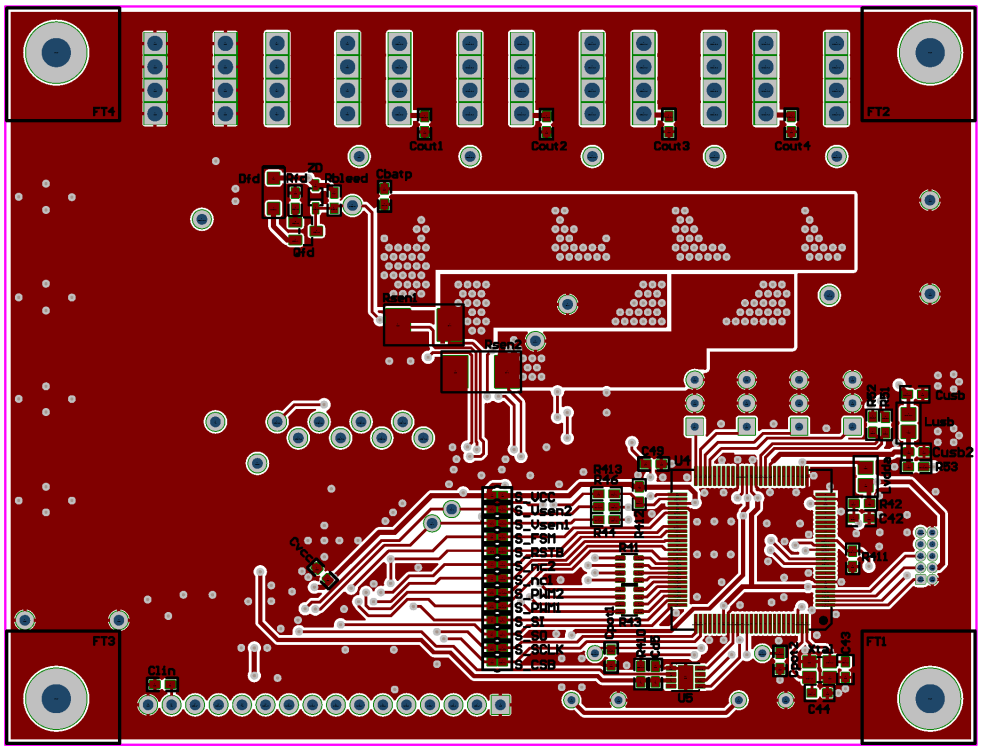

Figure 15. NCV7544 EVB PCB Bottom Composite Drawing

FLEXMOS is trademark of Semiconductor Components Industries, LLC (SCILLC) or its subsidiaries in the United States and/or other countries.

onsemi, onsemi, and other names, marks, and brands are registered and/or common law trademarks of Semiconductor Components Industries, LLC dba "**onsemi**" or its affiliates and/or subsidiaries in the United States and/or other countries. **onsemi** owns the rights to a number of patents, trademarks, copyrights, trade secrets, and other intellectual property. A listing of **onsemi**'s product/patent coverage may be accessed at www.onsemi.com/site/pdf/Patent−Marking.pdf. **onsemi** is an Equal Opportunity/Affirmative Action Employer. This literature is subject to all applicable copyright laws and is not for resale in any manner.

The evaluation board/kit (research and development board/kit) (hereinafter the "board") is not a finished product and is not available for sale to consumers. The board is only intended for research, development, demonstration and evaluation purposes and will only be used in laboratory/development areas by persons with an engineering/technical training and familiar with the risks associated with handling electrical/mechanical components, systems and subsystems. This person assumes full responsibility/liability for proper and safe handling. Any other use, resale or redistribution for any other purpose is strictly prohibited.

THE BOARD IS PROVIDED BY ONSEMI TO YOU "AS IS" AND WITHOUT ANY REPRESENTATIONS OR WARRANTIES WHATSOEVER. WITHOUT LIMITING THE FOREGOING, ONSEMI (AND ITS LICENSORS/SUPPLIERS) HEREBY DISCLAIMS ANY AND ALL REPRESENTATIONS AND WARRANTIES IN RELATION TO THE BOARD, ANY MODIFICATIONS, OR THIS AGREEMENT, WHETHER EXPRESS, IMPLIED, STATUTORY OR OTHERWISE, INCLUDING WITHOUT LIMITATION ANY AND ALL REPRESENTATIONS AND WARRANTIES OF MERCHANTABILITY, FITNESS FOR A PARTICULAR PURPOSE, TITLE, NON−INFRINGEMENT, AND THOSE ARISING FROM A COURSE OF DEALING, TRADE USAGE, TRADE CUSTOM OR TRADE PRACTICE.

onsemi reserves the right to make changes without further notice to any board.

You are responsible for determining whether the board will be suitable for your intended use or application or will achieve your intended results. Prior to using or distributing any systems that have been evaluated, designed or tested using the board, you agree to test and validate your design to confirm the functionality for your application. Any technical, applications or design information or advice, quality characterization, reliability data or other services provided by **onsemi** shall not constitute any representation or warranty by **onsemi**, and no additional obligations or liabilities shall arise from **onsemi** having provided such information or services.

onsemi products including the boards are not designed, intended, or authorized for use in life support systems, or any FDA Class 3 medical devices or medical devices with a similar or equivalent classification in a foreign jurisdiction, or any devices intended for implantation in the human body. You agree to indemnify, defend and hold harmless **onsemi**, its directors, officers, employees, representatives, agents, subsidiaries, affiliates, distributors, and assigns, against any and all liabilities, losses, costs, damages, judgments, and expenses, arising out of any claim, demand, investigation, lawsuit, regulatory action or cause of action arising out of or associated with any unauthorized use, even if such claim alleges that **onsemi** was negligent regarding the design or manufacture of any products and/or the board.

This evaluation board/kit does not fall within the scope of the European Union directives regarding electromagnetic compatibility, restricted substances (RoHS), recycling (WEEE), FCC, CE or UL, and may not meet the technical requirements of these or other related directives.

FCC WARNING − This evaluation board/kit is intended for use for engineering development, demonstration, or evaluation purposes only and is not considered by **onsemi** to be a finished end product fit for general consumer use. It may generate, use, or radiate radio frequency energy and has not been tested for compliance with the limits of computing devices pursuant to part 15 of FCC rules, which are designed to provide reasonable protection against radio frequency interference. Operation of this equipment may cause interference with radio communications, in which case the user shall be responsible, at its expense, to take whatever measures may be required to correct this interference.

onsemi does not convey any license under its patent rights nor the rights of others.

LIMITATIONS OF LIABILITY: **onsemi** shall not be liable for any special, consequential, incidental, indirect or punitive damages, including, but not limited to the costs of requalification, delay, loss of profits or goodwill, arising out of or in connection with the board, even if **onsemi** is advised of the possibility of such damages. In no event shall **onsemi**'s aggregate liability from any obligation arising out of or in connection with the board, under any theory of liability, exceed the purchase price paid for the board, if any.

The board is provided to you subject to the license and other terms per **onsemi**'s standard terms and conditions of sale. For more information and documentation, please visit www.onsemi.com.

ADDITIONAL INFORMATION

TECHNICAL PUBLICATIONS:
Technical Library: www.onsemi.com/design/resources/technical−documentation
onsemi Website: www.onsemi.com

ONLINE SUPPORT: www.onsemi.com/support
For additional information, please contact your local Sales Representative at www.onsemi.com/support/sales