NCP51100 EVB

Single 2A Low-Side Gate Driver Evaluation Board User's Manual

ON Semiconductor®

www.onsemi.com

EVAL BOARD USER'S MANUAL

Introduction

This user guide supports the evaluation board for the NCP51100. It should be used in conjunction with the NCP51100 datasheets as well as ON's application notes and technical support team. Please visit ON's website at www.onsemi.com.

This document describes a proposed solution for the high speed dual gate driver using the NCP51100. This user's guide also includes information regarding operating procedures, input/output connections, an electrical schematic, printed circuit board (PCB) layout, and a bill of material (BOM) for the evaluation board.

Description

The NCP51100 2 A gate driver is designed to drive an N−channel enhancement−mode MOSFET in low −side switching applications by providing high peak current pulses during the short switching intervals. The driver is available with TTL input thresholds. Internal circuitry provides an under−voltage lockout function by holding the output LOW until the supply voltage is within the operating range. The NCP51100 delivers fast MOSFET switching performance, which helps maximize efficiency in high frequency power converter designs. NCP51100 drivers incorporate MillerDrive™ architecture for the final output stage. This bipolar−MOSFET combination provides high peak current during the Miller plateau stage of the MOSFET turn−on / turn−off process to minimize switching loss, while providing rail−to−rail voltage swing and reverse current capability. The NCP51100 is available in industry standard, 5−pin, SOT23.

Key Features

- Industry−Standard Pinouts
- 11 V to 18 V Operating Range
- 3 A Peak Sink/Source at VDD = 12 V
- 2.5 A Sink / 1.8 A Source at VOUT = 6 V
- 14 ns / 7 ns Typical Rise/Fall Times (1 nF Load)
- Under 20 ns Typical Propagation Delay Time
- MillerDrive™ Technology
- 5−Lead SOT23 Package
- Rated from –40°C to +125°C Ambient

Typical Applications

- Switch−Mode Power Supplies
- High−Efficiency MOSFET Switching
- Synchronous Rectifier Circuits
- DC−to−DC Converters
- Motor Control

Figure 1. Evaluation Board Picture

PIN CONNECTIONS

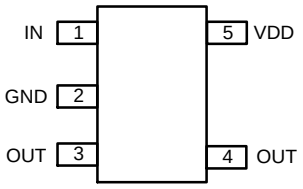

(Top View)

FUNCTIONAL BLOCK DIAGRAM

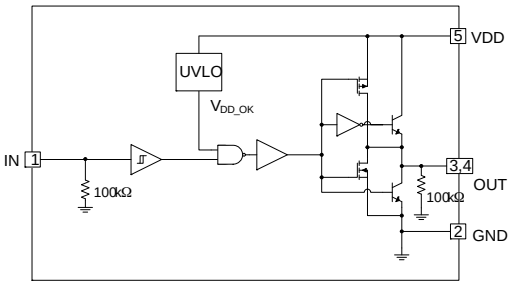

© Semiconductor Components Industries, LLC, 2021

June, 2021 − Rev. 0

Publication Order Number:
EVBUM2801/D

Schematic

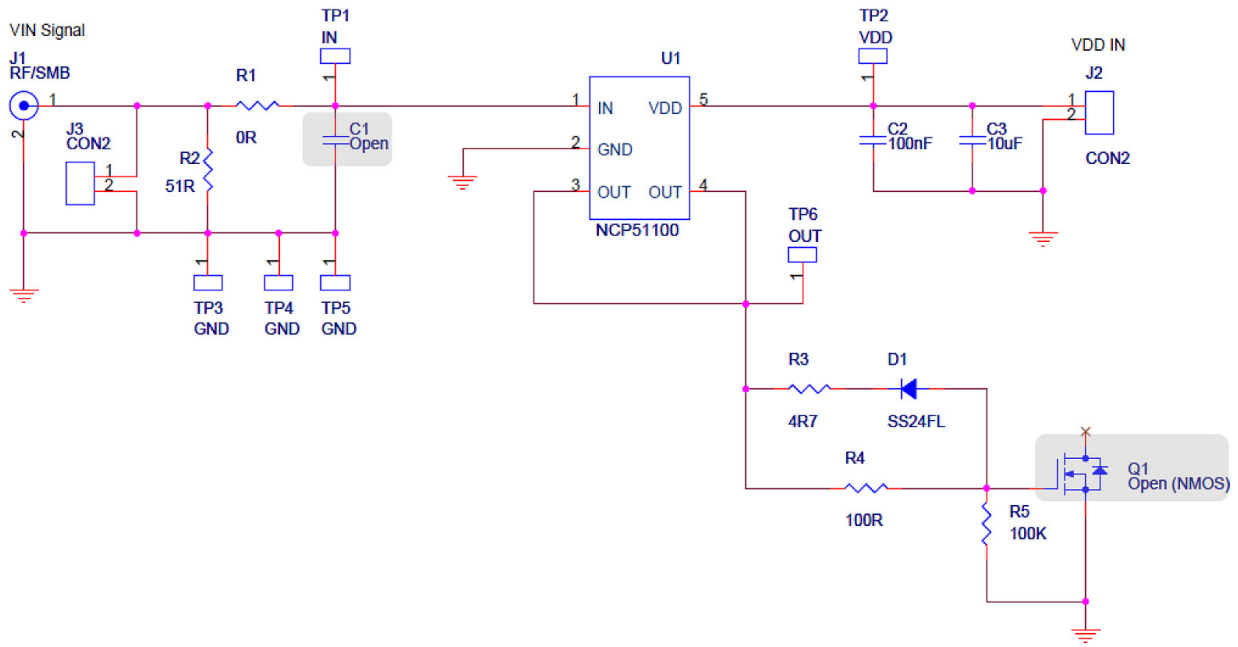

Figure 2. EVB Schematic

Description of Connectors & Test Points

The Table 1 and Table 2 show the description for connectors and test points.

GND is a common ground reference for intput and output circuits.

Table 1. DESCRIPTION OF CONNECTORS

Connector	Pin #	Name	Description	Note
J1	1	VIN	Singal Input (Non−inverting)	
	2	GND	Ground	
J2	1	VDD	Supply Voltage	
	2	GND	Ground	
J3	1	VIN	Singal Input (Non−inverting)	
	2	GND	Ground	

Table 2. DESCRIPTION OF TEST POINTS

TP #	Name	Description	Note
1	IN	Singal Input (Non−inverting)	
2	VDD	Supply Voltage	
3	OUT	Gate Drive Output	
4	GND	Ground	
5	GND	Ground	
6	GND	Ground	

Bench Test Method

The Figure 3 describes the connection for bench test to evaluate NCP51100 EVB

The method for bench test is as the following:

- Connect VDD and GND to 12V power supply
- Connect IN to pulse generator
- Connect TP1 and TP6 to oscilloscope to measure input and output waveform
- Turn on 12 V power supply
- Turn on pulse generator (5V 100khz 50% duty)
- **Measure TP1 and TP6 waveform**: 12 V 100 kHz 50% duty
- Turn off pulse generator
- Turn off power supply

NOTE: The length of wire affects delay time from input to output signal.

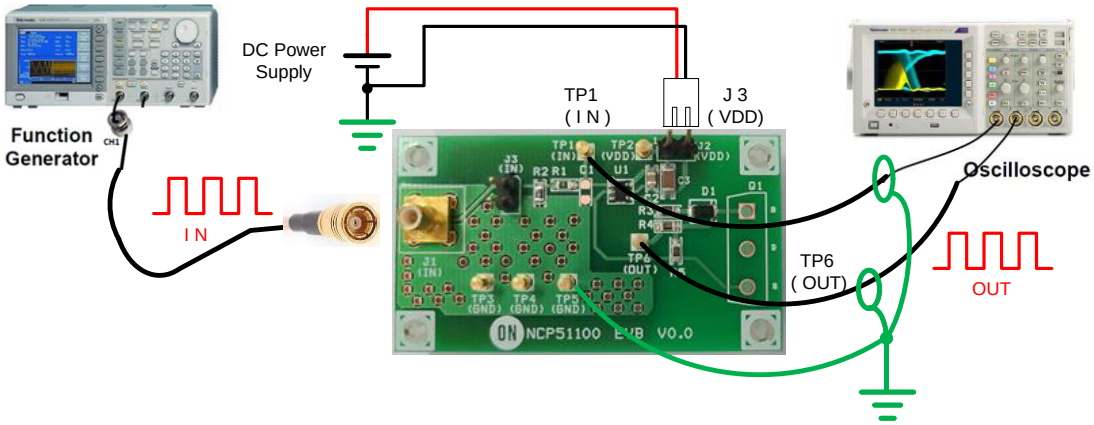

Figure 3. Connection for Bench Test

Waveforms

1. The measured waveforms of inputs and outputs are shown in Figures 6, 7, 8 and 9.
2. The definition for switching waveform timing chart are described in the Figure 4 and Figure 5.

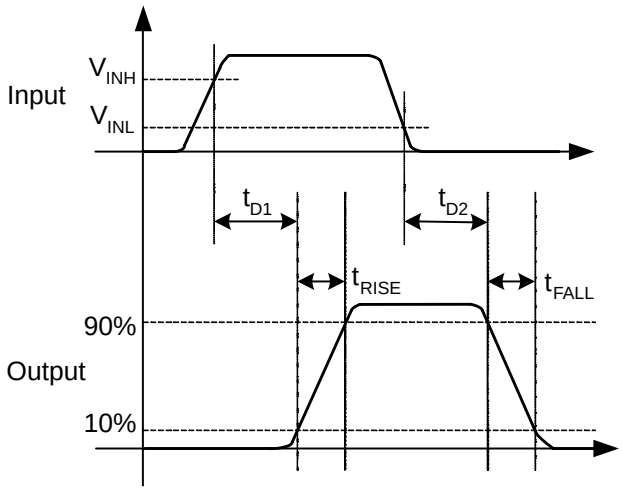

Figure 4. Switching Waveform Definitions

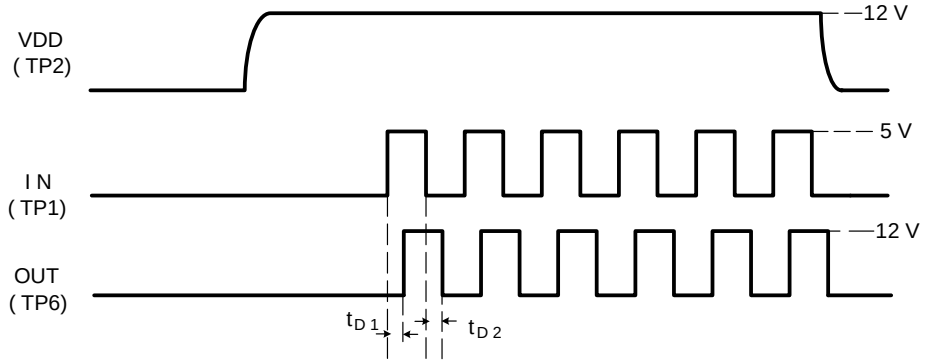

Figure 5. Timing Charts

.

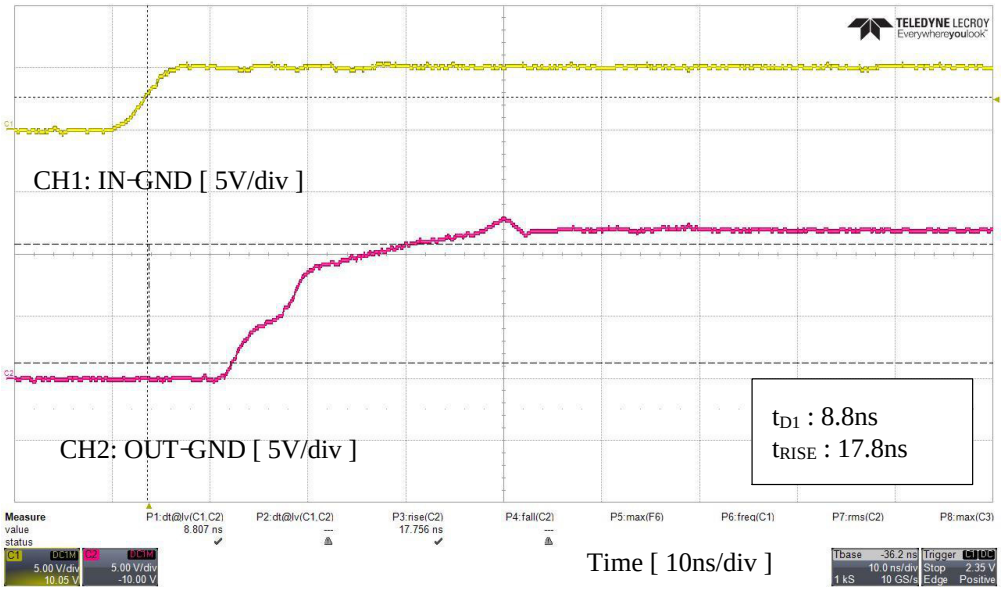

Figure 6. Turn On Waveforms

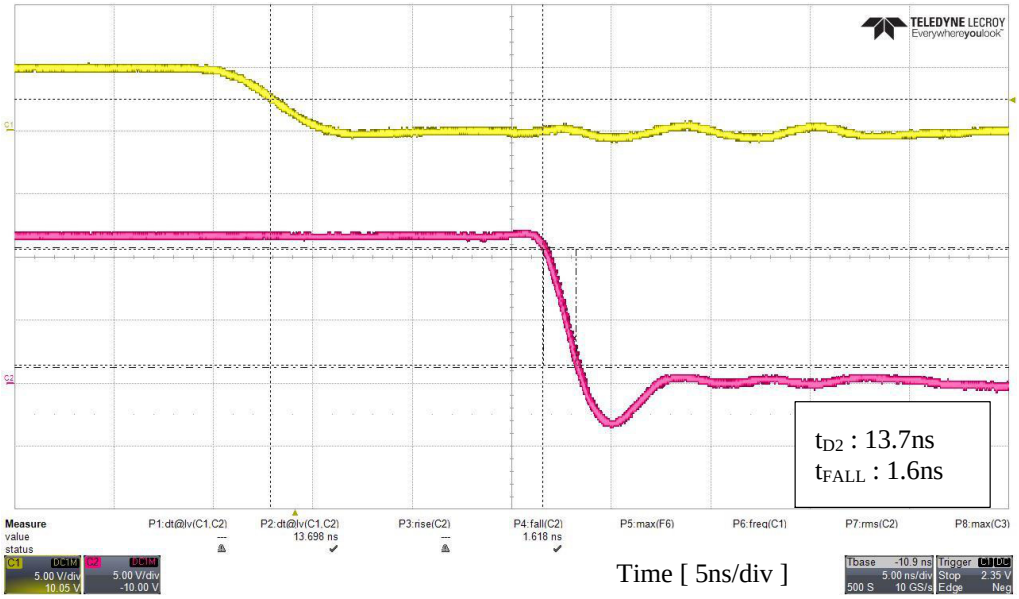

Figure 7. Turn Off Waveforms

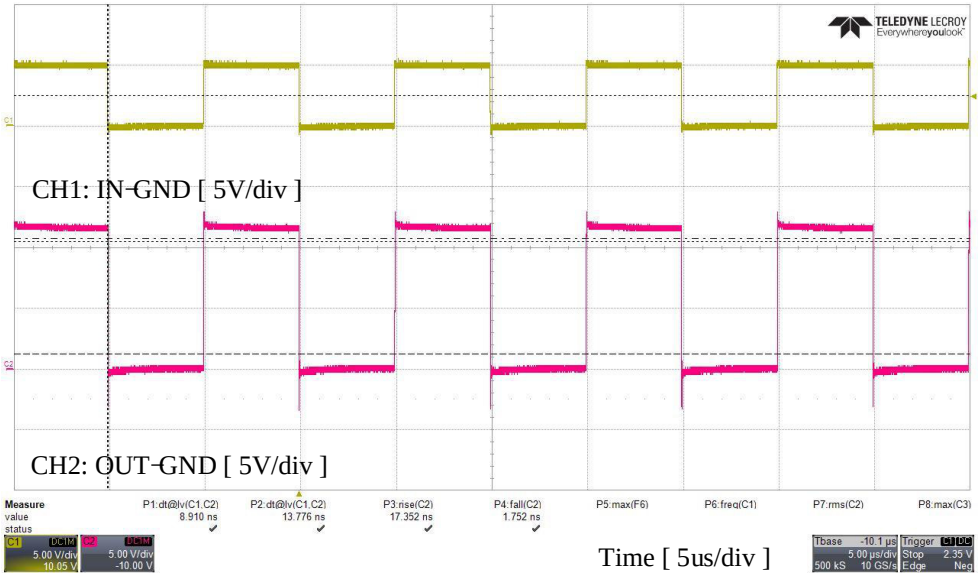

Figure 8. Waveforms @ 100 kHz Switching

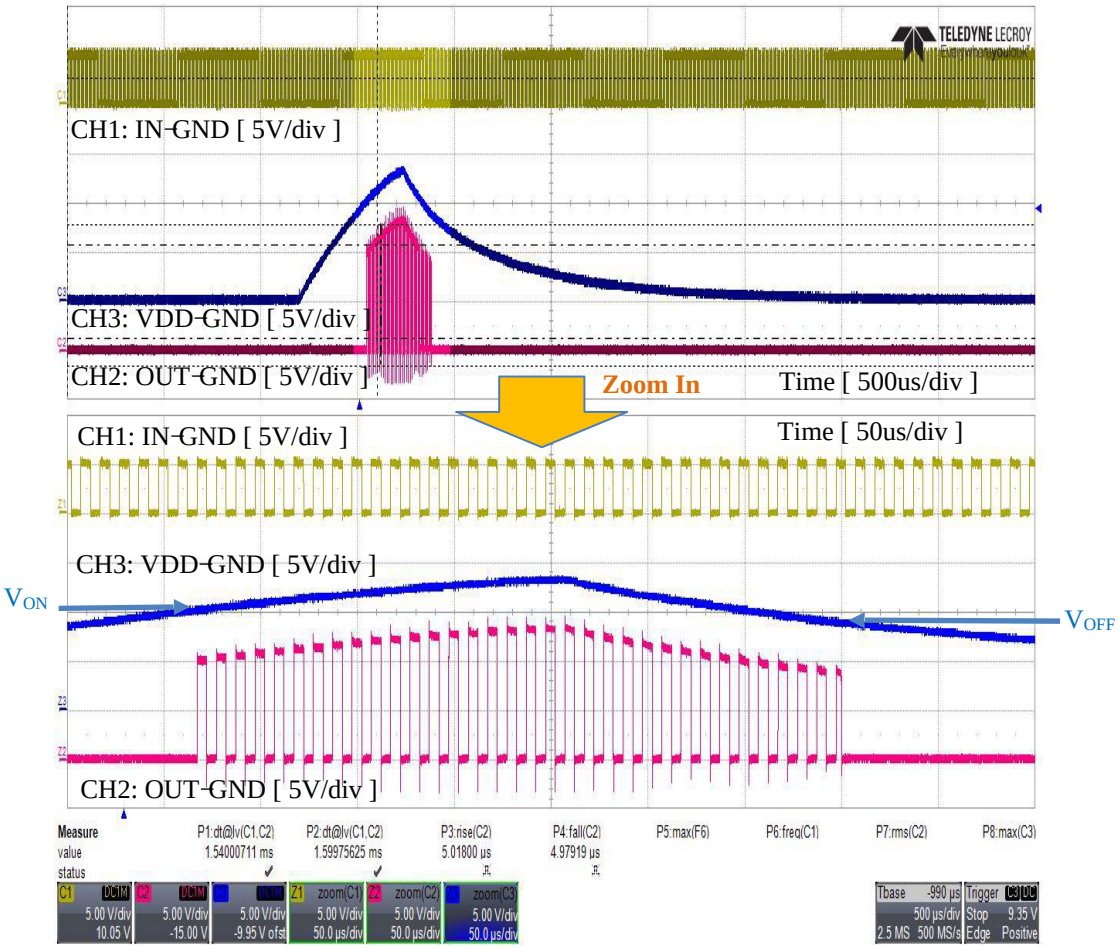

Figure 9. Waveforms while VDD is Varied from 0 V to 12 V

PCB Assembly

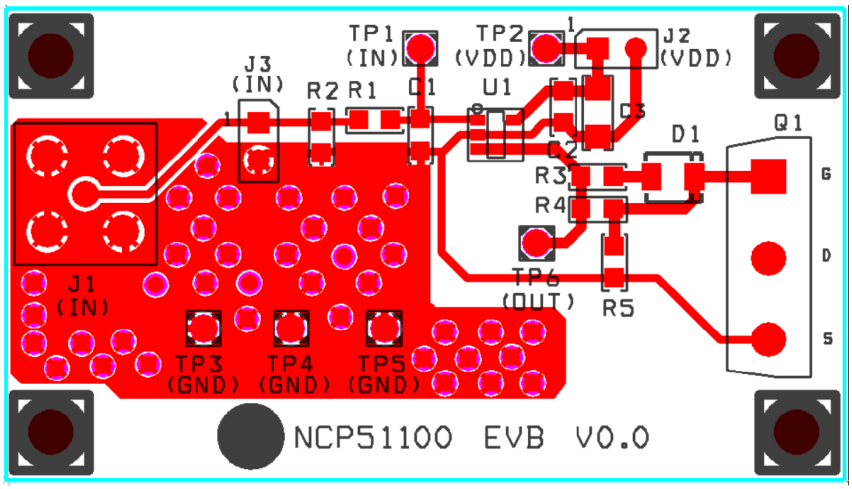

Figure 10. Printed Circuit Board (Top Layer)

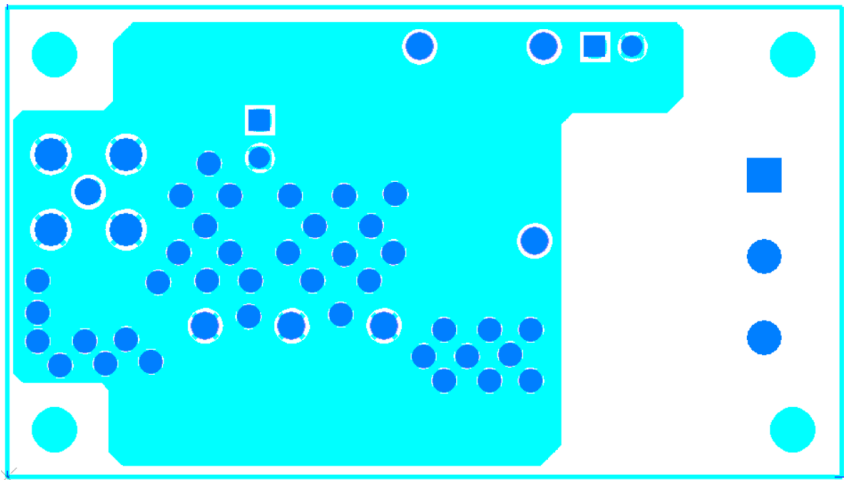

Figure 11. Printed Circuit Board (Bottom Layer)

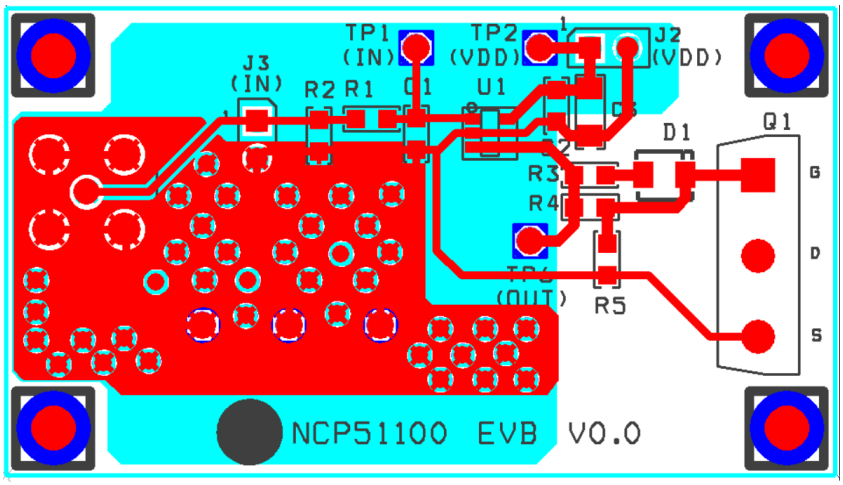

Figure 12. Printed Circuit Board (Top & Bottom Layer)

Table 3. BILL OF MATERIALS

#	Ref.	Part No.	Spec	Q'ty	Manufacturer	Pkg Type
1	C1	X (open)	N/A	1	N/A	
2	C2	CL21B104KBFNNNE	100 nF, 50 V, X7R	1	SAMSUNG ELEC.	0805 (2012)
3	C3	CL31B106KBHNNNE	10 uF, 50 V, X7R	1	SAMSUNG ELEC.	1206 (3216)
4	D1	SS25FA	50 V 2 A (Schottky Barrier)	1	ON SEMI	SOD−123FL
5	J1	731000207	SMB, RF Connector	1	MOLEX	Rhru−Hole
6	J2,J3	A2−2PA−2.54DSA	2 Pin Header	2	Hirose	Rhru−Hole
7	R1	TRR10EZPJ000	0 Ω, 5%, 1/4W	4	ROHM	0805 (2012)
8	R2	ESR10EZPJ510	51 Ω, 5%, 1/4W	1	ROHM	0805 (2012)
9	R3	ESR10EZPJ4R7	4.7 Ω, 5%, 1/4W	1	ROHM	0805 (2012)
10	R4	ESR10EZPJ101	100 Ω, 5%, 1/4W	1	ROHM	0805 (2012)
11	R5	ESR10EZPJ106	100K, 5%, 1/4W	1	ROHM	0805 (2012)
12	*TP1, TP2, TP3, TP4, TP5, TP6	8654	Test Point, 1mm hole	6	Youngjnsa	Rhru−Hole
13	U1	NCP51100	1K ohm, 5%, 1/4W	1	ON SEMI	SOT23−5
14	U2	X (open)	N/A	1	N/A	

MillerDrive is a trademark of Semiconductor Components Industries, LLC (SCILLC) or its subsidiaries in the United States and/or other countries.

onsemi, onsemi, and other names, marks, and brands are registered and/or common law trademarks of Semiconductor Components Industries, LLC dba "**onsemi**" or its affiliates and/or subsidiaries in the United States and/or other countries. **onsemi** owns the rights to a number of patents, trademarks, copyrights, trade secrets, and other intellectual property. A listing of **onsemi**'s product/patent coverage may be accessed at www.onsemi.com/site/pdf/Patent−Marking.pdf. **onsemi** is an Equal Opportunity/Affirmative Action Employer. This literature is subject to all applicable copyright laws and is not for resale in any manner.

The evaluation board/kit (research and development board/kit) (hereinafter the "board") is not a finished product and is not available for sale to consumers. The board is only intended for research, development, demonstration and evaluation purposes and will only be used in laboratory/development areas by persons with an engineering/technical training and familiar with the risks associated with handling electrical/mechanical components, systems and subsystems. This person assumes full responsibility/liability for proper and safe handling. Any other use, resale or redistribution for any other purpose is strictly prohibited.

THE BOARD IS PROVIDED BY ONSEMI TO YOU "AS IS" AND WITHOUT ANY REPRESENTATIONS OR WARRANTIES WHATSOEVER. WITHOUT LIMITING THE FOREGOING, ONSEMI (AND ITS LICENSORS/SUPPLIERS) HEREBY DISCLAIMS ANY AND ALL REPRESENTATIONS AND WARRANTIES IN RELATION TO THE BOARD, ANY MODIFICATIONS, OR THIS AGREEMENT, WHETHER EXPRESS, IMPLIED, STATUTORY OR OTHERWISE, INCLUDING WITHOUT LIMITATION ANY AND ALL REPRESENTATIONS AND WARRANTIES OF MERCHANTABILITY, FITNESS FOR A PARTICULAR PURPOSE, TITLE, NON−INFRINGEMENT, AND THOSE ARISING FROM A COURSE OF DEALING, TRADE USAGE, TRADE CUSTOM OR TRADE PRACTICE.

onsemi reserves the right to make changes without further notice to any board.

You are responsible for determining whether the board will be suitable for your intended use or application or will achieve your intended results. Prior to using or distributing any systems that have been evaluated, designed or tested using the board, you agree to test and validate your design to confirm the functionality for your application. Any technical, applications or design information or advice, quality characterization, reliability data or other services provided by **onsemi** shall not constitute any representation or warranty by **onsemi**, and no additional obligations or liabilities shall arise from **onsemi** having provided such information or services.

onsemi products including the boards are not designed, intended, or authorized for use in life support systems, or any FDA Class 3 medical devices or medical devices with a similar or equivalent classification in a foreign jurisdiction, or any devices intended for implantation in the human body. You agree to indemnify, defend and hold harmless **onsemi**, its directors, officers, employees, representatives, agents, subsidiaries, affiliates, distributors, and assigns, against any and all liabilities, losses, costs, damages, judgments, and expenses, arising out of any claim, demand, investigation, lawsuit, regulatory action or cause of action arising out of or associated with any unauthorized use, even if such claim alleges that **onsemi** was negligent regarding the design or manufacture of any products and/or the board.

This evaluation board/kit does not fall within the scope of the European Union directives regarding electromagnetic compatibility, restricted substances (RoHS), recycling (WEEE), FCC, CE or UL, and may not meet the technical requirements of these or other related directives.

FCC WARNING − This evaluation board/kit is intended for use for engineering development, demonstration, or evaluation purposes only and is not considered by **onsemi** to be a finished end product fit for general consumer use. It may generate, use, or radiate radio frequency energy and has not been tested for compliance with the limits of computing devices pursuant to part 15 of FCC rules, which are designed to provide reasonable protection against radio frequency interference. Operation of this equipment may cause interference with radio communications, in which case the user shall be responsible, at its expense, to take whatever measures may be required to correct this interference.

onsemi does not convey any license under its patent rights nor the rights of others.

LIMITATIONS OF LIABILITY: **onsemi** shall not be liable for any special, consequential, incidental, indirect or punitive damages, including, but not limited to the costs of requalification, delay, loss of profits or goodwill, arising out of or in connection with the board, even if **onsemi** is advised of the possibility of such damages. In no event shall **onsemi**'s aggregate liability from any obligation arising out of or in connection with the board, under any theory of liability, exceed the purchase price paid for the board, if any.

The board is provided to you subject to the license and other terms per **onsemi**'s standard terms and conditions of sale. For more information and documentation, please visit www.onsemi.com.

ADDITIONAL INFORMATION

TECHNICAL PUBLICATIONS:
Technical Library: www.onsemi.com/design/resources/technical−documentation
onsemi Website: www.onsemi.com

ONLINE SUPPORT: www.onsemi.com/support
For additional information, please contact your local Sales Representative at www.onsemi.com/support/sales