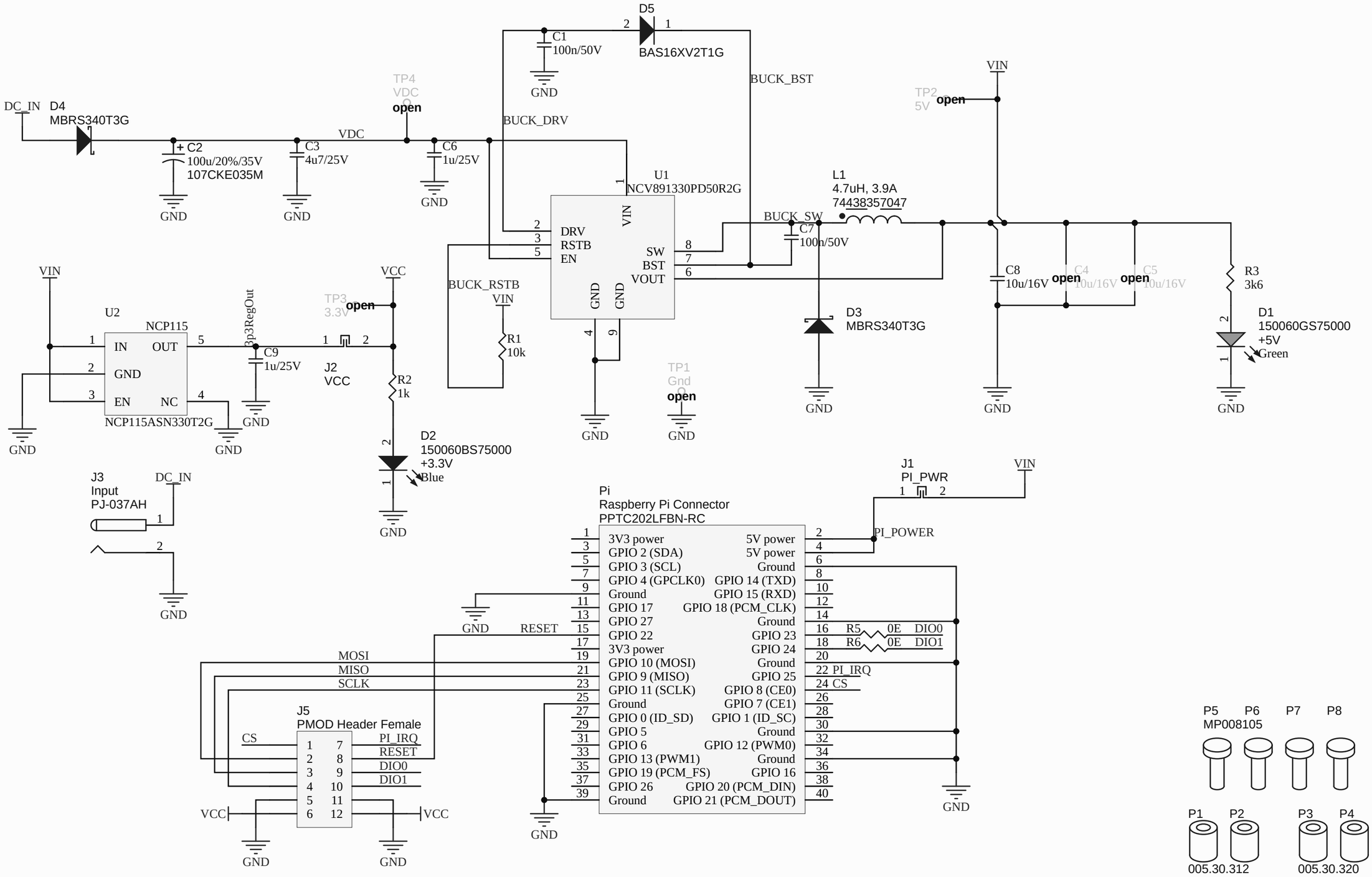

Title *NCN26010BMNEVB*			*ON Semiconductor* *5005 E McDowell Road* *Phoenix, AZ 85008-4229* *USA*
Size: A4	Number:'	Revision:1.0	
Sheet1 of 1			