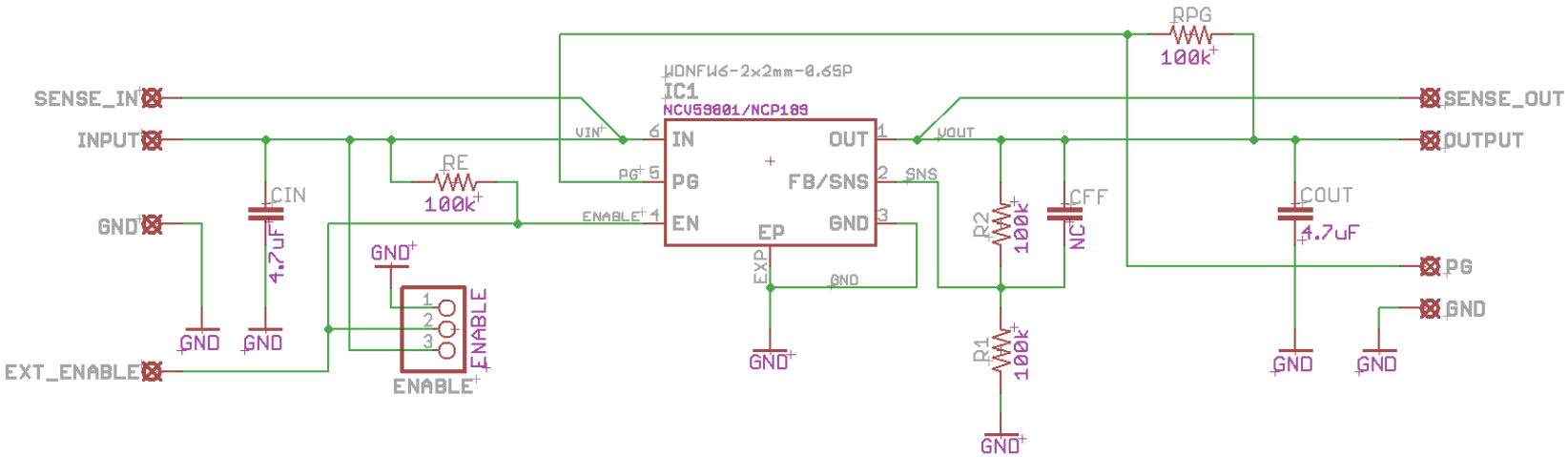Schematic for the NCP59801MTADJTAG LDO Demo Board