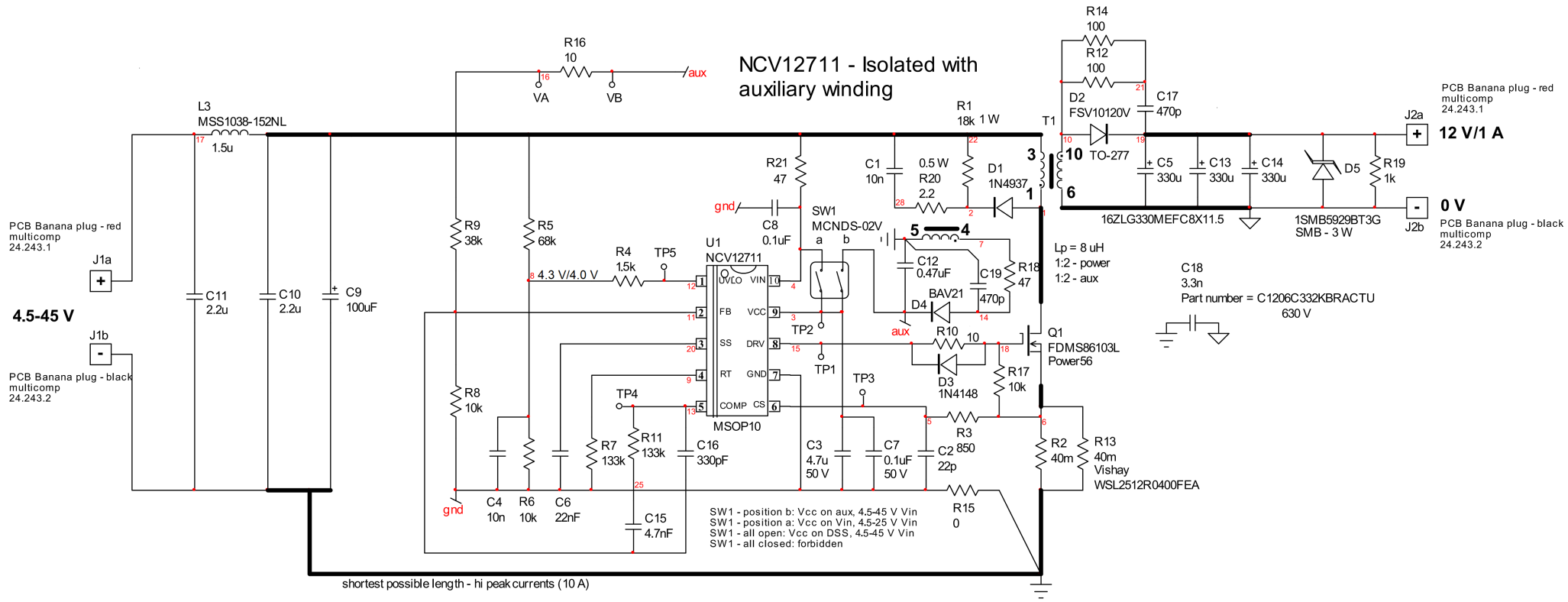
NCV12711 - Isolated with auxiliary winding
R16
10
VA
VB
aux
L3
MSS1038-152NL
1.5u
PCB Banana plug - red
multicomp
24.243.1
J1a
4.5-45 V
J1b
PCB Banana plug - black
multicomp
24.243.2
C11
2.2u
C10
2.2u
C9
100uF
R9
38k
R5
68k
R8
10k
4.3 V/4.0 V
R4
1.5k
TP5
U1
NCV12711
UVLO
VIN
FB
VCC
SS
DRV
RT
GND
COMP
CS
MSOP10
TP4
R7
133k
R11
133k
C16
330pF
C4
10n
R6
10k
C6
22nF
C15
4.7nF
gnd
shortest possible length - hi peak currents (10 A)
R21
47
C8
0.1uF
SW1
MCNDS-02V
a
b
TP2
TP1
TP3
C3
4.7u
50 V
C7
0.1uF
50 V
C1
10n
0.5 W
R20
2.2
R1
18k 1 W
D1
1N4937
C12
0.47uF
C19
470p
R18
47
D4
BAV21
R10
10
D3
1N4148
R17
10k
R3
850
C2
22p
R15
0
R2
40m
R13
40m
Vishay
WSL2512R0400FEA
Q1
FDMS86103L
Power56
SW1 - position b: Vcc on aux, 4.5-45 V Vin
SW1 - position a: Vcc on Vin, 4.5-25 V Vin
SW1 - all open: Vcc on DSS, 4.5-45 V Vin
SW1 - all closed: forbidden
T1
Lp = 8 uH
1:2 - power
1:2 - aux
R14
100
R12
100
D2
FSV10120V
TO-277
C17
470p
C5
330u
C13
330u
C14
330u
16ZLG330MEFC8X11.5
D5
1SMB5929BT3G
SMB - 3 W
R19
1k
C18
3.3n
Part number = C1206C332KBRACTU
630 V
J2a
12 V/1 A
J2b
0 V
PCB Banana plug - red
multicomp
24.243.1
PCB Banana plug - black
multicomp
24.243.2