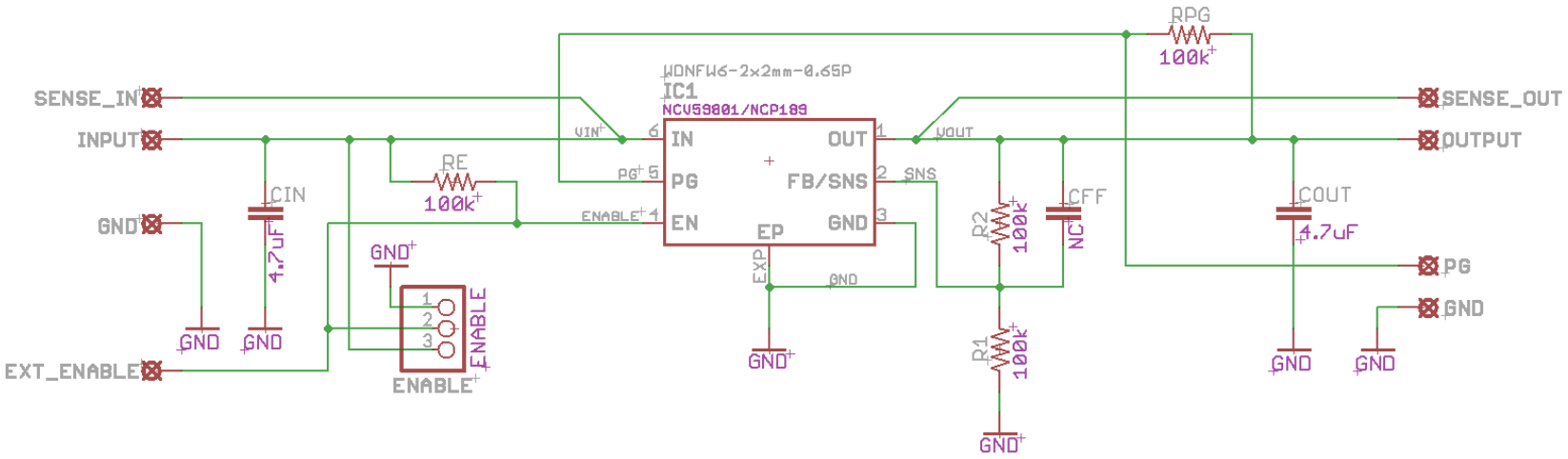Schematic for the NCV8189CMTWADJTAGEVB LDO Demo Board