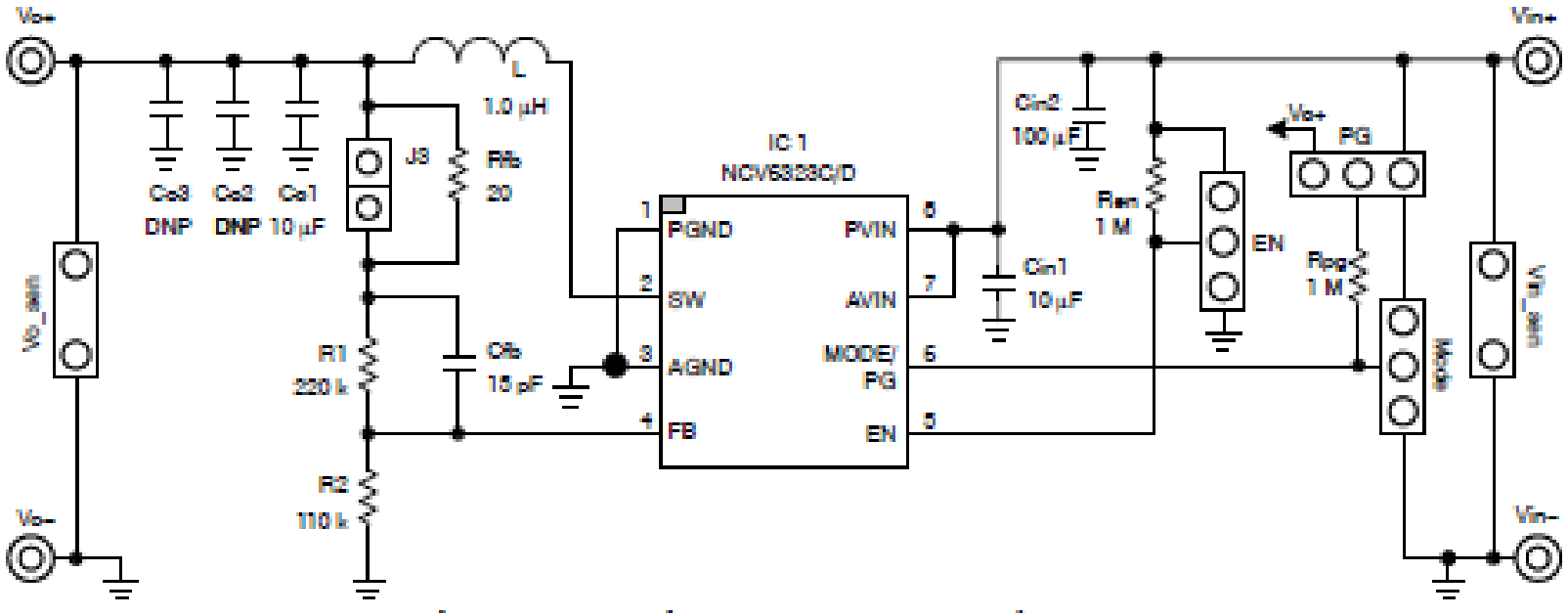Schematic for the NCV6323DGEVB Evaluation Board