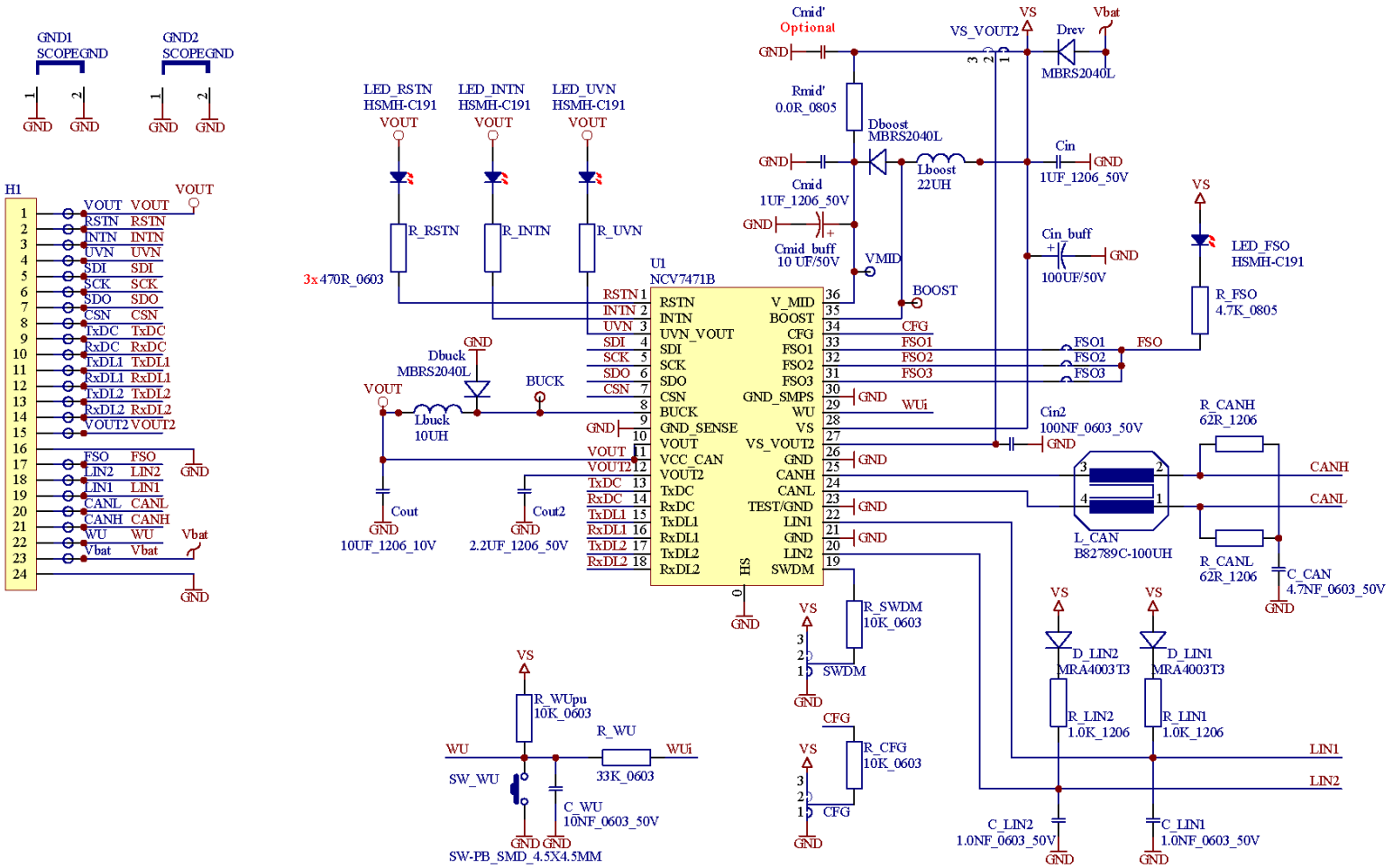Schematic for the NCV7471B5V1GEVB Evaluation Board