ON Semiconductor
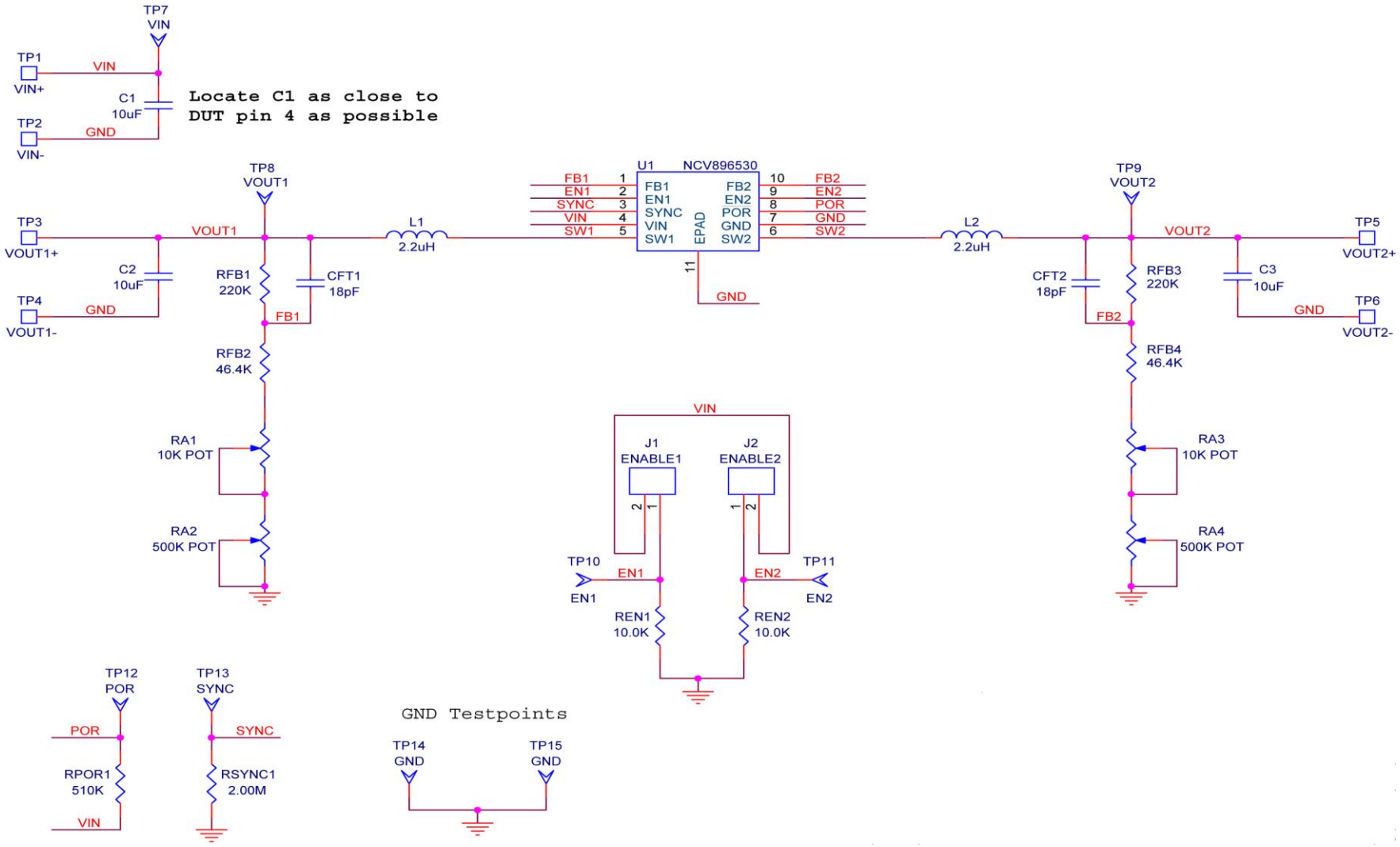
Schematic for the NCV896530GEVB Evaluation Board