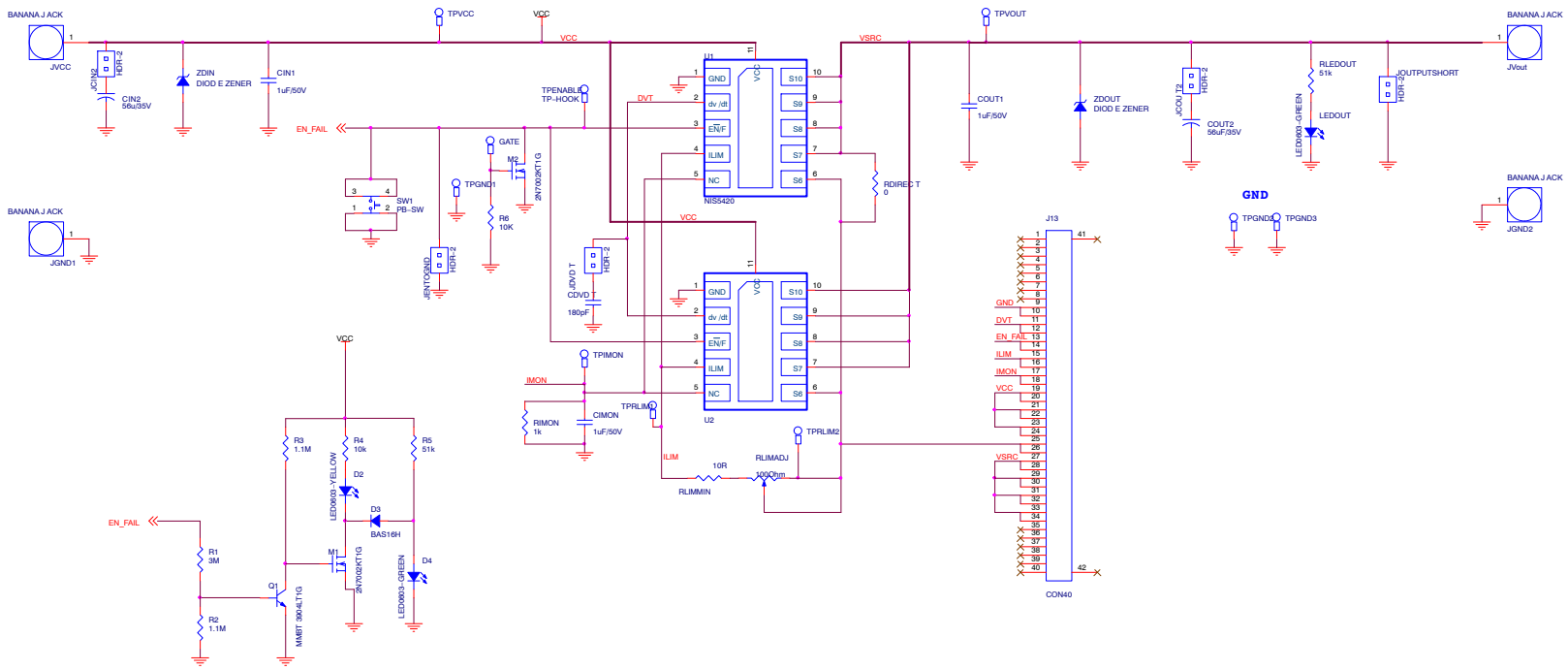NIS5420 Evaluation Board Schematic