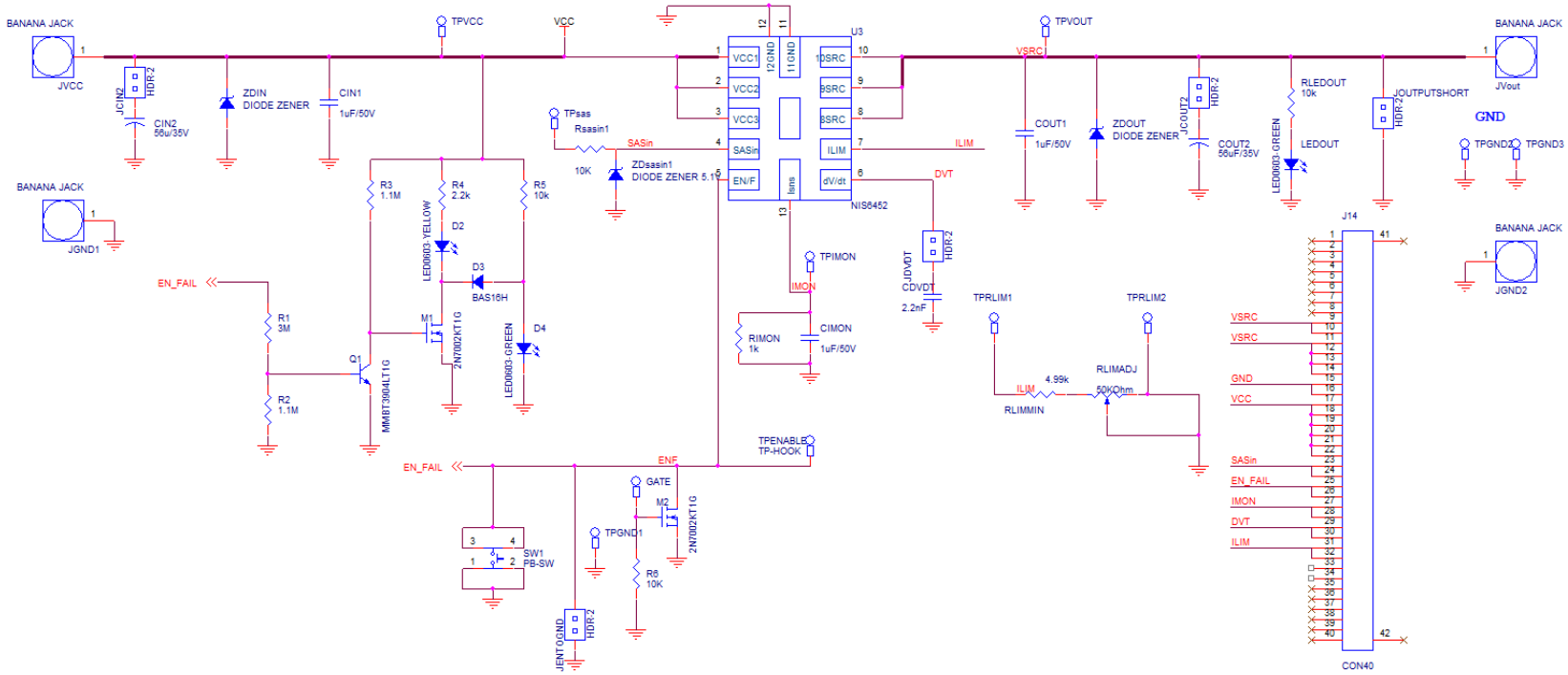NIS6432/52 Evaluation Board Schematic