XLLGA3, 0.62x0.62, 0.35P
CASE 713AA
ISSUE D

SCALE 8:1

DATE 12 MAR 2021

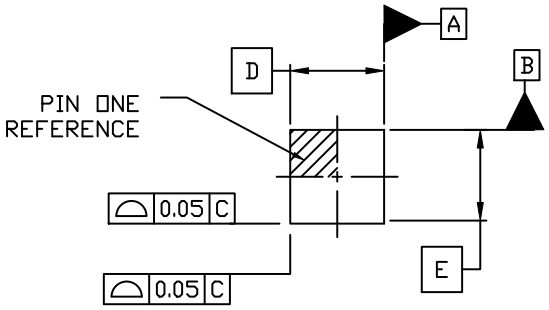

TOP VIEW

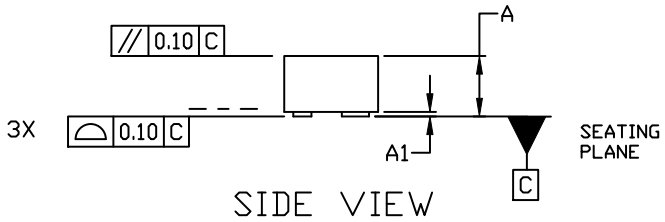

SIDE VIEW

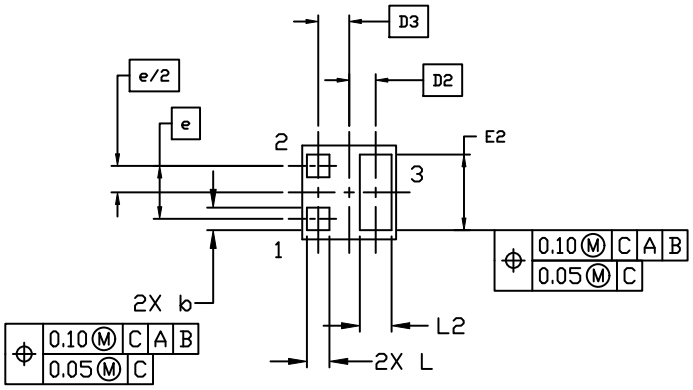

BOTTOM VIEW

NOTES:

1. DIMENSIONING AND TOLERANCING PER ASME Y14.5M, 1994.
2. CONTROLLING DIMENSION: MILLIMETERS

DIM	MILLIMETERS		
	MIN.	NOM.	MAX.
A	0.34	0.39	0.43
A1	0.000	---	0.03
b	0.10	0.15	0.20
D	0.57	0.62	0.67
D2	0.175 BSC		
D3	0.205 BSC		
E	0.57	0.62	0.67
E2	0.40	0.50	0.60
e	0.350 BSC		
k	0.200 REF		
L	0.09	0.15	0.21
L2	0.11	0.21	0.31

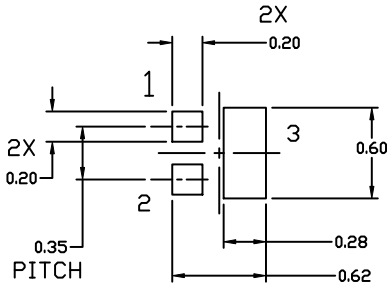

RECOMMENDED
MOUNTING FOOTPRINT

* For additional information on our Pb-Free strategy and soldering details, please download the ON Semiconductor Soldering and Mounting Techniques Reference Manual, SOLDERRM/D.

GENERIC
MARKING DIAGRAM*

X = Specific Device Code
M = Date Code

*This information is generic. Please refer to device data sheet for actual part marking. Pb−Free indicator, "G" or microdot "▪", may or may not be present. Some products may not follow the Generic Marking.

DOCUMENT NUMBER:	98AON67527E	Electronic versions are uncontrolled except when accessed directly from the Document Repository. Printed versions are uncontrolled except when stamped "CONTROLLED COPY" in red.
DESCRIPTION:	XLLGA3, 0.62x0.62, 0.35P	PAGE 1 OF 1

onsemi and onsemi are trademarks of Semiconductor Components Industries, LLC dba **onsemi** or its subsidiaries in the United States and/or other countries. **onsemi** reserves the right to make changes without further notice to any products herein. **onsemi** makes no warranty, representation or guarantee regarding the suitability of its products for any particular purpose, nor does **onsemi** assume any liability arising out of the application or use of any product or circuit, and specifically disclaims any and all liability, including without limitation special, consequential or incidental damages. **onsemi** does not convey any license under its patent rights nor the rights of others.