FGD3245G2-F085C

EcoSPARK® 2 Ignition IGBT

320 mJ, 450 V, N−Channel Ignition IGBT

ON Semiconductor®

www.onsemi.com

Features

- SCIS Energy = 320 mJ at T_J = 25°C
- Logic Level Gate Drive
- Low Saturation Voltage
- AEC−Q101 Qualified and PPAP Capable
- These Devices are Pb−Free and are RoHS Compliant

Applications

- Automotive Ignition Coil Driver Circuits
- High Current Ignition System
- Coil on Plug Application

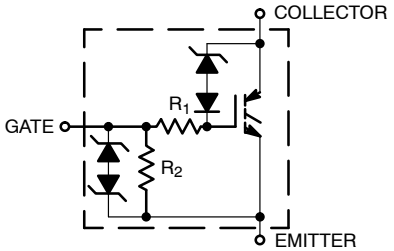

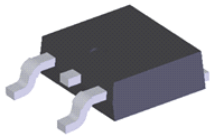

DPAK3
CASE 369AS

MAXIMUM RATINGS (T_J = 25°C unless otherwise noted)

Symbol	Parameter	Value	Unit
BV_{CER}	Collector to Emitter Breakdown Voltage (IC = 1 mA)	450	V
BV_{ECS}	Emitter to Collector Voltage − Reverse Battery Condition (IC = 10 mA)	28	V
E_{SCIS25}	ISCIS = 14.6 A, L = 3.0 mHy, RGE = 1 KΩ, T_C = 25°C (Note 1)	320	mJ
$E_{SCIS150}$	ISCIS = 10.9 A, L = 3.0 mHy, RGE = 1 KΩ, T_C = 150°C (Note 2)	180	mJ
IC25	Collector Current Continuous at VGE = 4.0 V, T_C = 25°C	23	A
IC110	Collector Current Continuous at VGE = 4.0 V, T_C = 110°C	23	A
V_{GEM}	Gate to Emitter Voltage Continuous	±10	V
PD	Power Dissipation Total, T_C = 25°C	150	W
	Power Dissipation Derating, T_C > 25°C	1.1	W/°C
T_J, T_{STG}	Operating Junction and Storage Temperature	−55 to +175	°C
T_L	Lead Temperature for Soldering Purposes (1/8" from case for 10 s)	300	°C
T_{PKG}	Reflow Soldering according to JESD020C	260	°C
ESD	HBM−Electrostatic Discharge Voltage at 100 pF, 1500 Ω	4	kV
	CDM−Electrostatic Discharge Voltage at 1 Ω	2	kV

Stresses exceeding those listed in the Maximum Ratings table may damage the device. If any of these limits are exceeded, device functionality should not be assumed, damage may occur and reliability may be affected.

1. Self clamped inductive Switching Energy (ESCIS25) of 320 mJ is based on the test conditions that is starting T_J = 25°C, L = 3 mHy, ISCIS = 14.6 A, VCC = 100 V during inductor charging and VCC = 0 V during time in clamp.
2. Self Clamped inductive Switching Energy (ESCIS150) of 180 mJ is based on the test conditions that is starting T_J = 150°C, L = 3mHy, ISCIS = 10.9 A, VCC = 100 V during inductor charging and VCC = 0 V during time in clamp.

MARKING DIAGRAM

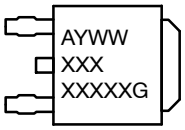

A	= Assembly Location
Y	= Year
WW	= Work Week
XXXX	= Device Code
G	= Pb−Free Package

ORDERING INFORMATION

See detailed ordering and shipping information on page 2 of this data sheet.

© Semiconductor Components Industries, LLC, 2016

THERMAL RESISTANCE RATINGS

Characteristic	Symbol	Max	Units
Junction−to−Case − Steady State (Drain)	$R_{\theta JC}$	0.9	°C/W

ELECTRICAL CHARACTERISTICS (T_J = 25°C unless otherwise specified)

Symbol	Parameter	Test Conditions		Min	Typ.	Max.	Units
OFF CHARACTERISTICS							
BV_{CER}	Collector to Emitter Breakdown Voltage	I_{CE} = 2 mA, V_{GE} = 0 V, R_{GE} = 1 kΩ, T_J = −40 to 150°C		420	–	480	V
BV_{CES}	Collector to Emitter Breakdown Voltage	I_{CE} = 10 mA, V_{GE} = 0 V, R_{GE} = 0, T_J = −40 to 150°C		440	–	500	V
BV_{ECS}	Emitter to Collector Breakdown Voltage	I_{CE} = −75 mA, V_{GE} = 0 V, T_J = 25°C		28	–	–	V
BV_{GES}	Gate to Emitter Breakdown Voltage	I_{GES} = ±2 mA		±12	±14	–	V
I_{CER}	Collector to Emitter Leakage Current	V_{CE} = 175 V, R_{GE} = 1 kΩ	T_J = 25°C	–	–	25	μA
			T_J = 150°C	–	–	1	mA
I_{ECS}	Emitter to Collector Leakage Current	V_{EC} = 24 V	T_J = 25°C	–	–	1	mA
			T_J = 150°C	–	–	40	
R_1	Series Gate Resistance			–	120	–	Ω
R_2	Gate to Emitter Resistance			10K	–	30K	Ω
ON CHARACTERISTICS							
$V_{CE(SAT)}$	Collector to Emitter Saturation Voltage	I_{CE} = 6 A, V_{GE} = 4 V, T_J = 25°C		–	1.13	1.25	V
$V_{CE(SAT)}$	Collector to Emitter Saturation Voltage	I_{CE} = 10 A, V_{GE} = 4.5 V, T_J = 150°C		–	1.32	1.50	V
$V_{CE(SAT)}$	Collector to Emitter Saturation Voltage	I_{CE} = 15 A, V_{GE} = 5 V, T_J = 150°C		–	1.64	1.85	V
DYNAMIC CHARACTERISTICS							
$Q_{G(ON)}$	Gate Charge	I_{CE} = 10 A, V_{CE} = 12 V, V_{GE} = 5 V		–	23	–	nC
$V_{GE(TH)}$	Gate to Emitter Threshold Voltage	I_{CE} = 1 mA, V_{CE} = V_{GE}	T_J = 25°C	1.3	1.6	2.2	V
			T_J = 150°C	0.75	1.1	1.8	
V_{GEP}	Gate to Emitter Plateau Voltage	V_{CE} = 12 V, I_{CE} = 10 A		–	2.7	–	V
SWITCHING CHARACTERISTICS							
$td_{(ON)R}$	Current Turn−On Delay Time−Resistive	V_{CE} = 14 V, R_L = 1 Ω, V_{GE} = 5 V, R_G = 470 Ω, T_J = 25°C		–	0.9	4	μs
t_{rR}	Current Rise Time−Resistive			–	2.6	7	
$td_{(OFF)L}$	Current Turn−Off Delay Time−Inductive	V_{CE} = 300 V, L = 1 mH, V_{GE} = 5 V, R_G = 470 Ω, I_{CE} = 6.5 A, T_J = 25°C		–	5.4	15	
t_{fL}	Current Fall Time−Inductive			–	2.7	15	

Product parametric performance is indicated in the Electrical Characteristics for the listed test conditions, unless otherwise noted. Product performance may not be indicated by the Electrical Characteristics if operated under different conditions.

PACKAGE MARKING AND ORDERING INFORMATION

Device	Package	Shipping†
FGD3245G2−F085C	DPAK (Pb−Free)	2500 Units/Tape & Reel

†For information on tape and reel specifications, including part orientation and tape sizes, please refer to our Tape and Reel Packaging Specifications Brochure, BRD8011/D.

TYPICAL CHARACTERISTICS

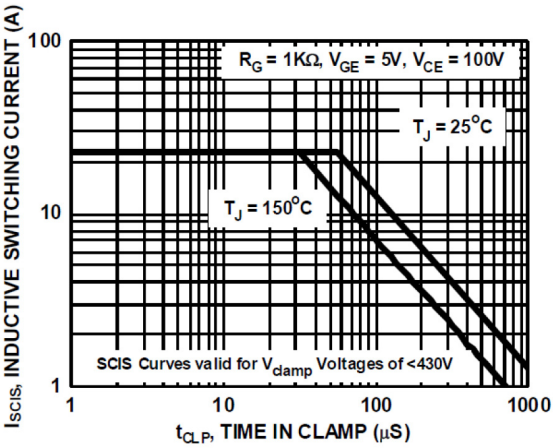

Figure 1. Self Clamped Inductive Switching Current vs. Time in Clamp

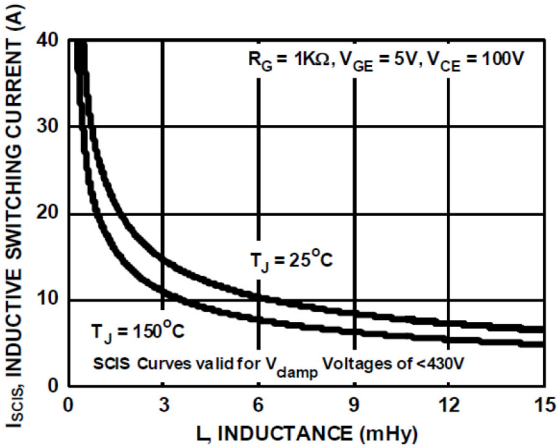

Figure 2. Self Clamped Inductive Switching Current vs. Inductance

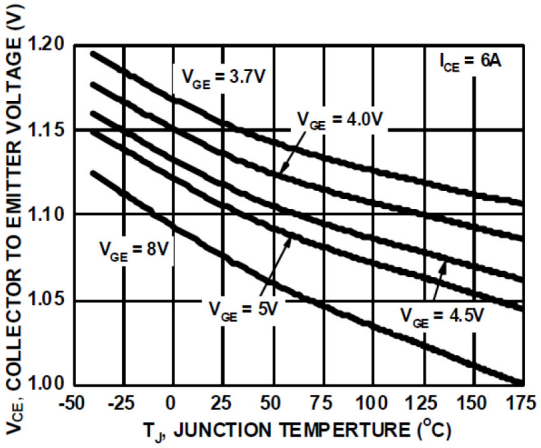

Figure 3. Collector to Emitter On−State Voltage vs. Junction Temperature

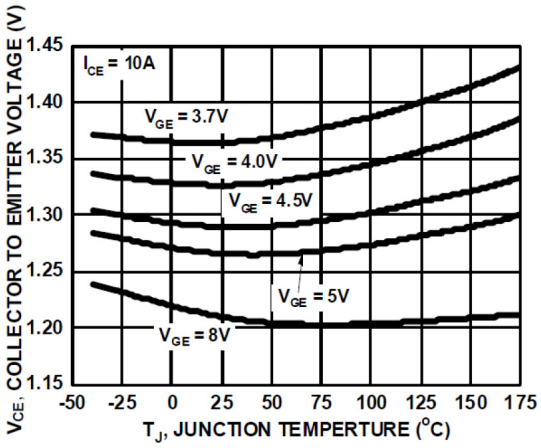

Figure 4. Collector to Emitter On−State Voltage vs. Junction Temperature

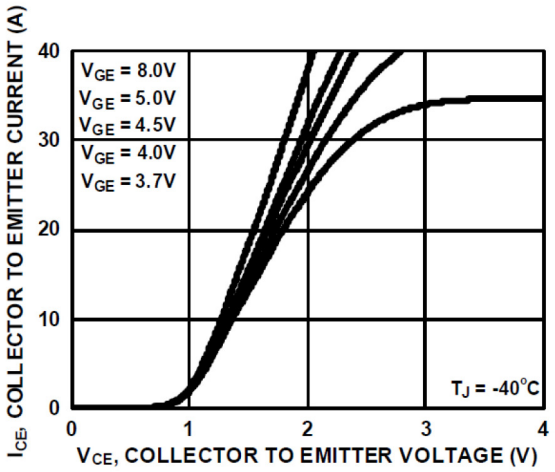

Figure 5. Collector to Emitter On−State Voltage vs. Collector Current

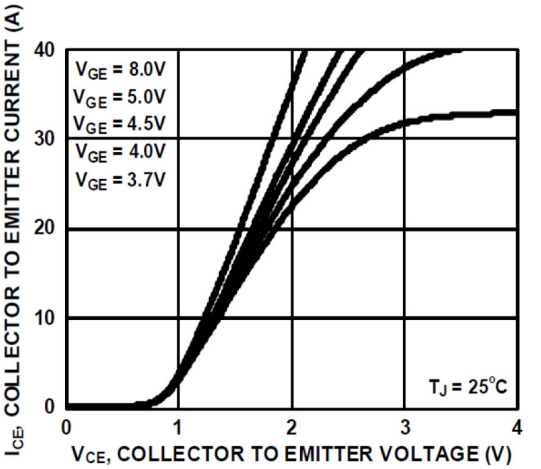

Figure 6. Collector to Emitter On−State Voltage vs. Collector Current

TYPICAL CHARACTERISTICS (continued)

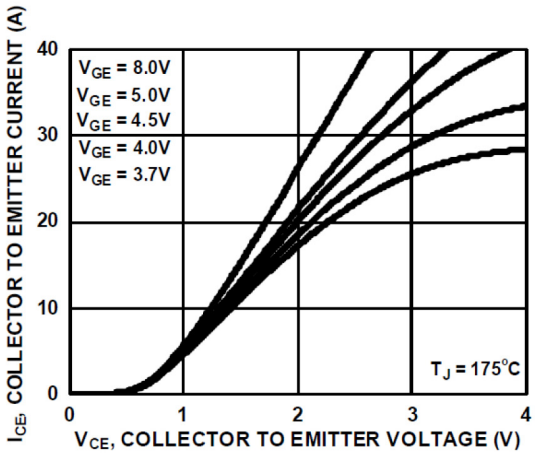

Figure 7. Collector to Emitter On−State Voltage vs. Collector Current

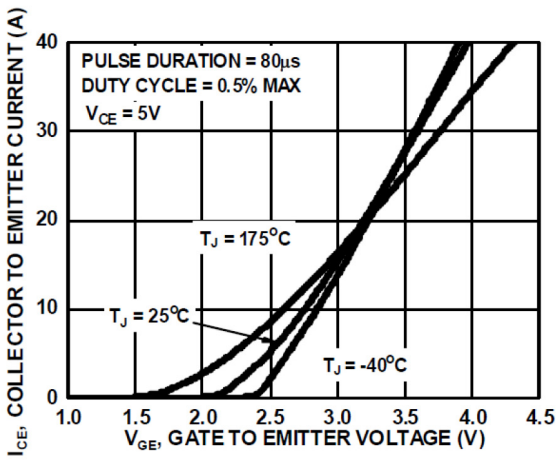

Figure 8. Transfer Characteristics

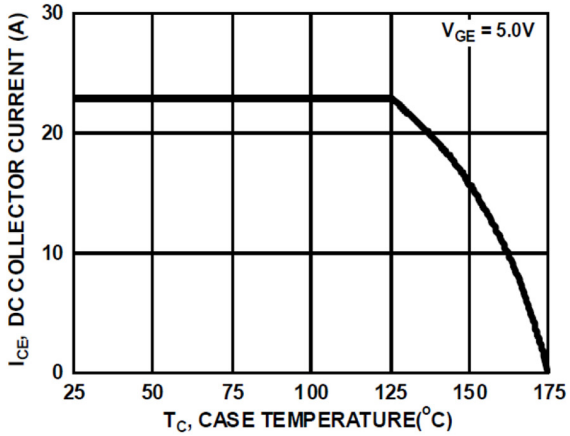

Figure 9. DC Collector Current vs. Case Temperature

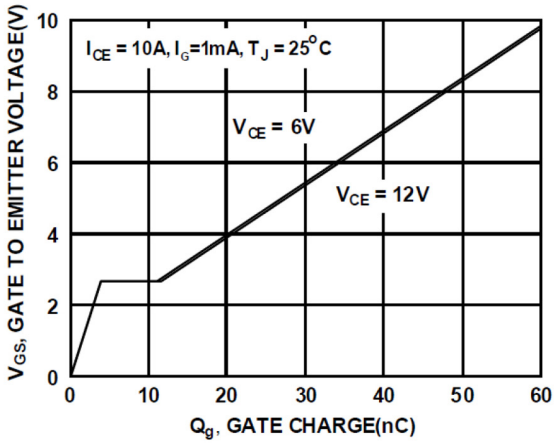

Figure 10. Gate Charge

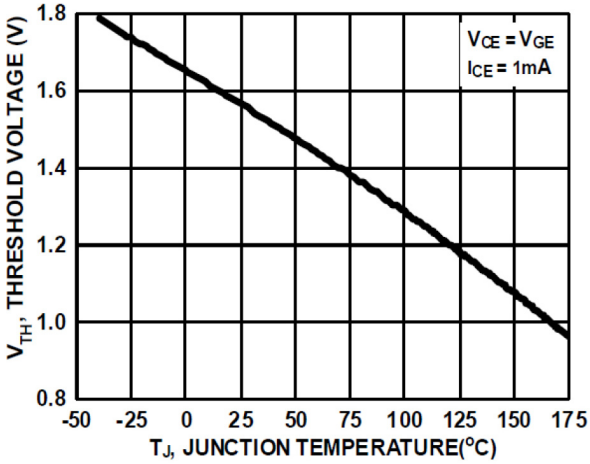

Figure 11. Threshold Voltage vs. Junction Temperature

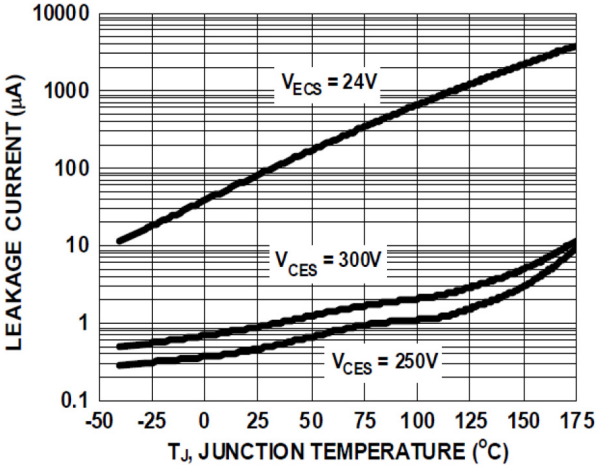

Figure 12. Leakage Current vs. Junction Temperature

TYPICAL CHARACTERISTICS (continued)

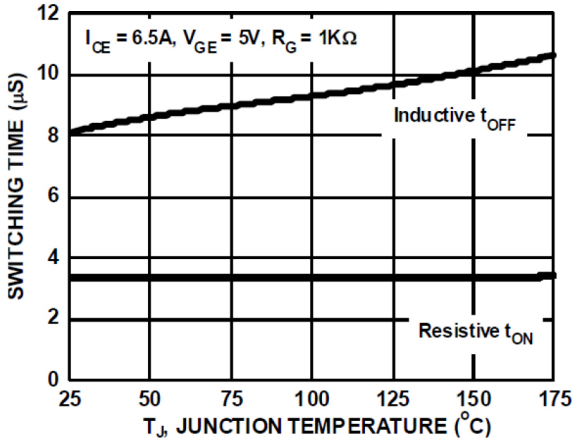

Figure 13. Switching Time vs. Junction Temperature

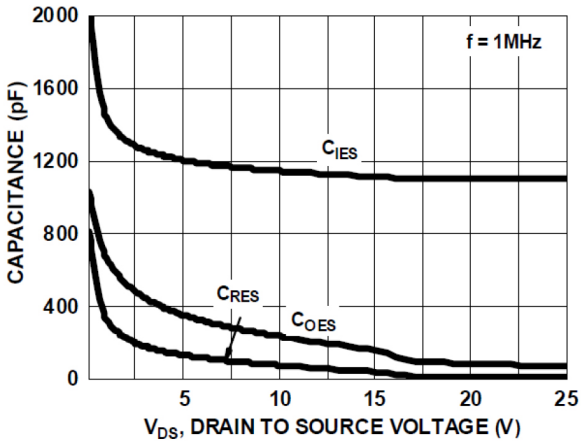

Figure 14. Capacitance vs. Collector to Emitter

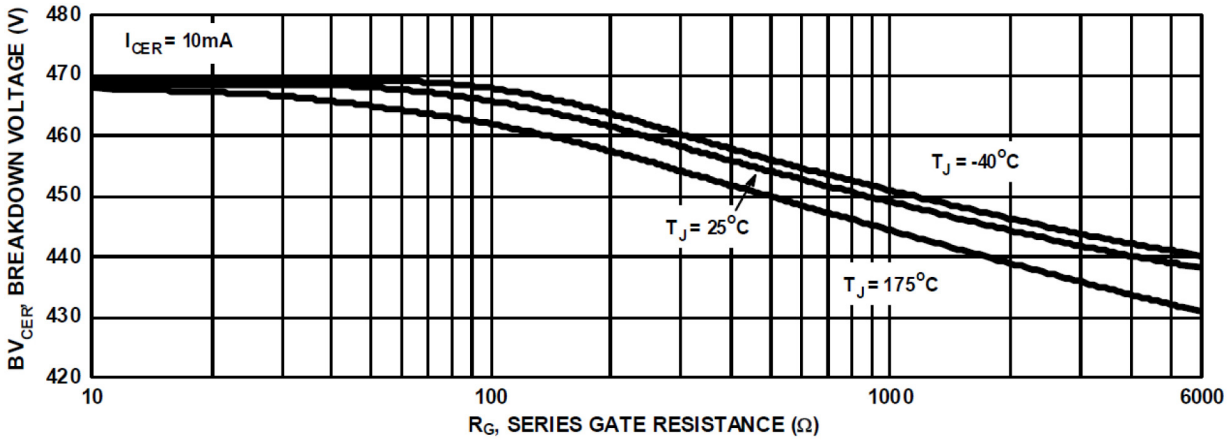

Figure 15. Break Down Voltage vs. Series Resistance

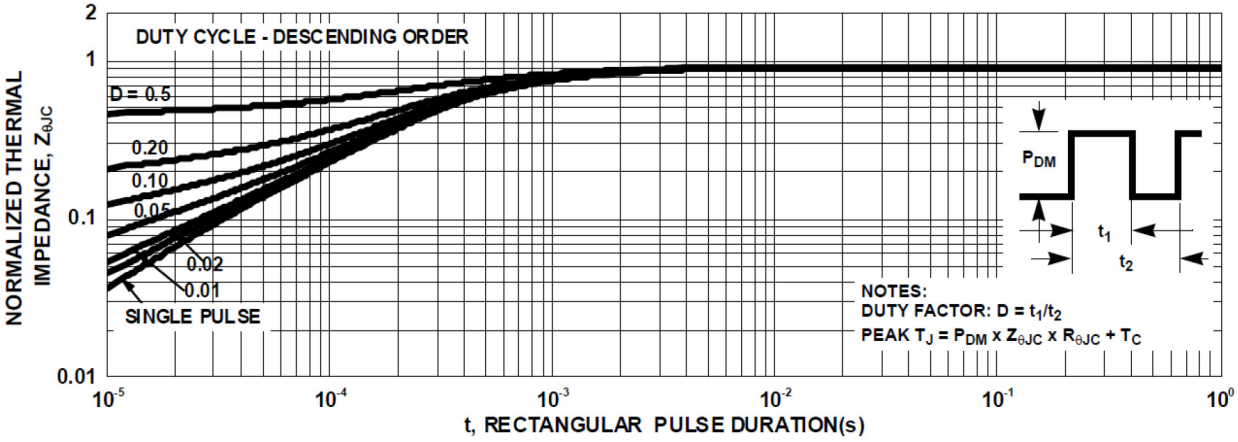

Figure 16. IGBT Normalized Transient Thermal Impedance, Junction to Case

TEST CIRCUIT AND WAVEFORMS

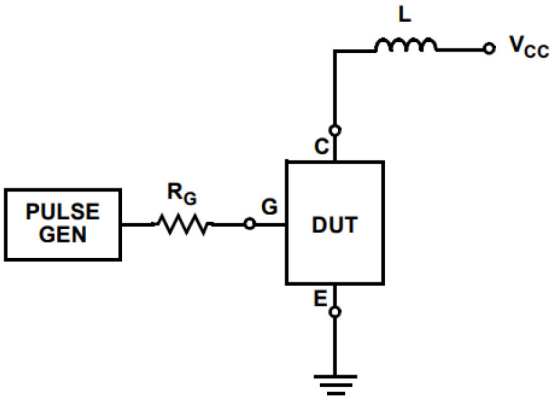

Figure 17. Inductive Switching Test Circuit

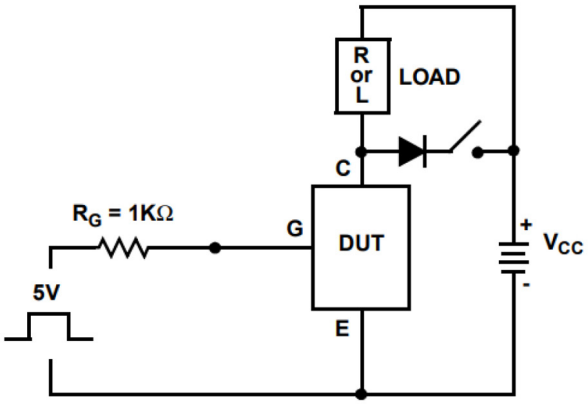

Figure 18. t_{ON} and t_{OFF} Switching Test Circuit

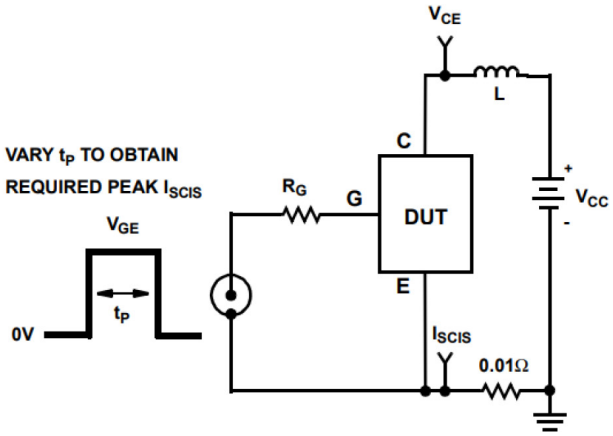

Figure 19. Energy Test Circuit

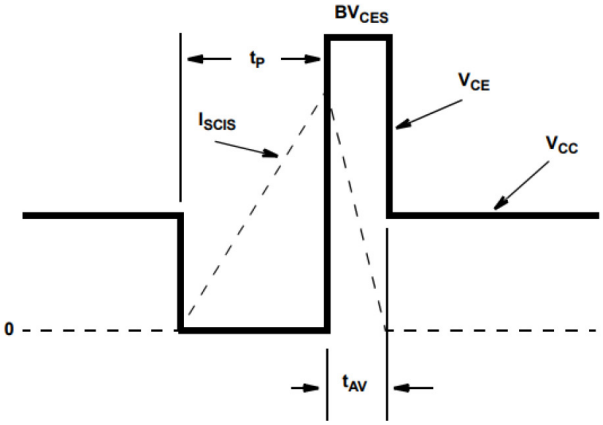

Figure 20. Energy Waveforms

ECOSPARK is registered trademark of Semiconductor Components Industries, LLC (SCILLC) or its subsidiaries in the United States and/or other countries.

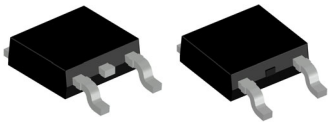

DPAK3 6.10x6.54x2.29, 4.57P
CASE 369AS
ISSUE B

DATE 20 DEC 2023

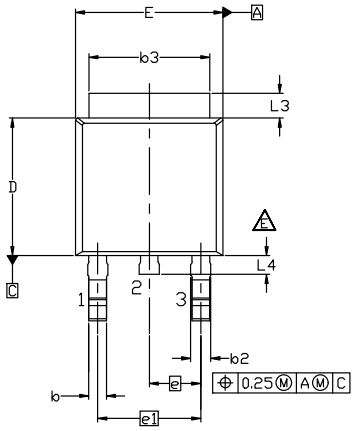

NON-DIODE PRODUCTS VERSION

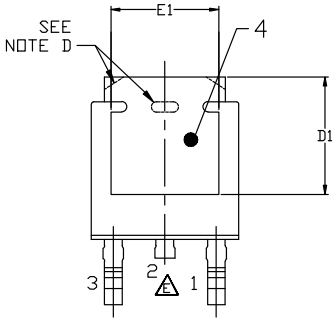

NON-DIODE PRODUCTS VERSION

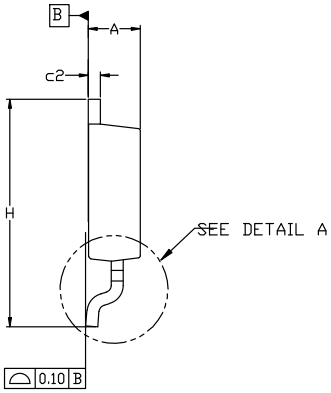

NOTES: UNLESS OTHERWISE SPECIFIED
A) THIS PACKAGE CONFORMS TO JEDEC, TO-252, ISSUE F, VARIATION AA.
B) ALL DIMENSIONS ARE IN MILLIMETERS.
C) DIMENSIONING AND TOLERANCING PER ASME Y14.5M-2018.
D) SUPPLIER DEPENDENT MOLD LOCKING HOLES OR CHAMFERED CORNERS OR EDGE PROTRUSION.
E) FOR DIODE PRODUCTS, L4 IS 0.25 MM MAX PLASTIC BODY STUB WITHOUT CENTER LEAD.
F) DIMENSIONS ARE EXCLUSIVE OF BURRS, MOLD FLASH AND TIE BAR EXTRUSIONS.
G) LAND PATTERN RECOMMENDATION IS BASED ON IPC7351A STD TO228P991X239-3N.

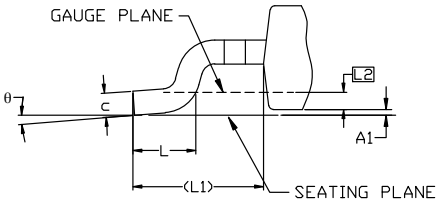

DETAIL A
(ROTATED -90°)
SCALE: 12X

DIM	MILLIMETERS		
	MIN.	NOM.	MAX.
A	2.18	2.29	2.39
A1	0.00	–	0.127
b	0.64	0.77	0.89
b2	0.76	0.95	1.14
b3	5.21	5.34	5.46
c	0.45	0.53	0.61
c2	0.45	0.52	0.58
D	5.97	6.10	6.22
D1	5.21	---	---
E	6.35	6.54	6.73
E1	4.32	---	---
e	2.286 BSC		
e1	4.572 BSC		
H	9.40	9.91	10.41
L	1.40	1.59	1.78
L1	2.90 REF		
L2	0.51 BSC		
L3	0.89	1.08	1.27
L4	---	---	1.02
θ	0°	---	10°

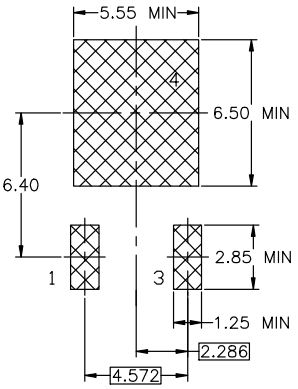

LAND PATTERN RECOMMENDATION

*FOR ADDITIONAL INFORMATION ON OUR PB-FREE STRATEGY AND SOLDERING DETAILS, PLEASE DOWNLOAD THE ON SEMICONDUCTOR SOLDERING AND MOUNTING TECHNIQUES REFERENCE MANUAL, SOLDERRM/D.

GENERIC MARKING DIAGRAM*

*This information is generic. Please refer to device data sheet for actual part marking. Pb-Free indicator, "G" or microdot "▪", may or may not be present. Some products may not follow the Generic Marking.

XXXX = Specific Device Code
A = Assembly Location
Y = Year
WW = Work Week
ZZ = Assembly Lot Code

DOCUMENT NUMBER:	98AON13810G	Electronic versions are uncontrolled except when accessed directly from the Document Repository. Printed versions are uncontrolled except when stamped "CONTROLLED COPY" in red.	
DESCRIPTION:	DPAK3 6.10x6.54x2.29, 4.57P		PAGE 1 OF 1

onsemi and onsemi are trademarks of Semiconductor Components Industries, LLC dba **onsemi** or its subsidiaries in the United States and/or other countries. **onsemi** reserves the right to make changes without further notice to any products herein. **onsemi** makes no warranty, representation or guarantee regarding the suitability of its products for any particular purpose, nor does **onsemi** assume any liability arising out of the application or use of any product or circuit, and specifically disclaims any and all liability, including without limitation special, consequential or incidental damages. **onsemi** does not convey any license under its patent rights nor the rights of others.

onsemi, onsemi, and other names, marks, and brands are registered and/or common law trademarks of Semiconductor Components Industries, LLC dba "**onsemi**" or its affiliates and/or subsidiaries in the United States and/or other countries. **onsemi** owns the rights to a number of patents, trademarks, copyrights, trade secrets, and other intellectual property. A listing of **onsemi**'s product/patent coverage may be accessed at www.onsemi.com/site/pdf/Patent−Marking.pdf. **onsemi** reserves the right to make changes at any time to any products or information herein, without notice. The information herein is provided "as−is" and **onsemi** makes no warranty, representation or guarantee regarding the accuracy of the information, product features, availability, functionality, or suitability of its products for any particular purpose, nor does **onsemi** assume any liability arising out of the application or use of any product or circuit, and specifically disclaims any and all liability, including without limitation special, consequential or incidental damages. Buyer is responsible for its products and applications using **onsemi** products, including compliance with all laws, regulations and safety requirements or standards, regardless of any support or applications information provided by **onsemi**. "Typical" parameters which may be provided in **onsemi** data sheets and/or specifications can and do vary in different applications and actual performance may vary over time. All operating parameters, including "Typicals" must be validated for each customer application by customer's technical experts. **onsemi** does not convey any license under any of its intellectual property rights nor the rights of others. **onsemi** products are not designed, intended, or authorized for use as a critical component in life support systems or any FDA Class 3 medical devices or medical devices with a same or similar classification in a foreign jurisdiction or any devices intended for implantation in the human body. Should Buyer purchase or use **onsemi** products for any such unintended or unauthorized application, Buyer shall indemnify and hold **onsemi** and its officers, employees, subsidiaries, affiliates, and distributors harmless against all claims, costs, damages, and expenses, and reasonable attorney fees arising out of, directly or indirectly, any claim of personal injury or death associated with such unintended or unauthorized use, even if such claim alleges that **onsemi** was negligent regarding the design or manufacture of the part. **onsemi** is an Equal Opportunity/Affirmative Action Employer. This literature is subject to all applicable copyright laws and is not for resale in any manner.

ADDITIONAL INFORMATION

TECHNICAL PUBLICATIONS:
Technical Library: www.onsemi.com/design/resources/technical−documentation
onsemi Website: www.onsemi.com

ONLINE SUPPORT: www.onsemi.com/support
For additional information, please contact your local Sales Representative at
www.onsemi.com/support/sales