NSDEMN11XV6T1, NSDEMN11XV6T5

Common Cathode Quad Array Switching Diode

This Common Cathode Epitaxial Planar Quad Diode is designed for use in ultra high speed switching applications. This device is housed in the SOT−563 package which is designed for low power surface mount applications, where board space is at a premium.

Features

- Fast t_{rr}
- Low C_D
- Pb−Free Packages are Available

MAXIMUM RATINGS (T_A = 25°C)

Rating	Symbol	Value	Unit
Reverse Voltage	V_R	80	Vdc
Peak Reverse Voltage	V_{RM}	80	Vdc
Forward Current	I_F	100	mAdc
Peak Forward Current	I_{FM}	300	mAdc
Peak Forward Surge Current	I_{FSM} (Note 1)	2.0	Adc

THERMAL CHARACTERISTICS

Characteristic (One Junction Heated)	Symbol	Max	Unit
Total Device Dissipation @T_A = 25°C Derate above 25°C	P_D	357 (Note 2) 2.9 (Note 2)	mW mW/°C
Thermal Resistance, Junction-to-Ambient	$R_{\theta JA}$	350 (Note 2)	°C/W
Characteristic (Both Junctions Heated)	**Symbol**	**Max**	**Unit**
Total Device Dissipation @T_A = 25°C Derate above 25°C	P_D	500 (Note 2) 4.0 (Note 2)	mW mW/°C
Thermal Resistance, Junction-to-Ambient	$R_{\theta JA}$	250 (Note 2)	°C/W
Junction and Storage Temperature	T_J, T_{stg}	−55 to +150	°C

Stresses exceeding Maximum Ratings may damage the device. Maximum Ratings are stress ratings only. Functional operation above the Recommended Operating Conditions is not implied. Extended exposure to stresses above the Recommended Operating Conditions may affect device reliability.

1. t = 1 μS
2. FR−4 @ Minimum Pad

ON Semiconductor®

http://onsemi.com

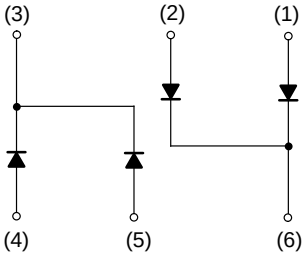

SOT−563
CASE 463A
PLASTIC

MARKING DIAGRAM

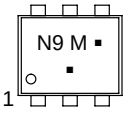

N9 = Specific Device Code
M = Date Code
▪ = Pb−Free Package
(Note: Microdot may be in either location)

ORDERING INFORMATION

Device	Package	Shipping†
NSDEMN11XV6T1	SOT−563	4000/Tape & Reel
NSDEMN11XV6T1G	SOT−563 (Pb−Free)	4000/Tape & Reel
NSDEMN11XV6T5	SOT−563	8000/Tape & Reel
NSDEMN11XV6T5G	SOT−563 (Pb−Free)	8000/Tape & Reel

†For information on tape and reel specifications, including part orientation and tape sizes, please refer to our Tape and Reel Packaging Specifications Brochure, BRD8011/D.

© Semiconductor Components Industries, LLC, 2006

ELECTRICAL CHARACTERISTICS (T_A = 25°C)

Characteristic	Symbol	Condition	Min	Max	Unit
Reverse Voltage Leakage Current	I_R	V_R = 70 V	−	0.1	μAdc
Forward Voltage	V_F	I_F = 100 mA	−	1.2	Vdc
Reverse Breakdown Voltage	V_R	I_R = 100 μA	80	−	Vdc
Diode Capacitance	C_D	V_R = 6.0 V, f = 1.0 MHz	−	3.5	pF
Reverse Recovery Time	t_{rr} (Note 3)	I_F = 5.0 mA, V_R = 6.0 V, R_L = 100 Ω, I_{rr} = 0.1 I_R	−	4.0	ns

3. t_{rr} Test Circuit on following page.

TYPICAL ELECTRICAL CHARACTERISTICS

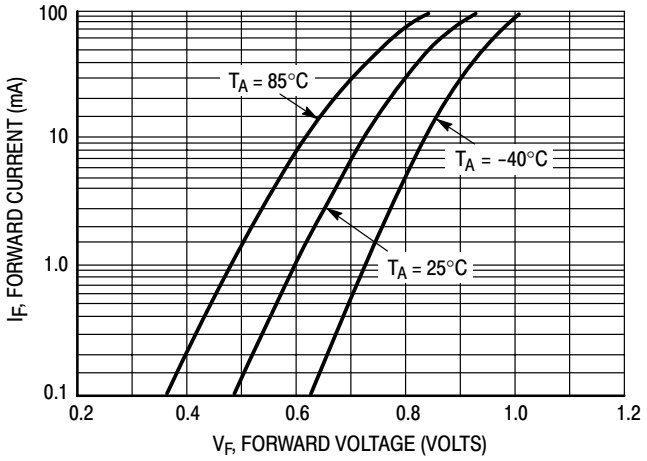

Figure 1. Forward Voltage

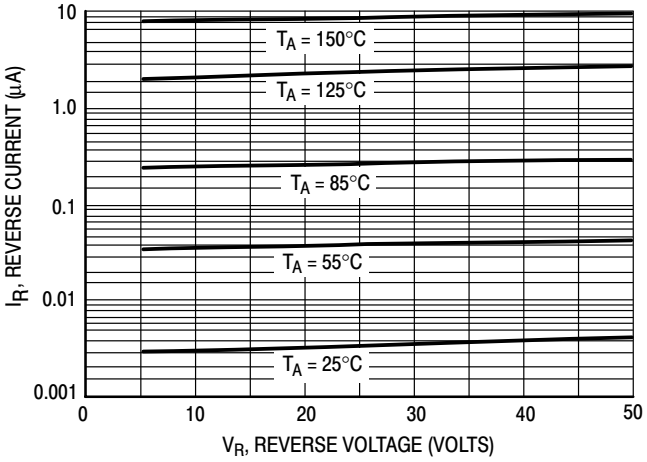

Figure 2. Reverse Current

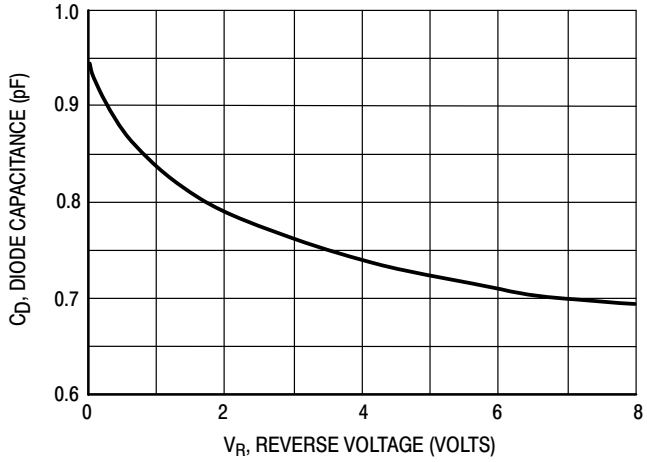

Figure 3. Diode Capacitance

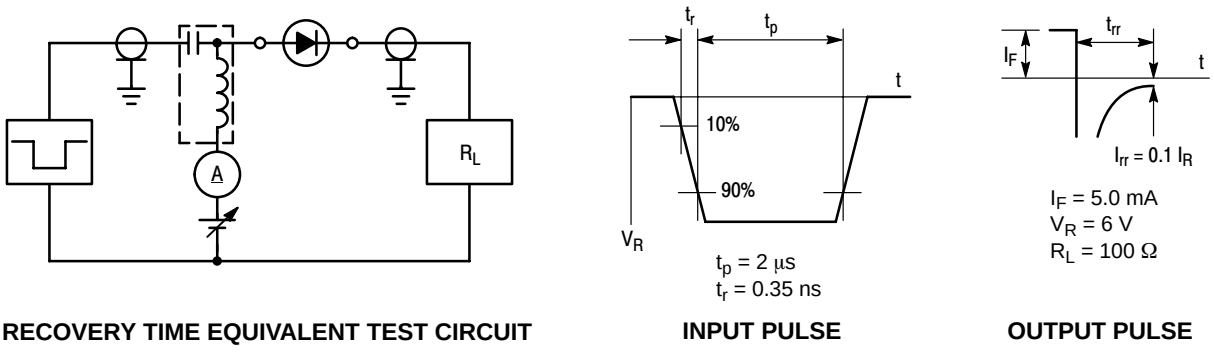

RECOVERY TIME EQUIVALENT TEST CIRCUIT **INPUT PULSE** **OUTPUT PULSE**

Figure 4. Reverse Recovery Time Test Circuit for the NSDEMN11XV6T1

MECHANICAL CASE OUTLINE
PACKAGE DIMENSIONS

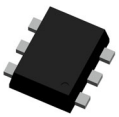

SOT−563−6 1.60x1.20x0.55, 0.50P
CASE 463A
ISSUE J

DATE 15 FEB 2024

NOTES:
1. DIMENSIONING AND TOLERANCING CONFORM TO ASME Y14.5−2018.
2. ALL DIMENSION ARE IN MILLIMETERS.
3. MAXIMUM LEAD THICKNESS INCLUDES LEAD FINISH THICKNESS. MINIMUM LEAD THICKNESS IS THE MINIMUM THICKNESS OF BASE MATERIAL.

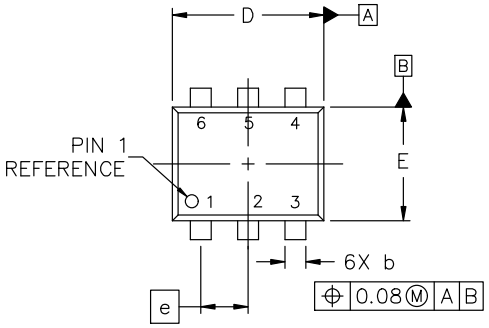

TOP VIEW

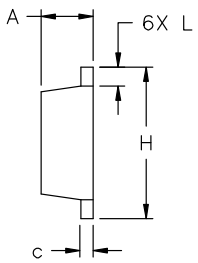

SIDE VIEW

DIM	MILLIMETERS		
	MIN.	NOM.	MAX.
A	0.50	0.55	0.60
b	0.17	0.22	0.27
c	0.08	0.13	0.18
D	1.50	1.60	1.70
E	1.10	1.20	1.30
e	0.50 BSC		
H	1.50	1.60	1.70
L	0.10	0.20	0.30

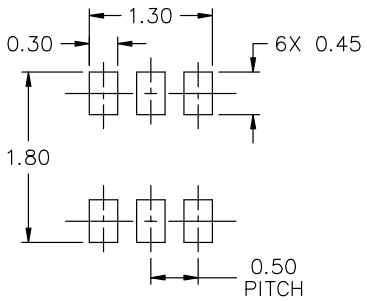

RECOMMENDED MOUNTING FOOTPRINT*

* FOR ADDITIONAL INFORMATION ON OUR Pb−FREE STRATEGY AND SOLDERING DETAILS, PLEASE DOWNLOAD THE ON SEMICONDUCTOR SOLDERING AND MOUNTING TECHNIQUES REFERENCE MANUAL, SOLDERRM/D.

STYLE 1:
PIN 1. EMITTER 1
2. BASE 1
3. COLLECTOR 2
4. EMITTER 2
5. BASE 2
6. COLLECTOR 1

STYLE 2:
PIN 1. EMITTER 1
2. EMITTER 2
3. BASE 2
4. COLLECTOR 2
5. BASE 1
6. COLLECTOR 1

STYLE 3:
PIN 1. CATHODE 1
2. CATHODE 1
3. ANODE/ANODE 2
4. CATHODE 2
5. CATHODE 2
6. ANODE/ANODE 1

STYLE 4:
PIN 1. COLLECTOR
2. COLLECTOR
3. BASE
4. EMITTER
5. COLLECTOR
6. COLLECTOR

STYLE 5:
PIN 1. CATHODE
2. CATHODE
3. ANODE
4. ANODE
5. CATHODE
6. CATHODE

STYLE 6:
PIN 1. CATHODE
2. ANODE
3. CATHODE
4. CATHODE
5. CATHODE
6. CATHODE

STYLE 7:
PIN 1. CATHODE
2. ANODE
3. CATHODE
4. CATHODE
5. ANODE
6. CATHODE

STYLE 8:
PIN 1. DRAIN
2. DRAIN
3. GATE
4. SOURCE
5. DRAIN
6. DRAIN

STYLE 9:
PIN 1. SOURCE 1
2. GATE 1
3. DRAIN 2
4. SOURCE 2
5. GATE 2
6. DRAIN 1

STYLE 10:
PIN 1. CATHODE 1
2. N/C
3. CATHODE 2
4. ANODE 2
5. N/C
6. ANODE 1

STYLE 11:
PIN 1. EMITTER 2
2. BASE 2
3. COLLECTOR 1
4. EMITTER 1
5. BASE 1
6. COLLECTOR 2

GENERIC MARKING DIAGRAM*

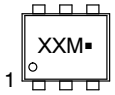

XX = Specific Device Code
M = Month Code
▪ = Pb−Free Package

*This information is generic. Please refer to device data sheet for actual part marking. Pb−Free indicator, “G” or microdot “▪”, may or may not be present. Some products may not follow the Generic Marking.

DOCUMENT NUMBER:	98AON11126D	Electronic versions are uncontrolled except when accessed directly from the Document Repository. Printed versions are uncontrolled except when stamped “CONTROLLED COPY” in red.
DESCRIPTION:	SOT−563−6 1.60x1.20x0.55, 0.50P	PAGE 1 OF 1

onsemi and onsemi are trademarks of Semiconductor Components Industries, LLC dba **onsemi** or its subsidiaries in the United States and/or other countries. **onsemi** reserves the right to make changes without further notice to any products herein. **onsemi** makes no warranty, representation or guarantee regarding the suitability of its products for any particular purpose, nor does **onsemi** assume any liability arising out of the application or use of any product or circuit, and specifically disclaims any and all liability, including without limitation special, consequential or incidental damages. **onsemi** does not convey any license under its patent rights nor the rights of others.

© Semiconductor Components Industries, LLC, 2019

onsemi, ONSEMI , and other names, marks, and brands are registered and/or common law trademarks of Semiconductor Components Industries, LLC dba "**onsemi**" or its affiliates and/or subsidiaries in the United States and/or other countries. **onsemi** owns the rights to a number of patents, trademarks, copyrights, trade secrets, and other intellectual property. A listing of **onsemi**'s product/patent coverage may be accessed at www.onsemi.com/site/pdf/Patent−Marking.pdf. **onsemi** reserves the right to make changes at any time to any products or information herein, without notice. The information herein is provided "as−is" and **onsemi** makes no warranty, representation or guarantee regarding the accuracy of the information, product features, availability, functionality, or suitability of its products for any particular purpose, nor does **onsemi** assume any liability arising out of the application or use of any product or circuit, and specifically disclaims any and all liability, including without limitation special, consequential or incidental damages. Buyer is responsible for its products and applications using **onsemi** products, including compliance with all laws, regulations and safety requirements or standards, regardless of any support or applications information provided by **onsemi**. "Typical" parameters which may be provided in **onsemi** data sheets and/or specifications can and do vary in different applications and actual performance may vary over time. All operating parameters, including "Typicals" must be validated for each customer application by customer's technical experts. **onsemi** does not convey any license under any of its intellectual property rights nor the rights of others. **onsemi** products are not designed, intended, or authorized for use as a critical component in life support systems or any FDA Class 3 medical devices or medical devices with a same or similar classification in a foreign jurisdiction or any devices intended for implantation in the human body. Should Buyer purchase or use **onsemi** products for any such unintended or unauthorized application, Buyer shall indemnify and hold **onsemi** and its officers, employees, subsidiaries, affiliates, and distributors harmless against all claims, costs, damages, and expenses, and reasonable attorney fees arising out of, directly or indirectly, any claim of personal injury or death associated with such unintended or unauthorized use, even if such claim alleges that **onsemi** was negligent regarding the design or manufacture of the part. **onsemi** is an Equal Opportunity/Affirmative Action Employer. This literature is subject to all applicable copyright laws and is not for resale in any manner.

ADDITIONAL INFORMATION

TECHNICAL PUBLICATIONS:
Technical Library: www.onsemi.com/design/resources/technical−documentation
onsemi Website: www.onsemi.com

ONLINE SUPPORT: www.onsemi.com/support
For additional information, please contact your local Sales Representative at
www.onsemi.com/support/sales