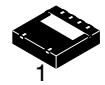

SCALE 2:1

DFN6 3.3x3.3, 0.65P
CASE 506DF
ISSUE B

DATE 23 JUN 2016

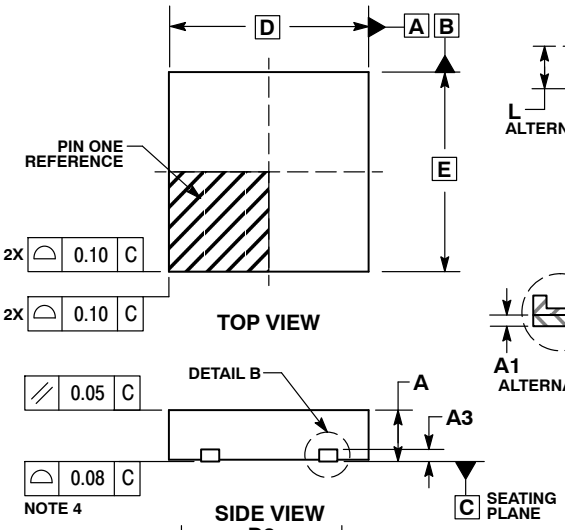

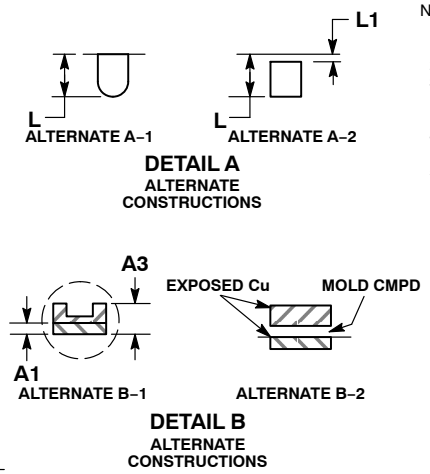

NOTES:
1. DIMENSIONING AND TOLERANCING PER ASME Y14.5M, 1994.
2. CONTROLLING DIMENSION: MILLIMETERS.
3. DIMENSION b APPLIES TO PLATED TERMINAL AND IS MEASURED BETWEEN 0.15 AND 0.30MM FROM THE TERMINAL TIP..
4. COPLANARITY APPLIES TO THE EXPOSED PAD AS WELL AS THE TERMINALS.
5. FOR DEVICE OPN CONTAINING W OPTION, DETAIL A ALTERNATE CONSTRUCTION A–2 AND DETAIL B ALTERNATE CONSTRUCTION B–2 ARE NOT APPLICABLE.

	MILLIMETERS	
DIM	MIN	MAX
A	0.80	0.90
A1	0.00	0.05
A3	0.20 REF	
b	0.25	0.35
D	3.30 BSC	
D2	2.55	2.75
E	3.30 BSC	
E2	1.00	1.20
E3	0.50 BSC	
e	0.65 BSC	
L	0.35	0.45
L1	0.00	0.15
L2	0.20 REF	

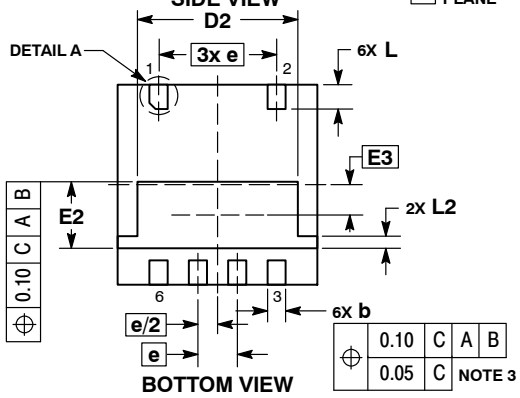

GENERIC MARKING DIAGRAM*

A = Assembly Location
Y = Year
WW = Work Week
▪ = Pb–Free Package

(Note: Microdot may be in either location)

*This information is generic. Please refer to device data sheet for actual part marking. Pb–Free indicator, “G” or microdot “ ▪”, may or may not be present.

RECOMMENDED SOLDERING FOOTPRINT*

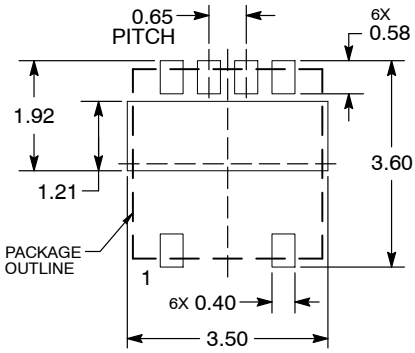

DIMENSIONS: MILLIMETERS

*For additional information on our Pb–Free strategy and soldering details, please download the ON Semiconductor Soldering and Mounting Techniques Reference Manual, SOLDERRM/D.

DOCUMENT NUMBER:	98AON09329G	Electronic versions are uncontrolled except when accessed directly from the Document Repository. Printed versions are uncontrolled except when stamped “CONTROLLED COPY” in red.
DESCRIPTION:	DFN6 3.3X3.3, 0.65P	PAGE 1 OF 1

ON Semiconductor and ON are trademarks of Semiconductor Components Industries, LLC dba ON Semiconductor or its subsidiaries in the United States and/or other countries. ON Semiconductor reserves the right to make changes without further notice to any products herein. ON Semiconductor makes no warranty, representation or guarantee regarding the suitability of its products for any particular purpose, nor does ON Semiconductor assume any liability arising out of the application or use of any product or circuit, and specifically disclaims any and all liability, including without limitation special, consequential or incidental damages. ON Semiconductor does not convey any license under its patent rights nor the rights of others.

© Semiconductor Components Industries, LLC, 2019