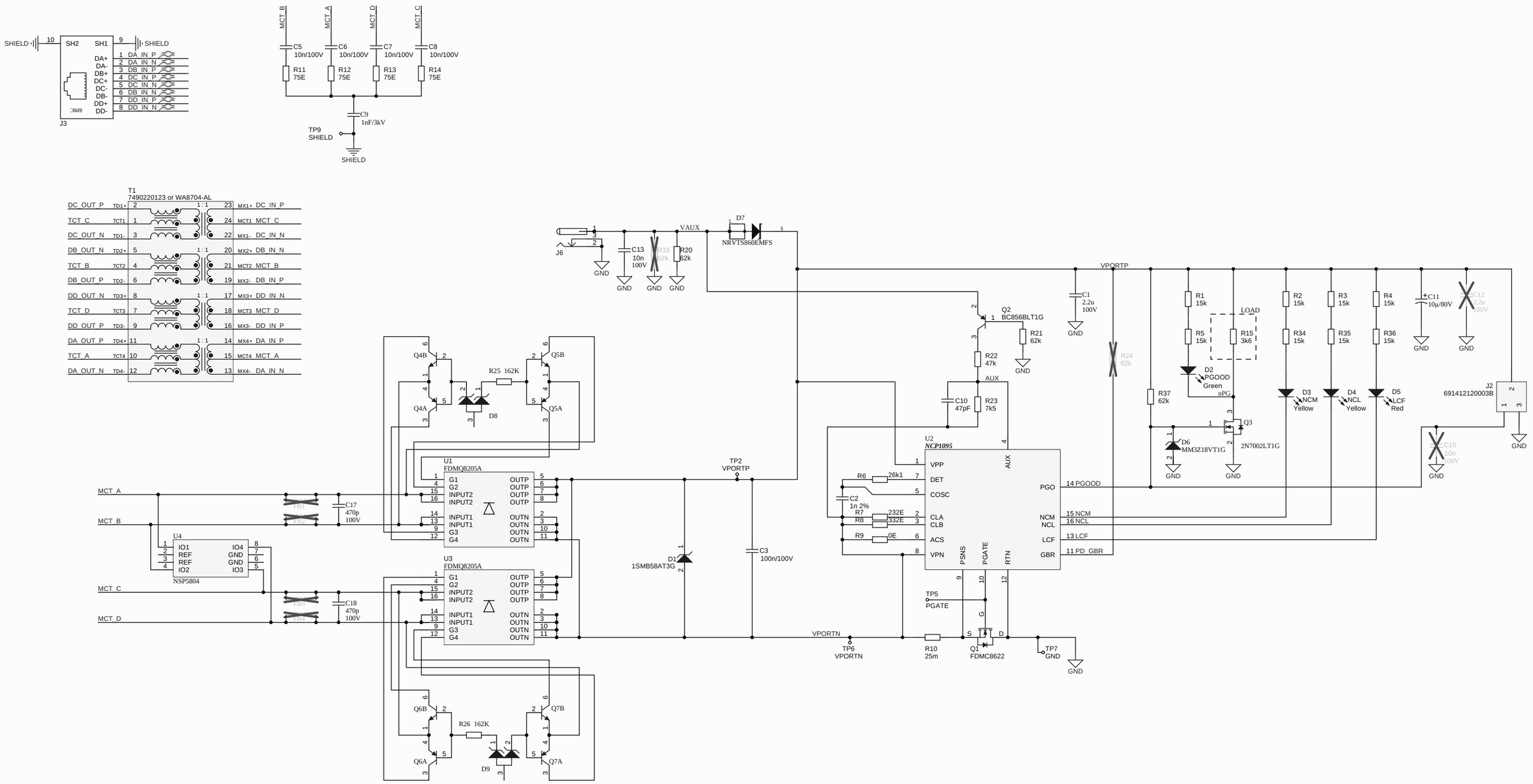

ON Semiconductor — Energy Management Products

NCP1095 Evaluation Board

Board NCP109Xbt

Variant B: NCP1095-EVAL

Design Joris Lemahieu

Revision 1.1

Date 27/11/2018

Size A3

Sheet 1 of 1