ON Semiconductor
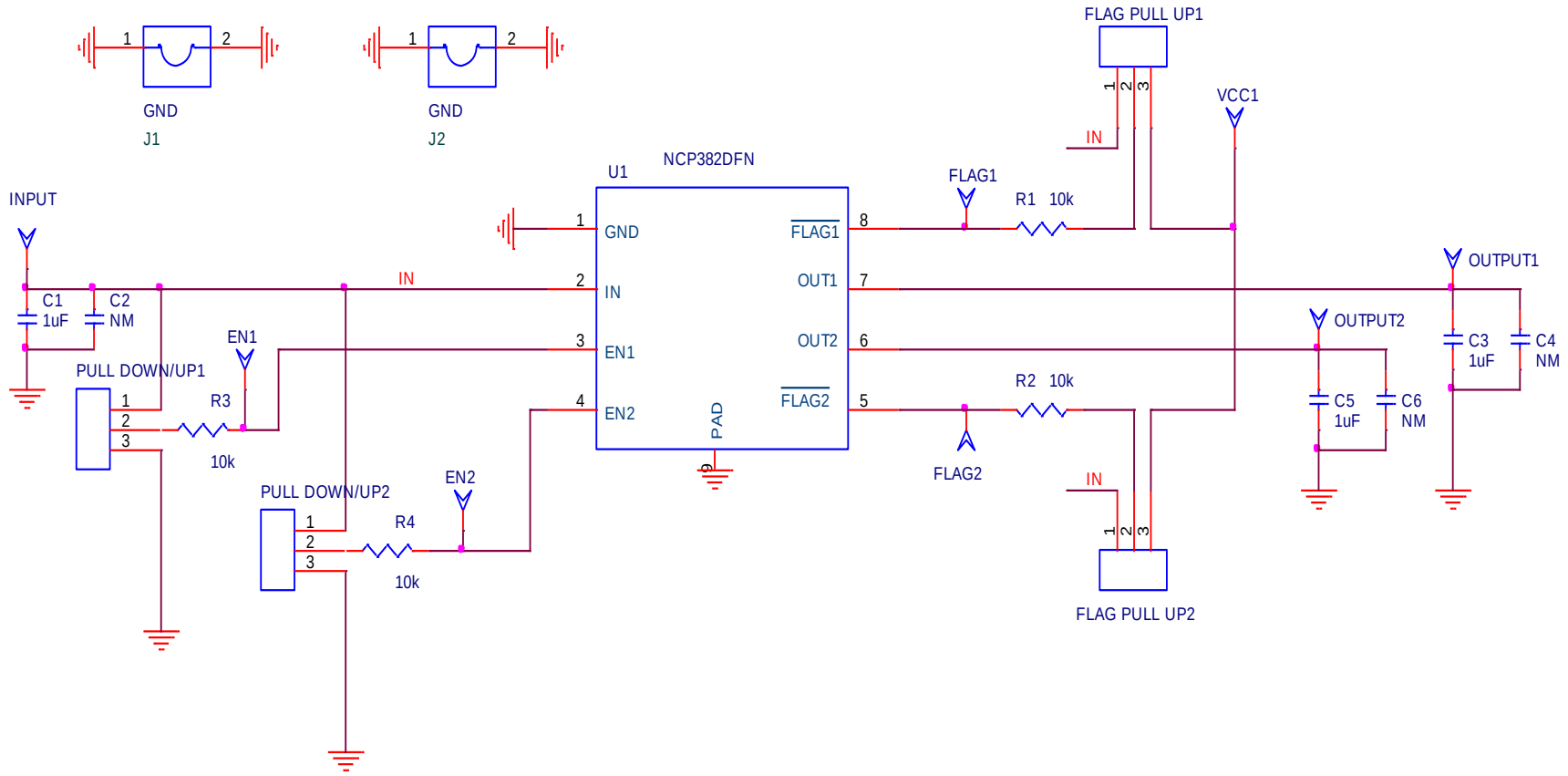
Schematic for the NCP382LMN15AGEVB Evaluation Board